SIEMENS

7435



Burner Controls LGB...

Burner controls for the supervision, startup and control of 1- or 2-stage gas burners.
As well as for gas burners of small to medium capacity (typically up to 350 kW), with or without fan in intermittent operation.

The LGB and this Data Sheet are intended for use by OEMs which integrate the burner controls in their products!

Use, features

Use

The LGBs are used for the startup and supervision of 1-stage or 2-stage gas burners or gas burners in intermittent operation.
Depending on the type of burner control used, the flame is supervised either by an ionization probe, a blue-flame detector QRC1 for forced draft gas burners, or a UV flame detector QRA (with ancillary unit AGQ1.xA27).
Using the appropriate adapter, the LGB can replace the predecessor types LFI7 and LFM1 in terms of function (refer to *Replacement types* under *Ordering*).

- Applications in accordance with EN 676: Automatic forced draft burners for gaseous fuels
- Type-tested in accordance with EN 298: 1994-02 or EN 298: 1993

ПРОМЭЛЕКТРОНИКА / sales@prom-elec.com

Use, features (continued)

General features

- Undervoltage detection
- Air pressure supervision with function check of the air pressure switch during startup and operation
- Electrical remote reset facility

Undervoltage detection

In the event that the mains voltage drops below about AC 165 V, an electronic circuit ensures that the gas burner control will prevent burner startup or – without releasing fuel – lockout will be initiated.

Special features

LGB41 for use with atmospheric gas burners.

Note!
Do not use for new designs.

Note!
The following burner controls can be used for new designs:

- LME1
- LME2
- LME3
- LME4

Warning notes

To avoid injury to persons, damage to property or the environment, the following warning notes must be observed!

Do not to open, interfere with or modify the unit!

- All activities (mounting, installation and service work, etc.) must be performed by qualified staff
- Before performing any wiring changes in the connection area of the LGB, completely isolate the plant from the mains supply (all-polar disconnection). Ensure that the plant cannot be inadvertently switched on again and that it is indeed dead. If not disconnected, there is a risk of electric shock hazard
- Ensure protection against electric shock hazard by providing adequate protection for the burner control's connection terminals. If not observed, there will be a risk of electric shock
- Each time work has been carried out (mounting, installation, service work, etc.), check to ensure that wiring is in an orderly state and make the safety checks as described in *Commissioning notes*. If not observed, the safety functions are no longer ensured and there will be a risk of electric shock
- Press the lockout reset button only manually (apply a force of no more than 10 N), without using any tools or pointed objects. If not observed, the safety functions are no longer ensured and there will be a risk of electric shock
- Fall or shock can adversely affect the safety functions. Such units must not be put into operation, even if they do not exhibit any damage. If not observed, the safety functions are no longer ensured and there will be a risk of electric shock

Attention!
Earth the burner in compliance with the relevant regulations; earthing the boiler alone does not suffice!

Mounting notes

Ensure that the relevant national safety regulations are complied with.

- Always run the ignition cables separate from the unit and other cables while observing the greatest possible distance
- Make absolutely certain that live and neutral conductors are correctly connected to terminals 1 and 2 of the burner control; otherwise, no flame signal will be generated
- Install switches, fuses, earthing, etc., in compliance with local regulations
- Ensure that the maximum permissible current load for the connecting terminals is not exceeded, refer to *Technical data*
- The connection diagrams show the burner controls with earthed neutral conductor. In networks with nonearthed neutral conductor and ionization current supervision, terminal 2 must be connected to the earth conductor via an RC unit (type reference ARC 4 668 9066 0). It must be made certain that local regulations are complied with (e.g. protection against electric shock hazard) since AC 230 V / 50 Hz mains voltage produces peak leakage currents of 2.7 mA
- Do not feed external mains voltage to the control outputs of the unit. When testing the devices controlled by the burner control (fuel valves, etc.), the burner control must not be connected
- To isolate the burner control from the mains supply, use an all-polar switch with a contact gap of at least 3 mm
- Secure the earthing lug in the base with a metric screw and a lockwasher
- Switches, fuses, earthing, etc., must be in compliance with local regulations; primary fuse max. 6.3 A, slow
- Connect the gas pressure switch and other controller (whose contacts must be closed from startup to controlled shutdown) in series with control thermostat or pressurestat (R) and limit thermostat or temperature limiter (W)
- In the case of burners with no fan, the AGK25 must be connected to terminal 3 as a burden, or else the burner cannot reliably start
- For safety reasons, feed the neutral conductor to the neutral distributor in the plug-in base, or to terminal 2. Connect the burner components (fan, ignition transformer and fuel valves) as represented in the figure 7435a14, to the neutral distributor as shown below. The connection between neutral conductor and terminal 2 is prewired in the base

Example

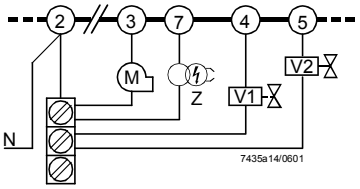

Legend

V...	Fuel valve
M	Fan motor
Z	Ignition transformer

Correct wiring of neutral conductors!

Electrical connection of flame detectors

It is important to achieve practically disturbance- and loss-free signal transmission:

- Never run detector cables together with other cables
  – Line capacitance reduces the magnitude of the flame signal
  – Use a separate cable
- Observe the permissible length of the flame detector cables (refer to *Technical data - Flame supervision* and Data sheet/ Flame detector QRA (N7712) or QRC (N7716)
- The ionization probe and the ignition electrode are not protected against electric shock hazard
- Locate the high-voltage ignition electrode and the ionization probe such that the ignition spark cannot arc over to the ionization probe (risk of electrical overloads) and that it cannot adversely affect the supervision of ionization
- With both ionization current and UV supervision, the cable length for flame detection must not exceed 20 m
- Insulation resistance
  – the insulation resistance must be >50 MΩ between ionization probe and ground
  – Soiled detector holders reduce the insulation resistance, thus supporting creepage currents

  ☞ Note!
  Recommendation:
  Use high-quality detector cables with heat-resistant insulation and an ionization probe with ceramic insulation.
- The burner (as the counter-electrode) must be correctly earthed, or else no ionization current will flow
- Only for atmospheric burners:
  Since the burner bars form the earthed counter-electrode, the burner must be adjusted so that the flame is hot and stable and in firm contact with the burner bars. With pulsating flames or yellow-burning flames resulting from lack of air, a very low or even no ionization current is generated so that the burner enters malfunction

Commissioning notes

When commissioning the plant for the first time or when doing maintenance work, make the following safety checks:

	Safety check to be carried out	Anticipated response
a)	Burner startup with previously interrupted line to the ionization probe and flame detector darkened in the case of QRA or QRC1	Lockout at the end of safety time (TSA)
b)	Burner operation with simulated loss of flame. For that purpose, cut off the gas supply (e.g. disconnect the fuel valve while ensuring protection against electric shock hazard)	Immediate lockout
c)	Burner operation with simulated air pressure failure (not with atmospheric burners)	Immediate lockout

ПРОМЭЛЕКТРОНИКА / sales@prom-elec.com

Standards and certificates

Applied directives:

- Low-voltage directive 2014/35/EU
- Electromagnetic compatibility EMC (immunity) *) 2014/30/EU

*) The compliance with EMC emission requirements must be checked after the burner control is installed in equipment

Note!
These devices may only be used as replacements within the EU and EFTA countries.

Compliance with the regulations of the earlier, now withdrawn directives is verified by the adherence to the following standards:

- Automatic burner control systems for burners and appliances burning gaseous or liquid fuels — DIN EN 298:1994
- Automatic electrical controls for household and similar use
  Part 2-5:
  Particular requirements for automatic electrical burner control systems — DIN EN 60730-2-5:1995

EAC Conformity mark (Eurasian Conformity mark)

ISO 9001:2015
ISO 14001:2015
OHSAS 18001:2007

China RoHS
Hazardous substances table:
http://www.siemens.com/download?A6V10883536

Note on **DIN EN 60335-2-102**
Household and similar electrical appliances - Safety - Part 2-102:
Particular requirements for gas, oil and solid-fuel burning appliances having electrical connections.
The electrical connections of the LGB and the AGK11 are suitable for use in devices that conform to the requirements of EN 60335-2-102.

Service notes

The service adapters may only be used for a short time. They may only be used in supervised operation by qualified staff.

Life cycle

Burner controls has a designed lifetime* of 250,000 burner startup cycles which, under normal operating conditions in heating mode, correspond to approx. 10 years of usage (starting from the production date given on the type field).

This lifetime is based on the endurance tests in the standard EN 298.
A summary of the conditions has been published by the European Control Manufacturers Association (Afecor) (www.afecor.org).

The designed lifetime is based on use of the burner controls according to the manufacturer's Data Sheet. After reaching the designed lifetime in terms of the number of burner startup cycles, or the respective time of usage, the burner control is to be replaced by authorized personnel.

* The designed lifetime is not the warranty time specified in the Terms of Delivery

Disposal notes

The unit contains electrical and electronic components and must not be disposed of together with household waste.
Local and currently valid legislation must be observed.

Mechanical design

The burner controls are of plug-in design, suitable for installation in any position on burners, in control cabinets or on control panels.

The housing is made of impact-proof, heat-resistant and flame-retarding plastic.
It is of plug-in design (measuring 91 x 62 x 63 mm, including the base) and engages audibly in the base.
The color of plastic material of burner controls LGB are executed in black.

The housing accommodates the
- programming mechanism with the synchronous motor
- electronic flame signal amplifier (ionization) with the flame relay and the other switching devices
- lockout reset button with its integrated fault indication lamp

Type summary

The type references given in the table refer to burner controls with no plug-in base and no accessories. For ordering information on plug-in bases and other accessories, refer to *Accessories*, *Flame supervision* ... and *Technical data*.

Flame detector	Article no.	Type reference	tw s approx.	t1 s min.	TSA s max.	t3n s approx.	t3 s approx.	t4 s approx.	t9 s 6) max.	t10 s min.	t11 s 3) max.	t12 s 3) max.	t20 s approx.
Burner controls for 2-stage burners without control of actuator													
Ionization probe (ION) or UV detector QRA with AGQ1.xA27	**BPZ:LGB21.130A27**	**LGB21.130A27** 4)7)	8	7	3	2,4	2	8	---	5	---	---	6
	BPZ:LGB21.230A27	**LGB21.230A27** 5)	8	15	3	2,4	2	8	---	5	---	---	38
	BPZ:LGB21.330A27	**LGB21.330A27** 5)	8	30	3	2,4	2	8	---	5	---	---	23
	BPZ:LGB21.350A27	**LGB21.350A27** 5)7)	8	30	5	4	2	10	---	5	---	---	21
	BPZ:LGB21.550A27	**LGB21.550A27** 5)	8	50	5	4	2	10	---	5	---	---	2
Burner controls for 2-stage burners with control of actuator													
Ionization probe (ION) or UV detector QRA with AGQ1.xA27	**BPZ:LGB22.130A27**	**LGB22.130A27** 4)	9	7	3	2,4	3	8	---	4	12	12	21
	BPZ:LGB22.230B27	**LGB22.230B27** 5)	9	20	3	2,4	3	8	---	4	16,5	16,5	2
	BPZ:LGB22.330A27	**LGB22.330A27** 5)7)	9	30	3	2,4	3	8	---	4	12	11	2
	BPZ:LGB22.330A270	**LGB22.330A270** 5)8)	9	30	3	2,4	3	8	---	4	12	11	2
Blue-flame detector QRC1	**BPZ:LGB32.130A27**	**LGB32.130A27** 4)1)	9	7	3	2,4	3	8	---	4	12	12	21
	BPZ:LGB32.230A27	**LGB32.230A27** 5)1)	9	15	3	2,4	3	8	---	4	12	12	2
	BPZ:LGB32.330A27	**LGB32.330A27** 5)	9	30	3	2,4	3	8	---	4	12	11	2
	BPZ:LGB32.350A27	**LGB32.350A27** 5)	9	30	5	4,4	1	10	---	4	12	9	2
Burner controls for atmospheric burners													
Ionization probe (ION) or UV detector QRA with AGQ1.xA27	**BPZ:LGB41.255A27**	**LGB41.255A27**	18	---	5	4	2	10	5	---	---	---	10
	BPZ:LGB41.258A27	**LGB41.258A27** 2)5)7)	18	---	5	4	2	10	8	---	---	---	10

Legend

tw	Waiting time
t1	Prepurge time
TSA	Ignition safety time
t3	Preignition time
t3n	Postignition time
t4	Interval between fuel valve (BV1) and fuel valve (BV2) or fuel valve (BV1) and load controller (LR)
t9	2nd safety time
t10	Specified time for air pressure signal
t11	Programmed opening time for actuator (SA)
t12	Programmed closing time for actuator (SA)
t20	Interval up to self-shutdown of programming mechanism

1) On request
2) For atmospheric burners up to 120 kW
3) Maximum running time available for actuator
4) Also suited for flash steam generators
5) Also suited for stationary direct-fired air heaters
6) 2nd safety time (t9) + reaction time of flame relay
7) Also available for AC 100...110 V; in that case, the last 2 digits read ...17 in place of ...27
8) Without internal microfuse; must only be used in connection with external microfuse (max. 6.3 A slow)!

Service adapter (must be ordered separately)

Service adapter **KF8872**
Article no.: **BPZ:KF8872**

- For checking the functioning of the burner controls on the burner plant
- Functional test with signal lamps
- Detector resistance measurement with a jack of 4 mm diameter



Accessories (must be ordered separately)

Connection accessories for small burner controls

Plug-in base **AGK11…**
Article no.: **BPZ:AGK11**
To connect the small-capacity burner controls to the burner plant.
See Data Sheet N7201



Cable holders **AGK66…**
Article no.: **BPZ:AGK66**
For plug-in base AGK11
See Data Sheet N7201



Cable holders **AGK65…**
Article no.: **BPZ:AGK65**
For plug-in base AGK11
See Data Sheet N7201



Accessories (must be ordered separately)

Flame detectors

UV flame detectors **QRA2**
See Data Sheet N7712



UV flame detectors **QRA10**
See Data Sheet N7712



UV flame detectors **QRA4**
See Data Sheet N7711



Blue-flame detectors **QRC1**
See Data Sheet N7716

Frontal illumination



Lateral illumination:



Ionization probe
Supplied by customer



Actuators

SQN3 actuator
Refer to data sheet N7808



SQN7 actuator
Refer to data sheet N7804



SQN9 actuator
Refer to data sheet N7806



Adapters / replacement types

No rewiring required

LGB21 with adapter	**KF8852** Article no.: **BPZ:KF8852**		LFI7
	KF8880 Article no.: **BPZ:KF8880**		LFM1 [1]) LFM1...-F [1])
LGB22 with adapter	**KF8853-K** Article no.: **BPZ:KF8853-K**		LFI7
	KF8880 Article no.: **BPZ:KF8880**		LFM1 [1])
LGB41 with adapter	**KF8862** Article no.: **BPZ:KF8862**		LFM1 [1])

1) Designed only for ionization

Others

RC unit **ARC 4 668 9066 0**
Article no.: **BPZ:ARC466890660**
For the supervision of ionization currents in networks with nonearthed neutral conductor



PTC resistor (AC 230 V) **AGK25**
Article no.: **BPZ:AGK25**
To burden terminal 3 (mandatory when using burners with no fan motor connected to terminal 3)



Auxiliary unit for UV supervision
Can be fitted under the plug-in base (refer to «Dimensions»)

AGQ1.1A27: Cable length 500 mm
Article no.: **BPZ:AGQ1.1A27**

AGQ1.2A27: Cable length 300 mm
Article no.: **BPZ:AGQ1.2A27**



Technical data

General unit data
LGB

Mains voltage	
• LGB2 / LGB4	AC 220 V -15% ...AC 240 V +10%
• LGB32	AC 230 V -15% / +10%
	AC 100 V -15% ...AC 110 V +10%
Mains frequency	50...60 Hz ±6%
External primary fuse (Si)	Max. 6.3 A (slow)
Power consumption	Approx. 3 VA
Mounting position	Optional
Degree of protection	IP40, when built in, with the exception of the connection area
Safety class	I (burner control with plug-in base)
Input current at terminal 12	Max. 5 A Within the permissible voltage range AC 187...264 V or AC 195...253 V
Perm. cable lengths Detector cable laid separately	Max. 3 m at 100 pF/m line capacitance Max. 20 m (refer to Flame supervision chapter)
Cable length terminals 8 and 10	20 m at 100 pF/m
Weight	Approx. 230 g

Permissible current load at cosφ ≥0.6	
Terminal 3	Max. 3 A (15 A for max. 0.5 s)
Terminals 4, 5 and 7	Max. 2 A
Terminals 9 and 10	Max. 1 A
Terminal 12	Max. 5 A (at Umax. AC 264 V or AC 253 V)

Environmental conditions

Storage	DIN EN 60721-3-1
Climatic conditions	Class 1K3
Mechanical conditions	Class 1M2
Temperature range	-20...+60 °C
Humidity	<95% r.h.
Transport	DIN EN 60721-3-2
Climatic conditions	Class 2K3
Mechanical conditions	Class 2M2
Temperature range	-20...+60 °C
Humidity	<95% r.h.
Operation	DIN EN 60721-3-3
Climatic conditions	Class 3K3
Mechanical conditions	Class 3M2
Temperature range	-20...+60 °C
Humidity	<95% r.h.
Installation altitude	Max. 2,000 m above sea level



Warning!
Condensation, formation of ice and ingress of water are not permitted!
If not observed, the safety functions are no longer ensured and there will be a risk of electric shock.

Flame supervision

Flame supervision with ionization probe

	At mains voltage U_N = AC 230 V
Detector voltage across terminals 1 and 2 or ground (AC voltmeter Ri ≥10 MΩ)	≤ U_N
Detector current required for reliable operation	Min. 3 µA
Possible detector current in operation	Max. 100 µA

Flame supervision with ionization is accomplished by making use of the conductivity and rectifying effect of the flame.

The DC current that flows in the presence of a flame (ionization current) is largely proportional to the flame quality.
This current is measured in the flame signal amplifier.

The amplifier is designed so that it only reacts to the DC current of the flame signal. This ensures that a short-circuit between ionization probe and ground cannot simulate a flame signal (since in that case, AC current would flow).

Note!
The ignition (ignition spark) can have a negative effect on the ionization current formation during startup.

To minimize the impact
- the positioning of the ionization probe must be checked and optimized
- it may be beneficial to replace the electrical connections (phase / neutral) on the primary side of the ignition transformer

A short-circuit between ionization probe and ground initiates a non-alterable lockout.

Ionization current supervision with burner controls operating on AC 110 V

Since the ionization current with burner controls operating on AC 110 V is only about 50% of those operating on AC 230 V, certain applications make it necessary to increase the ionization current with a transformer.

Capacity of transformer: Min. 2 VA
Transforming ratio: Approx. 1.1...1.5
The primary and secondary windings of the transformer must be galvanically separated.

Connection of transformer

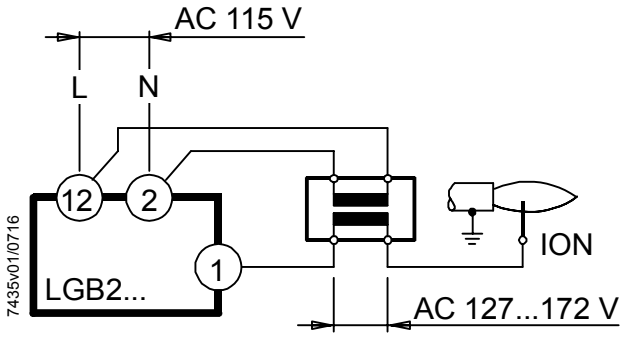

Flame supervision with blue-flame detector QRC1

Perm. detector current during the prepurge time (dark current) (without flame)	Max. 5 µA
Detector current required during operation (with flame)	Min. 50 µA
Possible detector current in operation (with flame)	Max. 80 µA

Measuring circuit for detector current measurement

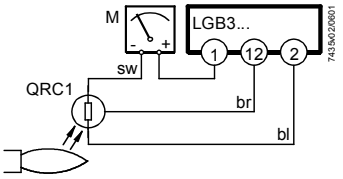

Legend

M	Microammeter Ri max. 5000 Ω
sw	Black wire
br	Brown wire
bl	Blue wire

The QRC1 has been designed specifically for blue-burning flames. Incidence of light is from the front and laterally. The flame detector is secured by means of a soft plastic plug. 3-core connection (preamplifier integrated in the detector casing). For the different types of flame detectors, engineering notes and technical data, refer to Data Sheet N7716.

Flame supervision with UV detector QRA and AGQ1.xA27 for LGB21 / LGB22 / LGB41

Mains voltage	AC 220 V -15%...AC 240 V +10%
Mains frequency	50...60 Hz ±6%
Power consumption	4.5 VA
Degree of protection	IP40
Perm. ambient temperature	
- In operation	-20...+60 °C
- During transport and storage	-40...+70 °C
Perm. length of cable from QRA to AGQ1.xA27 (use separate cable)	Max. 20 m
Mounting position	Optional
Perm. length of connecting cable from AGQ1.xA27 to LGB	Max. 20 m
Weight of AGQ1.xA27	Approx. 140 g

	At mains voltage UN:	
	AC 220 V	AC 240 V
Detector voltage at QRA (with no load)		
Up to the end of specified time (t10) and after controlled shutdown	DC 400 V	DC 400 V
From the beginning of prepurge time (t1)	DC 300 V	DC 300 V
Detector voltage		
Load by DC measuring instrument Ri >10 MΩ		
Up to the end of specified time (t10) and after controlled shutdown	DC 380 V	DC 380 V
From the beginning of prepurge time (t1)	DC 280 V	DC 280 V
DC detector signals with UV detector QRA	**Min. required**	**Max. possible**
Measurement on the QRA	200 µA	500 µA

Flame supervision with UV detector QRA and auxiliary unit AGQ1.xA27 for LGB21 / LGB22 / LGB41

UV detector QRA

A universal flame detector for use with gas burners.
Incidence of light from the front and laterally, total length 97 mm. Available with normal or, as QRA2M, with higher sensitivity. Secured with flange and clamp. Also available as a metal encapsulated version in the form of the QRA10 (for details, refer to Data Sheet N7712).

Auxiliary unit AGQ1.xA27

A special UV auxiliary unit AGQ1.xA27 is required in connection with LGB burner controls.

That unit is to be connected to the mains supply via 2 cables, and to the burner control via terminals 1, 2 and 11.

The following option is available to check the through-ignition tendency of aging cells and detecting the UV light:

Operation with a permanent line:
UV test at a higher supply voltage across the UV cell on startup and after controlled shutdown.

Measuring circuit

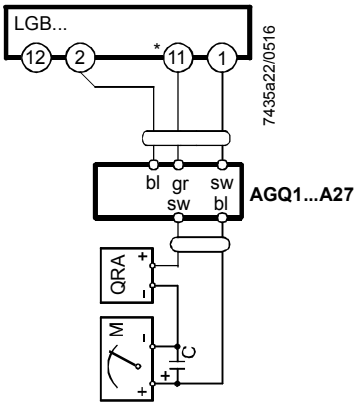

Connection diagram

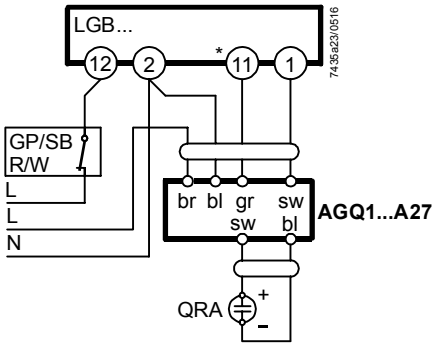

Measurement made on the flame detector

Legend

GP	Gas pressure switch
R	Temperature or pressure controller
SB	Safety limit thermostat
W	Limit thermostat or pressure switch
*	With LGB41: Terminal 3
bl	blue
br	brown
gr	grey (old: rt = red)
sw	black

The function diagrams show the required or permissible input signals to the control section and to the flame supervision circuit hatched (refer to *Connection diagrams).*
If these input signals are not present, the burner control will stop the startup sequence to trigger lockout where required by safety regulations.

Preconditions for burner startup

- Burner control must be reset
- The contacts of gas pressure switch (GP), limit thermostat / pressure switch (W), control thermostat / pressurestat ® and safety limit thermostat (SB) must be closed
- Fan motor (M) or AGK25 must be connected, Heat request present on terminal 12
- Air pressure switch (LP) must be in its no load position
- No undervoltage
- Flame detector darkened, no extraneous light
- No flame signal, optical flame detector (QRA or QRC) darkened, no extraneous light

Undervoltage detection

LGB burner controls are capable of detecting **undervoltages**. This means that load relay (AR) will be deenergized if mains voltage drops below AC 160 V (for nominal AC 220...240 V) or AC 75 V (for nominal AC 100...110 V).
The burner control will automatically make a restart attempt when the supply voltage returns to a level above AC 160 V and AC 75 V respectively.

Reversed polarity protection

If the connections of live conductor (terminal 12) and neutral conductor (terminal 2) are mixed up, the burner control will initiate lockout at the end of safety time (TSA).

Startup sequence

A – C Startup sequence

A **Start command** (switching on)
This command is triggered by control thermostat / pressurestat ®.
Terminal 12 receives voltage and the programming mechanism starts running.
On completion of waiting time «tw» with the LGB21, or after air damper (SA) has reached the nominal load position (on completion of opening time (t11)) with the LGB22 / LGB32, fan motor (M) will be started.

TSA **Ignition safety time**
On completion of safety time (TSA), a flame signal must be present at terminal 1. That flame signal must be continuously available until shutdown occurs, or else flame relay (FR) will be deenergized, resulting in lockout.

tw **Waiting time**
During the waiting time, air pressure switch (LP) and flame relay (FR) are tested for correct contact positions.

t1 **Prepurge time**
Purging the combustion chamber and the secondary heating surfaces:
Required with low-fire air volumes when using the LGB21 and with nominal load air volumes when using the **LGB22 / LGB32**
Type summary and the *Function and sequence diagrams* show the so-called **prepurge time (t1)** during which air pressure switch (LP) must indicate that the required air pressure is available.
The effective prepurge time (t1) comprises interval end waiting time (tw) through preignition time (t3).

t3 **Preignition time**
During preignition time (t3) and up to the end of safety time (TSA), flame relay (FR) is forced to close.
On completion of preignition time (t3), the release of fuel is triggered at terminal 4 or at terminal 11 of the LGB41

t3n **Postignition time**
Ignition time during safety time TSA)
Just before reaching the end of safety time (TSA), ignition transformer (Z) will be switched off.
This means that postignition time (t3n) is somewhat shorter than safety time (TSA).
This is necessary in order to give the forcedly closed flame relay (FR) sufficient time to drop out if there is no flame.

t4 **Interval**
LGB21 / LGB41: Time to the release of the 2nd fuel valve (BV2)
LGB22 / LGB32: On completion of interval (t4), the heat source is controlled depending on the load (release of load controller (LR))

t9 **Second safety time**
(Only with LGB41)
For pilot burners with main flame supervision equipped with a pilot gas valve (ZV1).

t10 **Specified time for air pressure signal**
On completion of this period of time, the set air pressure must have built up, or else lockout will occur.

t11 **Programmed opening time for actuator (SA)**
(Only with LGB22 / LGB32)
The air damper opens until the nominal load position is reached. Only then will fan motor (M) be switched on.

t12 **Programmed closing time for actuator (SA)**
(Only with LGB22 / LGB32)
During closing time (t12), the air damper travels to the low-fire position.

B – B´ **Interval for establishment of flame**

C **Burner operating position reached**

C – D **Burner operation** (generation of heat)
Nominal output or, in connection with a load controller (LR), low-fire operation.

D **Shutdown by control thermostat or pressurestat (R)**
The burner is immediately shut down and the programming mechanism is ready for a new start.

Control sequence in the event of fault

If lockout occurs, the outputs for the fuel valves, the burner motor and the ignition equipment are immediately deactivated (<1 second).
The lockout indication lamp changes to red and voltage is fed to terminal 10 (Alarm) for remote lockout indication.
This state will also be maintained in the event of power failures.

Cause	Response
After a mains failure or in the event of undervoltage:	New startup with full program sequence on power restoration
Premature flame signal from the start of prepurge time (t1):	Immediate lockout
Contacts of air pressure switch (LP) have welded during waiting time (tw):	Prevention of startup
No air pressure signal:	Lockout on completion of specified time (t10)
Air pressure failure on completion of specified time (t10):	Immediate lockout
Burner does not ignite:	Lockout on completion of safety time (TSA)
Flame is lost during operation:	Immediate lockout

Lockout

After lockout, the LGB will remain locked (lockout cannot be changed).
This state will also be maintained in the event of mains voltage failure.

Resetting the burner control

Whenever lockout occurs, the burner control can immediately be reset.

Lockout and control sequence indication

The position of the programming mechanism can be seen through the viewing window on the front of the unit. In the event of fault, the programming mechanism stops and thus the lockout indicator also. The symbol in the viewing window indicates both the position in the control sequence and the type of fault according to the following legend:

◀ No heat request present on terminal 12

IIII Interval waiting time (tw) or specified time (t10) (LGB21)
Interval waiting time (tw) or opening time (t11) (LGB22 / LGB32)
Interval waiting time (tw), preignition time (t3) or safety time (TSA) (LGB41)

▲ Air damper fully open (LGB22 / LGB32)

P Lockout due to absence of air pressure signal

←←← Interval prepurge time (t1), preignition time (t3) and safety time (TSA) (LGB21)
Interval prepurge time (t1), preignition time (t3) (closing time (t12)) (LGB22 / LGB32)

▼ Release of fuel

1 Lockout since there is no flame signal on completion of the first safety time

2 Release of 2nd fuel valve (LGB21 / LGB41)
Release of load controller (LGB22 / LGB32)

3 Lockout since there is no flame signal on completion of the 2nd safety time (LGB41)

●●●● Low-fire or high-fire operation (or return to the operating position)

LGB21

Burner controls for 1- or 2-stage forced draft burners.
Air damper control for prepurging with **low-fire air volume**.

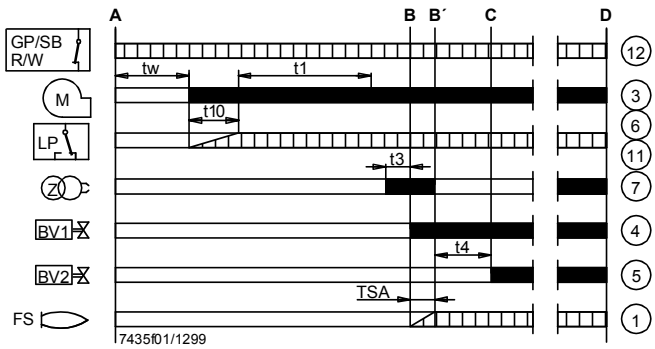

Application examples
Control of actuators of 2-stage or 2-stage modulating burners.
Prepurging (t1) with low-fire air volume.
Same low-fire actuator position (switching cam III) during startup and operation!

For information about actuators (SA):
SQN3: Refer to Data Sheet N7808
SQN7: Refer to Data Sheet N7804
SQN9: Refer to Data Sheet N7806

Flame supervision

LGB21: With ionization probe or auxiliary unit AGQ1.xA27 for UV detector QRA

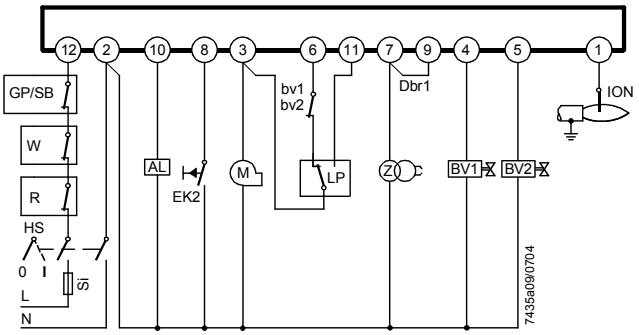

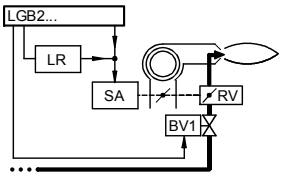

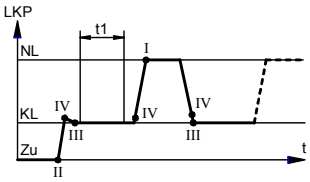

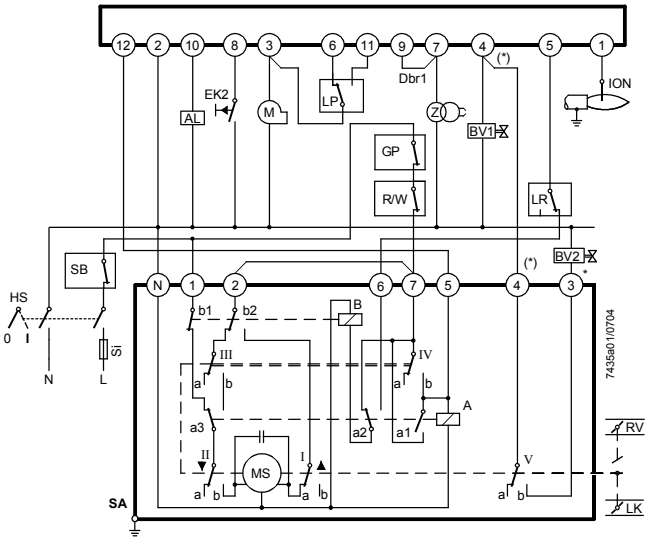

SQN3...121...

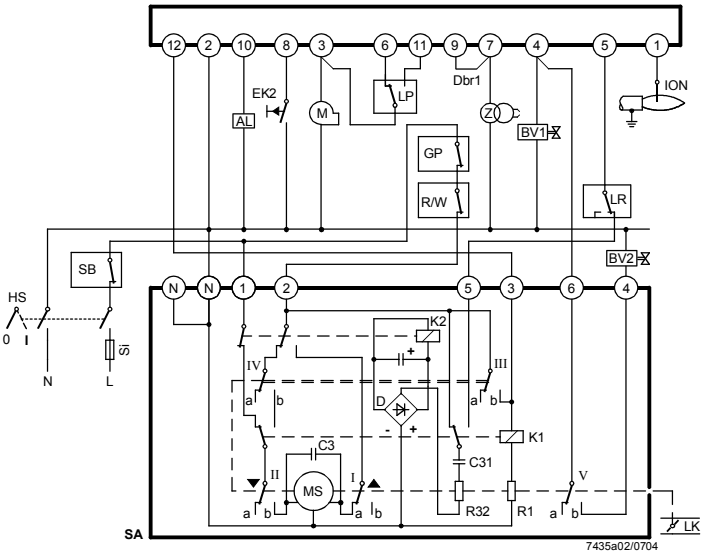

SQN91.140 / 2-stage control

* Note:
With 2-stage modulating burners (with gas control damper (RV)), fuel valve (BV2) and the dotted connection between terminals (*) are not required

LGB21

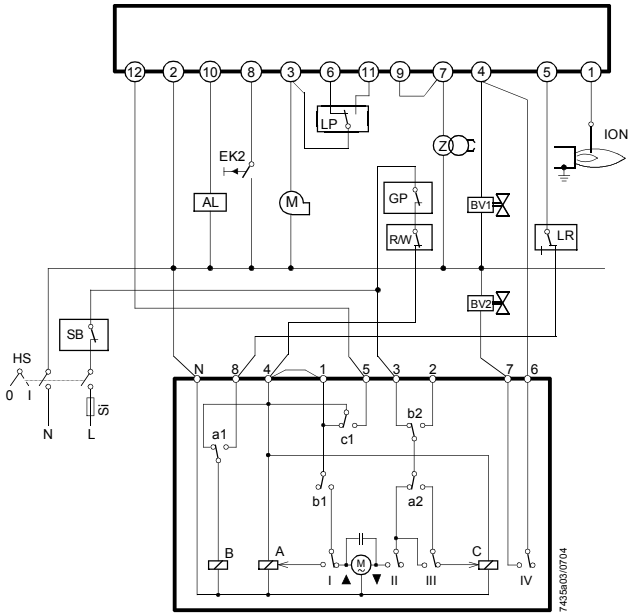

SQN7...244 / 2-stage control

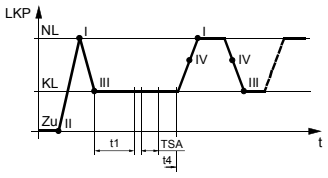

Burner without fan and **without air pressure switch (LP)**

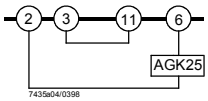

Burner with fan control via auxiliary contactor (HS) **with air pressure switch (LP)**

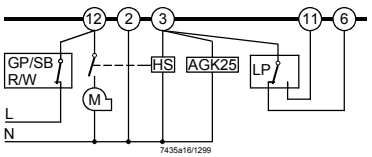

QRA with auxiliary unit AGQ1.xA27 with LGB21 (diagram 7435a06)

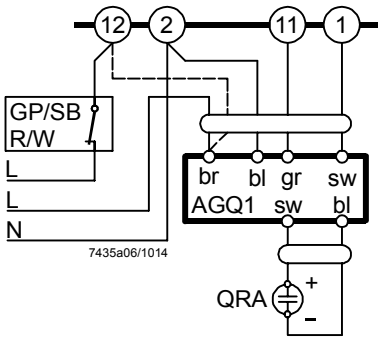

Legend

bl Blue wire
br Brown wire
gr gray (previously: rt = red)
sw Black wire

LGB22 / LGB32

Burner controls for single- or 2-stage forced draft burners.
Air damper control for prepurging with **nominal load air volume**.

Flame supervision

LGB22: With ionization probe or auxiliary unit AGQ1.xA27 for UV detector QRA
LGB32: With blue-flame detector QRC1

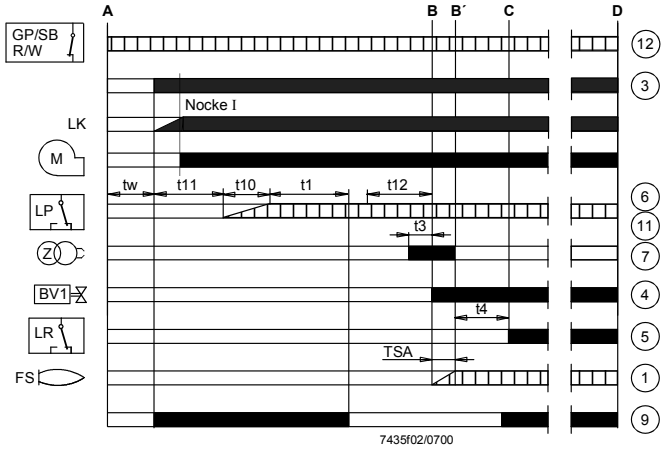

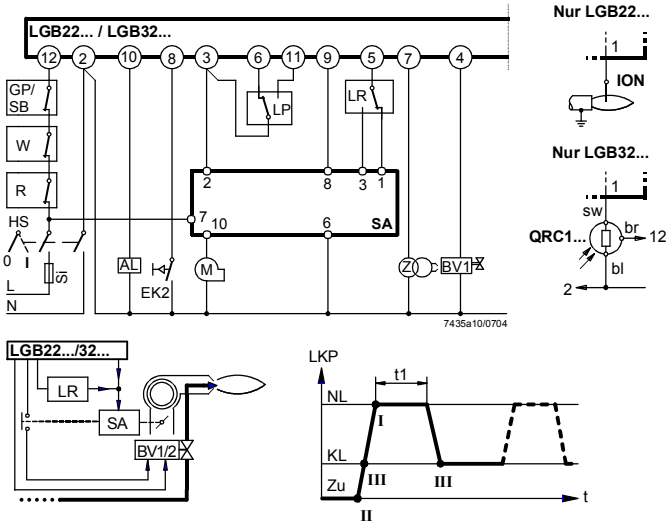

Application examples
Control of actuators of 2-stage or 2-stage modulating burners.
Prepurging (t1) with nominal load air volume.

For information about the actuators:
SQN3: Refer to Data Sheet N7808
SQN7: Refer to Data Sheet N7804
SQN9: Refer to Data Sheet N7806

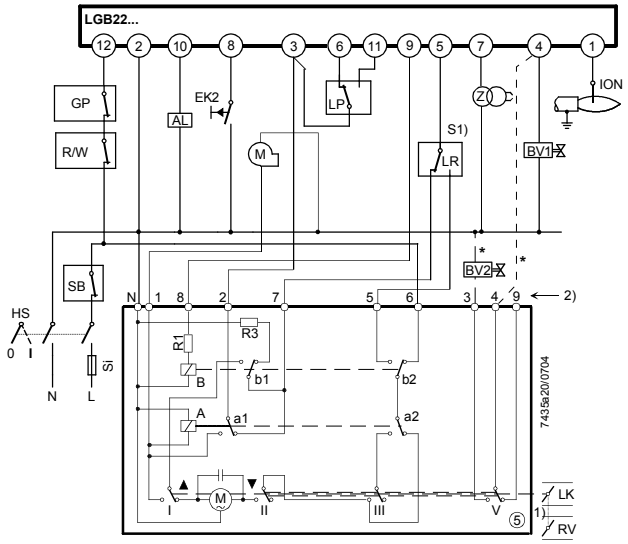

SQN3...151 or SQN3...251

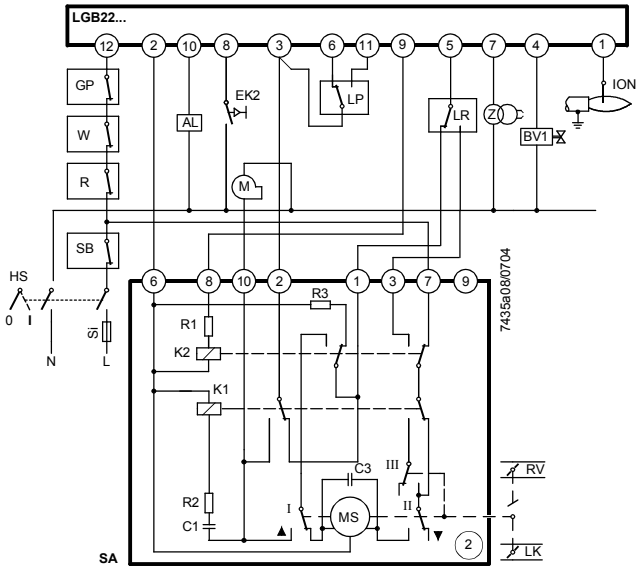

SQN90.220 / 2-stage modulating control

* Note:
With 2-stage modulating burners (with gas control damper (RV)), fuel valve (BV2) and the dotted connection between terminals marked (*) are not required.

LGB22 / LGB32

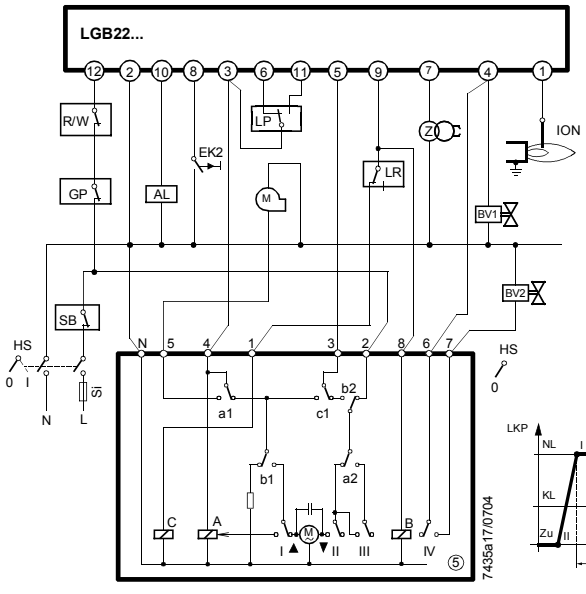

SQN7...454 / 2-stage control
Single-wire control

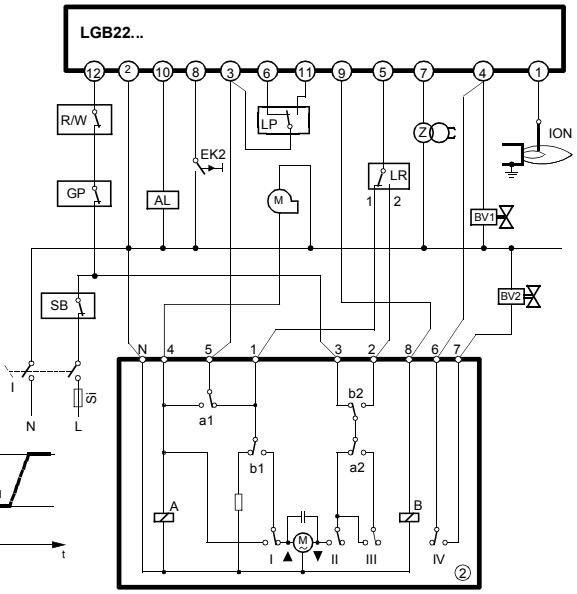

SQN7...424 / 2-stage control
2-wire control

Burner without fan and **without air pressure switch (LP)**

LGB22 / LGB32

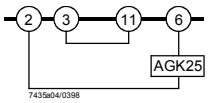

Burner with fan control via auxiliary contactor (HS) **with air pressure switch (LP)**

LGB22 / LGB32

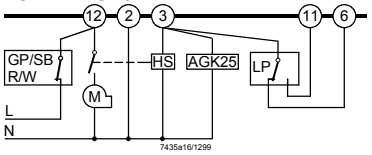

QRA with auxiliary unit AGQ1.xA27 with LGB22
(diagram 7435a06)

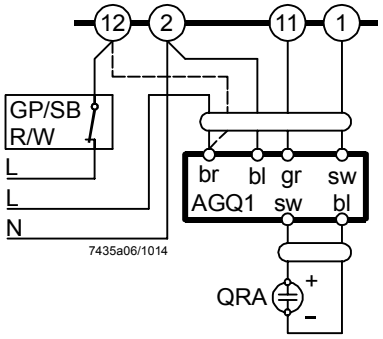

Legend

bl Blue wire
br Brown wire
gr gray (previously: rt = red)
sw Black wire

Legend

TSA	Ignition safety time
t1	Prepurge time
t4	Interval fuel valve (BV1) – fuel valve (BV2) LGB22 / LGB32: interval fuel valve (BV1) – load controller (LR)
AL	Alarm
BV...	Fuel valve
EK2	Remote reset button
ION	Ionization probe
GP	Gas pressure switch
HS	Mains isolator
KL	Low-fire
LKP	Air damper position
LP	Air pressure switch
LR	Load controller
M	Fan motor
NL	Nominal load
R	Control thermostat or pressurestat
SB	Safety limit thermostat
Si	Primary fuse
W	Limit thermostat
Z	Ignition transformer

Connection diagram and control sequence (cont'd)

LGB41

Burner controls for atmospheric gas burners with or without fan. No actuator control. Flame supervision with ionization probe

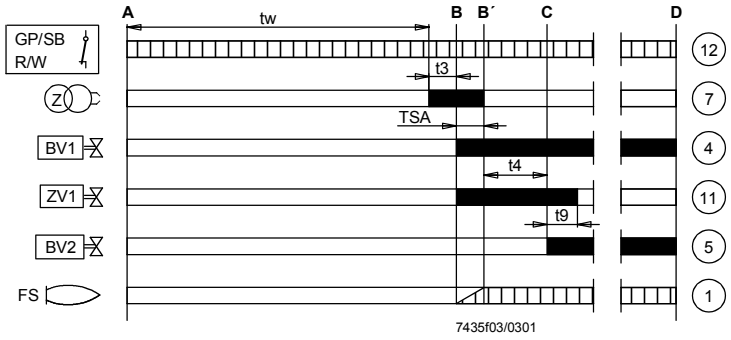

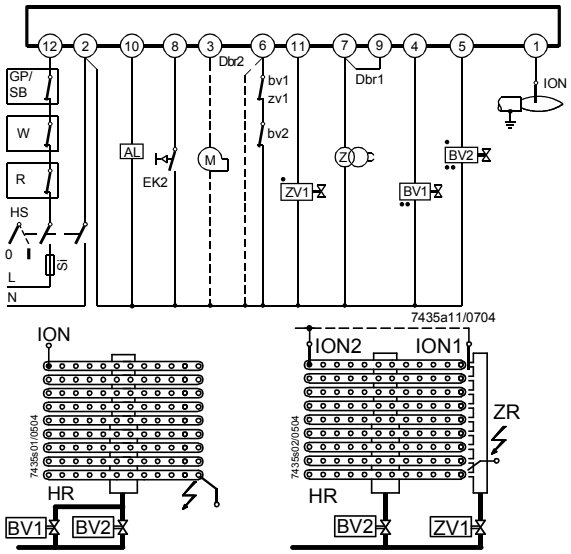

QRA with auxiliary unit AGQ1.xA27 with LGB4 (pictures 7435a21)

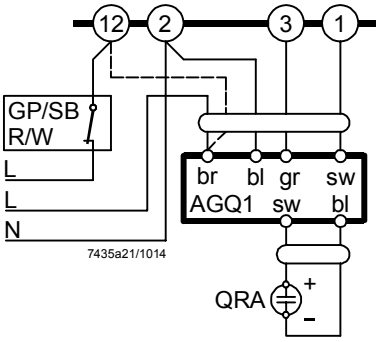

Legend

A	Startup (switching on by control thermostat or pressurestat (R)
B – B´	Interval for establishment of flame
C	Operation position of burner or release of the second stage by load controller (LR)
D	Shutdown by control thermostat or pressurestat (R)
tw	Waiting time
TSA	Ignition safety time
t3	Preignition time
t4	Interval fuel valve (BV1) – fuel valve (BV2)
t9	2nd safety time
▭	Required input signals
■	Burner control's output signals
•	Connection of valves with pilot burners with main flame supervision
••	Connection of valves with 2-stage atmospheric burners with supervision of the first stage (fuel valve (BV1))

AL	Alarm
BV...	Fuel valve
bv...	Auxiliary switch in the fuel valves (for control the closed position)
Dbr1	Wire link
Dbr2	Wire link, required when contacts «bv» or «zv1» is missing
EK2	Remote reset button
ION	Ionization probe
FS	Flame signal
GP	Gas pressure switch
HR	Main ramp
HS	Main switch
M	(Auxiliary) fan motor
QRA	UV flame detector
QRC	Blue flame detector
bl	Blue wire
br	Brown wire
gr	gray (previously: rt = red)
sw	Black wire
R	Control thermostat or pressurestat
SB	Safety limit thermostat
Si	Primary fuse
W	Limit thermostat
Z	Ignition transformer
ZR	Ignition ramp
ZV1	Ignition gas valve
zv1	Auxiliary switch in ignition gas valve

Internal diagram and time diagram of the programming mechanisms

LGB21

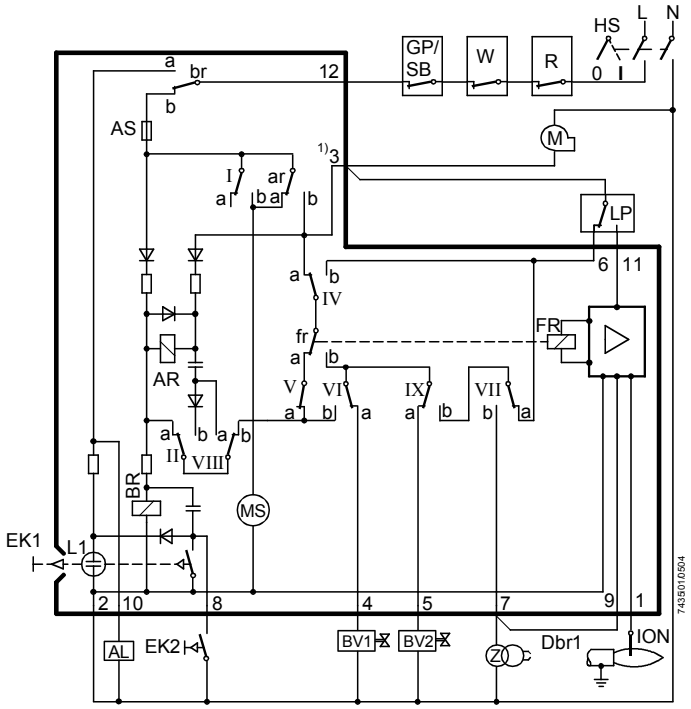

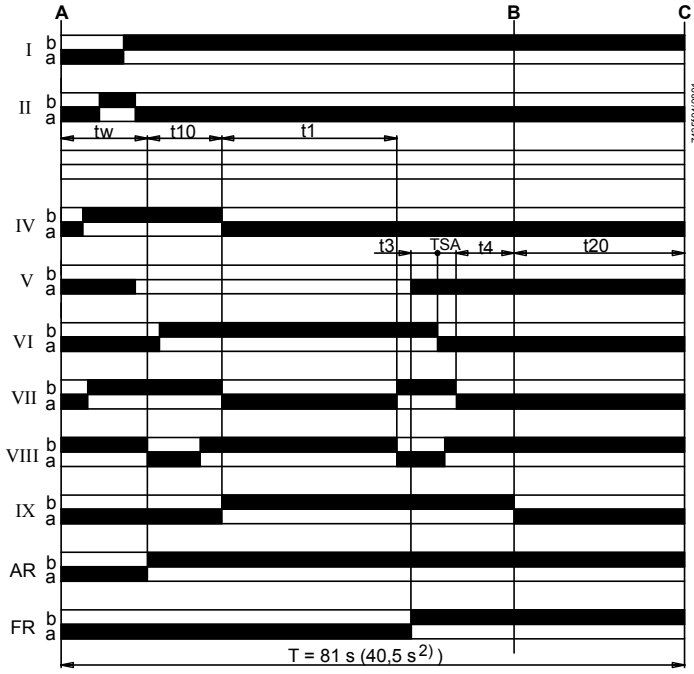

Legend

AL	Alarm
AR	Load relay with contact «ar»
AS	Unit fuse
BR	Locking relay with contact «br»
BV...	Fuel valve
Dbr1	Wire link
EK...	Lockout reset button
FR	Flame relay
GP	Gas pressure switch
HS	Mains isolator
ION	Ionization probe
L1	Lockout warning lamp
LP	Air pressure switch
M	Fan motor
MS	Synchronous motor
R	Control thermostat or pressurestat
SB	Safety limit thermostat
W	Limit thermostat or pressure switch
Z	Ignition transformer

A	Start position (switching on)
B	Operating position of burner
C	Operating position of programming mechanism or start position
I...IX	Cam switches
tw	Waiting time
TSA	Ignition safety time
T	Total running time of programming mechanism
t1	Prepurge time
t3	Preignition time
t4	Interval fuel valve (BV1) – fuel valve (BV2)
t10	Specified time for air pressure signal
t20	Interval up to self-shutdown of programming mechanism
1)	Resistance between terminal 3 and «N» must not exceed 1.6 kΩ
2)	Only with LGB21.130A27

LGB22 / LGB32

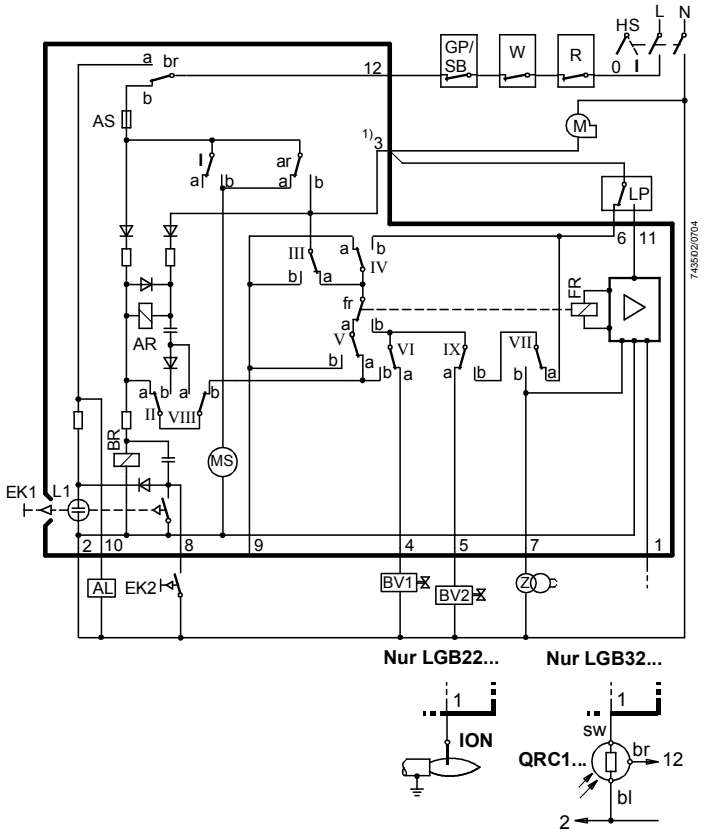

Legend

AL	Alarm
AR	Load relay with contact «ar»
AS	Unit fuse
BR	Locking relay with contact «br»
BV...	Fuel valve
EK...	Lockout reset button
FR	Flame relay
GP	Gas pressure switch
HS	Mains isolator
ION	Ionization probe
L1	Lockout warning lamp
LP	Air pressure switch
M	Fan motor
MS	Synchronous motor
R	Control thermostat or pressurestat
SB	Safety limit thermostat
W	Limit thermostat or pressure switch
Z	Ignition transformer



A	Start position (switching on)
B	Operating position of burner
C	Operating position of programming mechanism or start position
I...IX	Cam switches
tw	Waiting time
TSA	Ignition safety time
T	Total running time of programming mechanism
t1	Prepurge time
t3	Preignition time
t4	Interval fuel valve (BV1) – fuel valve (BV2) or fuel valve (BV1) – load controller (LR)
t10	Specified time for air pressure signal
t11	Programmed opening time for actuator (SA)
t12	Programmed closing time for actuator (SA)
t20	Interval up to self-shutdown of programming mechanism
1)	Resistance between terminal 3 and «N» must not exceed 1.6 kΩ

LGB41

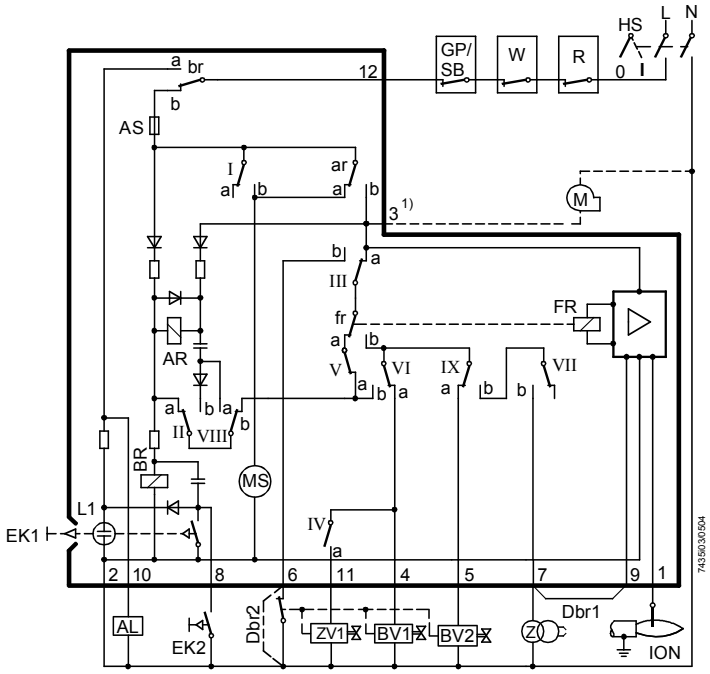

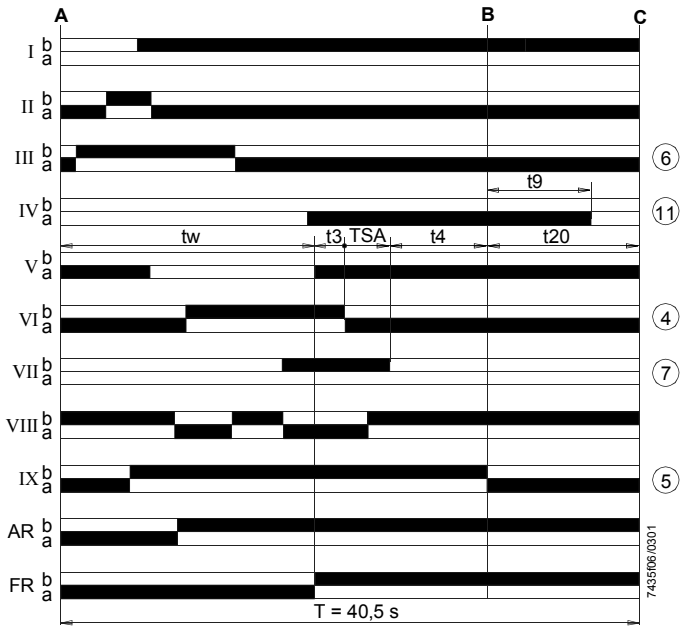

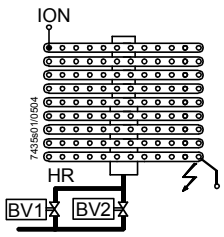

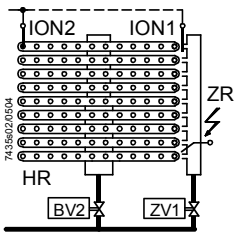

Legend

AL	Alarm
AR	Load relay with contact «ar»
AS	Unit fuse
BR	Locking relay with contact «br»
BV...	Fuel valve
Dbr1	Wire link
Dbr2	Wire link terminal 6-2 required when contact «bv» or «zv1» is missing
EK...	Lockout reset button
FR	Flame relay
GP	Gas pressure switch
HR	Main burner
HS	Mains isolator
ION	Ionization probe
L1	Lockout warning lamp
M	Fan motor
MS	Synchronous motor
R	Control thermostat or pressurestat
SB	Safety limit thermostat
W	Limit thermostat or pressure switch
Z	Ignition transformer
ZR	Pilot burner
ZV1	Pilot gas valve in place of fuel valve (BV1) in the case of pilot burners with main flame supervision
tw	Waiting time
TSA	Ignition safety time
T	Total running time of programming mechanism
t3	Preignition time
t4	Interval fuel valve (BV1) – fuel valve (BV2)
t9	Second safety time
t20	Interval up to self-shutdown of the programming mechanism

A	Start position (switching on)
B	Operating position of burner
C	Operating position of programming mechanism or start position

I...IX	Cam switches

1)	Resistance between terminal 3 and «N» must not exceed 1.6 kΩ

Dimensions

Dimensions in mm

LGB



Plug-in base AGK11

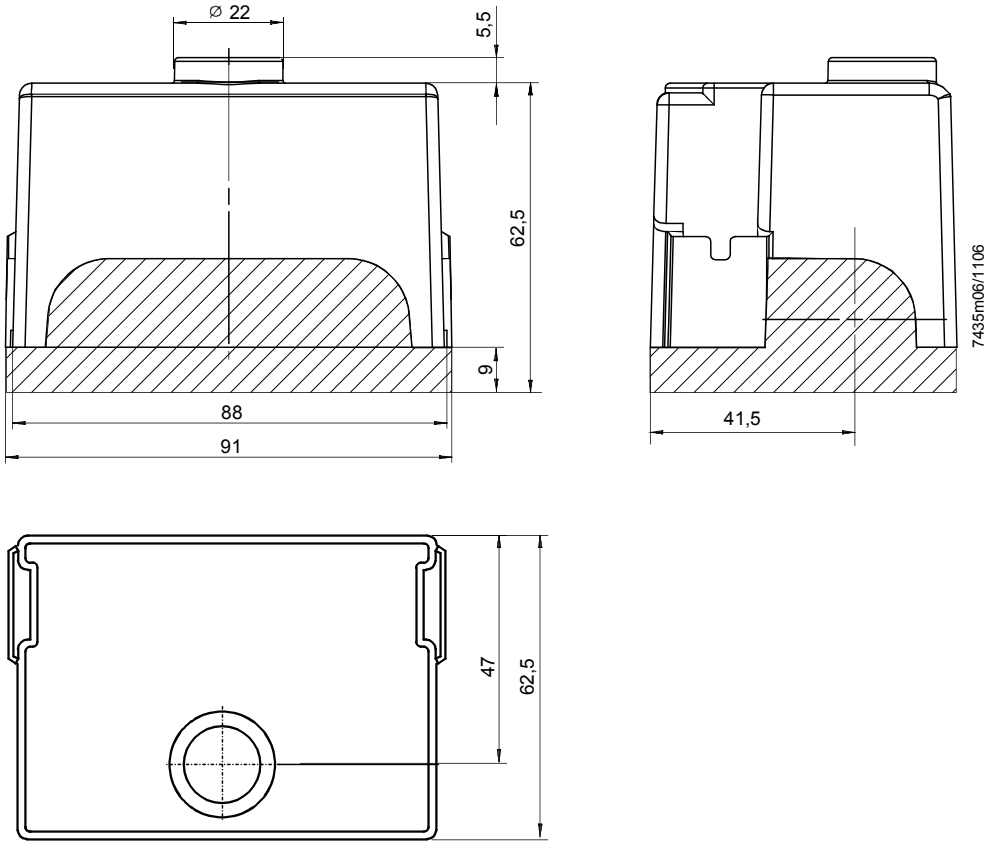

Auxiliary unit
AGQ1.xA27

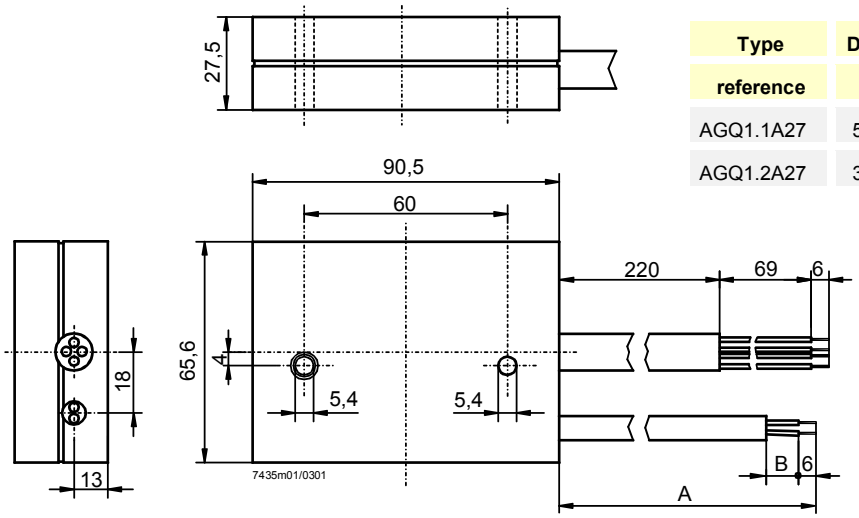

Type reference	Dimension A	B
AGQ1.1A27	500	19
AGQ1.2A27	300	34

©2018 Siemens AG Building Technologies, Berliner Ring 23, D-76437 Rastatt
Subject to change!