Honeywell

7800 SERIES Relay Modules EC7823A, RM7823A

OPERATING INSTRUCTIONS

· Edition 06.22 · 32-00230-03 · EN



CONTENTS

1 Application 1
2 Specifications 2
3 Installation 2
4 Operation 10
5 Safety and Security 11
6 Disposal 11

1 APPLICATION

The Honeywell EC/RM7823A Relay Module is a microprocessor based flame detector relay that can be fitted with any 7800 SERIES Flame Amplifier to provide relay action from one dpdt relay when flame is or is not present. The EC/RM7823A system consists of a relay module, wiring sub-base and flame amplifier. Options include keyboard display module (KDM), personal computer interface, Data ControlBus Module™, remote display mounting and Combustion System Manager™ Software.

Functions provided by the EC/RM7823A include flame monitoring, self-diagnostics and troubleshooting.The EC/RM7823A is a solid state replacement for the R7023B,C Flame Detector Relays.

The EC7823/RM7823 is a flame detector relay only. A switchable primary control must be used to provide safe-start check, safety lockout, load switching and other functions required in Flame Safeguard systems.

This document covers the following 7800 Series Relay Modules:
EC7823A1004
RM7823A1016
EC7823A2004
RM7823A2016

This document provides installation and static checkout instructions.

Other applicable publications are:

Form Number	Description
32-00110	S7800A2142 4-line LCD Keyboard Display Module Product Data
32-00166	204729A/C KDM NEMA4 Covers for 4-line LCD KDM
32-00235	R7824, R7847, R7848, R7849, R7861, R7886 Flame Amplifiers for the 7800 SERIES Product Data
65-0084	Q7800A,B 22-Terminal Wiring Sub-base Product Data
65-0090	S7800A Keyboard Display Module Product Data
65-0091	S7810A Data ControlBus™ Module Product Data
65-0095	S7820 Remote Reset Module Product Data
65-0097	221729C Dust Cover Packing Instructions
65-0131	221818A Extension Cable Assembly Product Data

EN – www.docuthek.com

32-00230-03

ПРОМЭЛЕКТРОНИКА / sales@prom-elec.com

Form Number	Description
65-0229	7800 SERIES Relay Modules Checkout and Troubleshooting Product Data
65-0249	S7810M ModBus Module (For CE , Modbus module S7810M1029 only).
65-0295	50023821-001/2 KDM NEMA4 Covers for classic 2-line VFD KDM

2 SPECIFICATIONS

Electrical Ratings, see page 7 (3.6.1 Table 3. Terminal Ratings for RM7823A):
Voltage and Frequency:
EC7823A: 220-240 Vac +10%/-15%, 50/60 Hz ±10%.
RM7823A: 120 Vac, +10%/-15%, 50/60 Hz, ± 10%.
Power Dissipation:
10W maximum.
Maximum Total Connected Load: 2000 VA.
Fusing: Total Connected Load: 15A, type SC, Fast Blow, or equivalent.

Environmental Ratings:
Ambient Temperature:
Operating: -40°F to 140°F (-40°C to +60°C).
Storage: -40°F to 150°F (-40°C to +66°C).
Humidity: 85% relative humidity continuous, noncondensing.
Vibration: 0.5G environment.

Approvals:

RM7823A:
Underwriters Laboratories Inc. Listed: File No. MP268. ANSI/UL 60730-2-5 / CSA C22.2 No. 60730-2-5 -Automatic Electrical Controls for Household and Similar Use, Part 2-5: Particular Requirements for Automatic Electrical Burner Control Systems
IAPMO R&T OCEANA Gasmark Certificate GMK10801
Swiss Re (formerly Industrial Risk Insurers): Acceptable.

EC7823A and RM7823A:
Factory Mutual Approved: Report No. J.I.1V9A0.AF.
Federal Communications Commission:

Part 15, Class B, Emissions.
CE and UKCA: European Directives (see here under)
KIWA CE certificate 19GR0589/01, PIN 0063CU1745
KIWA UKCA certificate UKCA/0558/22/039, PIN 0063CU1745
EAC: TC N RU д-US.Аи3О.В.04013

SIL3 Capable:
SIL3 Capable in a properly designed Safety Instrumented System. Refer to www.exida.com for the Certificate Agreement and Assessment Report.

European Directives
Gas Appliances Regulation: 2016/426/EU GAR
Low Voltage Directive: 2014/35/EU LVD.
EMC Directive: 2014/30/EU EMC (Immunity Emission conformity can only be verified in combination with the appliance).

Applicable European Standards:
(BS) EN 298:2012 Automatic burner controls
(BS) EN 60335-2-102 Household and similar electrical appliances
(BS) EN 746-2:2010 Industrial thermo-processing - fuel handling systems
Please note the following to comply with (BS) EN 60730 for remote mounting of the KDM and/or remote reset module. It is necessary to provide electrical separation using insulation at least equivalent to double or reinforced insulation. This can be accomplished by either:

1 Optically isolating the communication and/or remote reset lines from the control cabinet or
2 Providing physical separation from the communication and/or remote reset lines using electrical conduit and a 50023821-001/002 (for S7800A 2-line VFD) or 204729A/C (for S7800A 4-line LDC) Remote Display Cover Assembly or other suitable enclosure that meets NEMA4 or IP54 class of protection.

3 INSTALLATION

IMPORTANT
Installer must be a trained, experienced, flame safeguard service technician.

3.1 When Installing this Product ...

1 Read these instructions carefully. Failure to follow them could damage the product or cause a hazardous condition.
2 Check the ratings given in the instructions and marked on the product to make sure the product is suitable for the application.
➔ Installer must be a trained, experienced, flame safeguard service technician.
3 After installation is complete, check out the product operation as provided in these instructions.

⚠ WARNING
Fire or Explosion Hazard.
Can cause property damage, severe injury or death.
– To prevent possible hazardous burner operation, verify safety requirements each time a control is installed on a burner.

⚠ WARNING
Electrical Shock Hazard/Equipment Damage Hazard.
Can cause severe injury, death or property damage.
– Disconnect the power supply before beginning installation. More than one power supply disconnect may be required.

3.1.1 Permanent Operation Note

Non-check amplifiers cannot be used in permanent operation (per EN298). For permanent operation only ampli-check (rectification or IR) or shutter/self-check (UV) flame amplifiers are used.

IMPORTANT

1 Wiring connections for the relay modules are unique; refer to page 6 (3.5.5 Fig. 4. Wiring sub-base for EC/RM7823A in SIL-3 applications) or the correct Specifications for proper sub-base wiring.
2 Wiring must comply with all applicable codes, ordinances and regulations.
3 Wiring must comply with NEC Class 1 (Line Voltage) wiring.
4 Loads connected to the EC/RM7823A must not exceed those listed on the EC/RM7823A label or the Specifications; see Table page 7 (3.6.1 Table 3. Terminal Ratings for RM7823A) or page 8 (3.6.2 Table 4. Terminal Ratings for EC7823A).
5 All external timers must be listed or component-recognized by authorities who have proper jurisdiction.
6 For on-off gas-fired systems, some authorities who have jurisdiction prohibit the wiring of any limit or operating contacts in series between the flame safeguard control and the main fuel valve(s).
7 Two Flame Detectors can be connected in parallel with the exception of Infrared (C7915) or Solid State Ultraviolet (C7961) Flame Detectors.
8 This equipment generates, uses and can radiate radio frequency energy and, if not installed and used in accordance with the instructions, can cause interference with radio communications. It has been tested and found to comply with the limits for a Class B computing device of Part 15 of FCC rules which are designed to provide reasonable protection against such interference when operated in a commercial environment. Operation of this equipment in a residential area

may cause interference; in which case, the users at their own expense may be required to take whatever measures are required to correct this interference.

9 This digital apparatus does not exceed the Class B limits for radio noise for digital apparatus set out in the Radio Interference Regulations of the Canadian Department of Communications.

10 Insulation / installation considerations: This apparatus provides two sets of dry-contact relay outputs (terminals 8-10, terminals 13-15). Each set of dry contacts guarantees reinforced insulation (RM7823: up to 120Vac, EC7823: up to 240Vac) relative to all other terminals (including the other set of dry contact output terminals).

11 IEC61508 SIL-3 applications: Both sets of COM-N.O. outputs (terminals 8,9 and 13, 15) must be wired in series (terminal 9 must be tied to terminal 13). N.C. outputs (terminals 10, 14) can't be used in these applications. See page 6 (3.5.5 Fig. 4. Wiring sub-base for EC/RM7823A in SIL-3 applications) for further details.

3.2 Location

3.2.1 Humidity

Install the relay module where the relative humidity never reaches the saturation point. The relay module is designed to operate in a maximum 85% relative humidity continuous, noncondensing, moisture environment. Condensing moisture can cause a safety shutdown.

3.2.2 Vibration

Do not install the relay module where it could be subjected to vibration in excess of 0.5G continuous maximum vibration.

3.2.3 Weather

The relay module is not designed to be weather tight. When installed outdoors, the relay module must be protected by an approved weather-tight enclosure.

3.2.4 Mounting of Remote Keyboard or Reset Module

To comply with CE EN60730 for remote mounting of the KDM and/or Remote Reset Module it is necessary to provide electrical separation using insulation at least equivalent to double or reinforced insulation. This can be accomplished by either:

1 Optically isolating the communication and/or remote reset lines from the control cabinet.

2 Providing physical separation from the communication and/or remote reset lines using electrical conduit and a 50023821-001/002 (for S7800A 2-line VFD) or 204729A/C (for S7800A 4-line LDC) Remote Display Cover Assembly or other suitable enclosure that meets NEMA 4 class of protection.

3.3 Mounting Wiring Sub-base

1 Mount the Sub-base in any position except horizontally with the bifurcated contacts pointing down. The standard vertical position or with the bifurcated contacts point up is recommended. Any other position decreases the maximum ambient temperature rating.

2 Select a location on a wall, burner or electrical panel. The wiring sub-base can be mounted directly in the control cabinet. Be sure to allow adequate clearance for servicing, installation, access or removal of the EC/RM7823A, dust cover, flame amplifier, flame amplifier voltage probes, electrical signal voltage probes and electrical field connections.

3 For surface mounting, use the back of the sub-base as a template to mark the four screw locations. Drill the pilot holes.

4 Securely mount the sub-base using four no. 6 screws (not provided).

➔ NOTE: You might receive error code 101 (via KDM) if one of the following conditions exist:

a The screws securing the Relay Module to the sub-base are not tight enough, re-tighten to insure there is no gap between the Relay Module and the sub-base.

b If you attempt to place a 2000 series Relay Module on a non-compatible 1000 series sub-base, this indicates that you must either:

– Change out the sub-base to a Q7800A2005 or Q7800B2003, or
– Choose a compatible 1000 series Relay Module

3.4 Relay Module and Subbase Compatiblity

➔ NOTE: There are several different sub-base models that can be purchased. It is important to note which sub-base is compatible with the Relay Module when purchasing new, repair or replacement parts.

3.4.1 Series 1000 Relay Modules

All Relay Module product codes that start with a 1 (example: RM7840G1014) can be used with existing sub-base Q7800A1005 and Q7800B1003.

3.4.2 Series 2000 Relay Modules

All Relay Module product codes that start with a 2 (example: RM7840G2014) must be used with sub-base Q7800A2005 and Q7800B2003.

3.4.3 Sub-base Compatibility

Any Relay Module in the 1000 Series with a Software Revision level number starting with a "5" or greater will be compatible with all sub-base models both installed and newly purchased. This includes (Q7800A1005, Q7800B1003), and the 2000 Series sub-bases (Q7800A2005, Q7800B2003).

See Fig. 1 for Software Revision Level number location on the label (located on the rear of the Relay Module).

Any Relay Module in the 2000 series will only be able to be installed on sub-base Q7800A2005, Q7800B2003 and will not be backward compatible with any Q7800A1005 or Q7800B1003 sub-bases already installed in the field.

Fig. 1. Software revision location



IMPORTANT

Make sure to check the O.S. number and the software revision level of the Relay Module.

➔ If you attempt to place a 2000 series Relay Module on a non-compatible 1000 series sub-base, you will receive error code 101. This indicates that you must either:

a) change out the sub-base to a Q7800A2005 or Q7800B2003, or

b) choose a compatible 1000 series Relay Module.

3.5 Wiring Subbase

⚠ WARNING

Electrical Shock Hazard.

Can cause serious injury, death or equipment/control damage.

– Disconnect the power supply before beginning installation. More than one power supply disconnect may be required.

3.5.1 Fig. 2. Internal block diagram of the EC/RM7823A

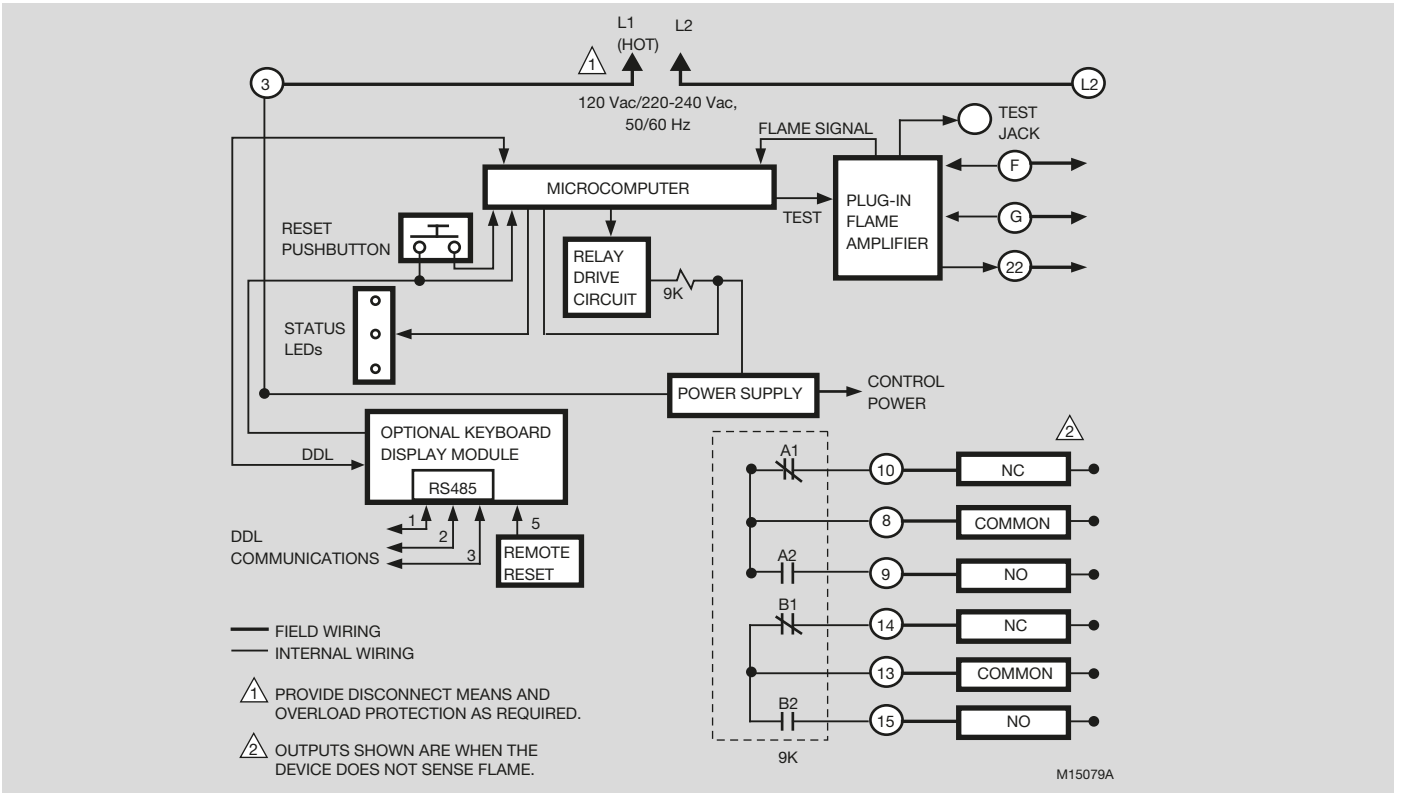

➔ See page 5 (3.5.4 Fig. 3. Wiring sub-base for EC/RM7823A) for detailed wiring instructions

3.5.2 Table 1. Recommended wire sizes and part numbers

Application	Recommended Wire Size	Recommended Part Numbers
Line voltage terminals	14, 16 or 18 AWG (0.75, 1.5 or 2.5 mm2) copper conductor, 600 volt insulation, moisture-resistant wire.	
Keyboard Display Module	22 AWG (0.34 mm2) two-wire twisted pair with ground, or five wire.	Belden® 8723 shielded cable or equivalent.
Data ControlBus Module™	22 AWG (0.34 mm2) two-wire twisted pair with ground, or five wire.	Belden® 8723 shielded cable or equivalent.
Remote Reset Module	22 AWG (0.34 mm2) two-wire twisted pair, insulated for low voltage.	—
Communications Interface ControlBus Module	22 AWG (0.34 mm2) two-wire twisted pair with ground.	Belden® 8723 shielded cable or equivalent.
13 Vdc full-wave rectified transformer power input.	18 AWG (0.75 mm2) wire insulated for voltages and temperatures for given application.	

3.5.3 Table 2. Recommended Grounding Practices

Ground Type	Recommended Practice
Earth ground (sub-base and Relay Module)	**1.** Use to provide a connection between the sub-base and the control panel of the equipment. Earth ground must be capable of conducting enough current to blow the 15A fuse (or breaker) in the event of an internal short circuit. **2.** Use wide straps or brackets to provide minimum-length, maximum-surface area ground conductors. If a leadwire must be used, use 14 AWG (2.5 mm^2) copper wire. **3.** Make sure that mechanically tightened joints along the ground path are free of nonconductive coatings and protected against corrosion on mating surfaces.
Signal Ground (S7800, S7810 and S7820-series interface modules)	Use the shield of the signal wire to ground the device to the signal ground terminal 3(c) on the top connector of each device. Connect the shield at both ends of the daisy chain to earth ground.

3.5.4 Fig. 3. Wiring sub-base for EC/RM7823A

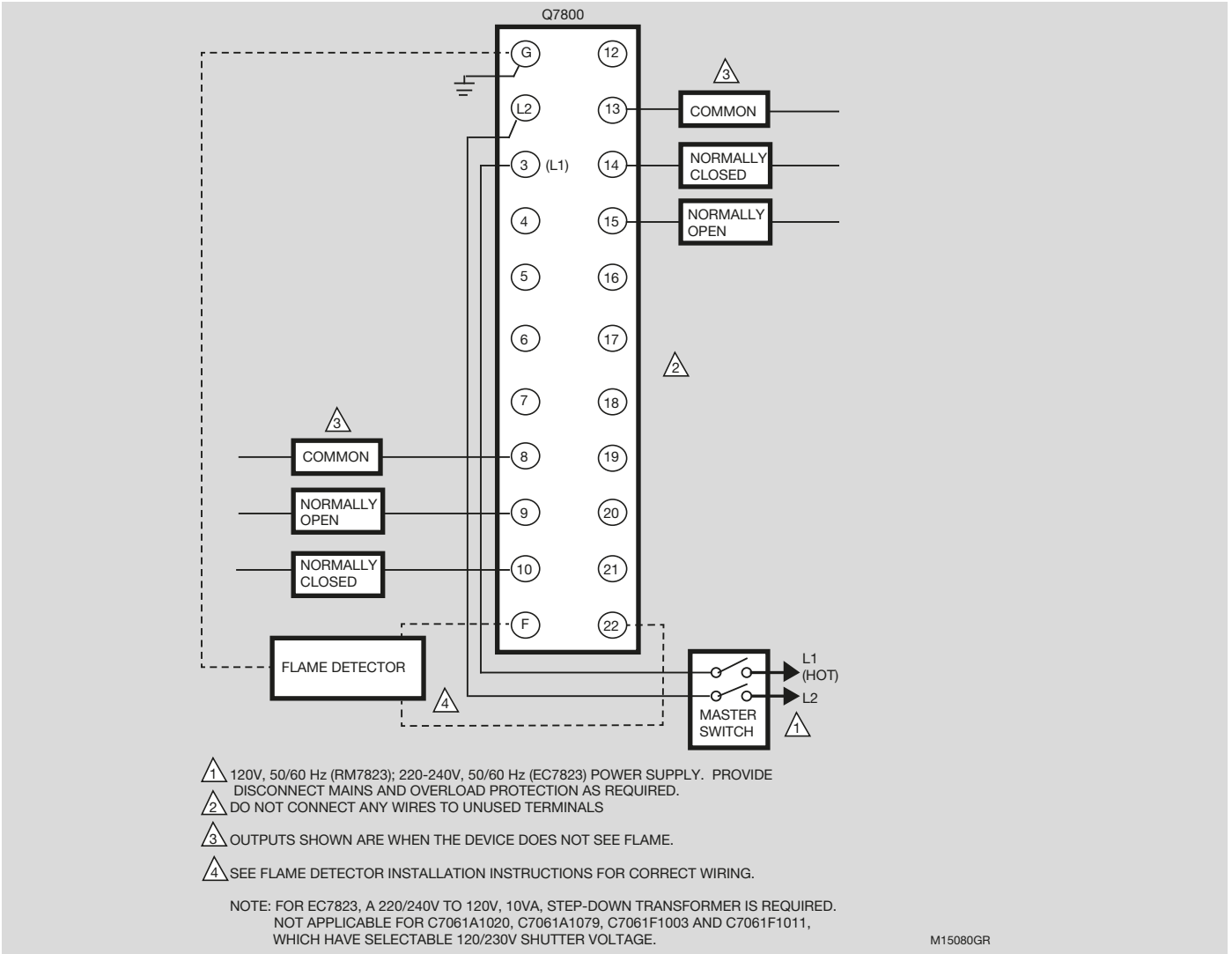

3.5.5 Fig. 4. Wiring sub-base for EC/RM7823A in SIL-3 applications

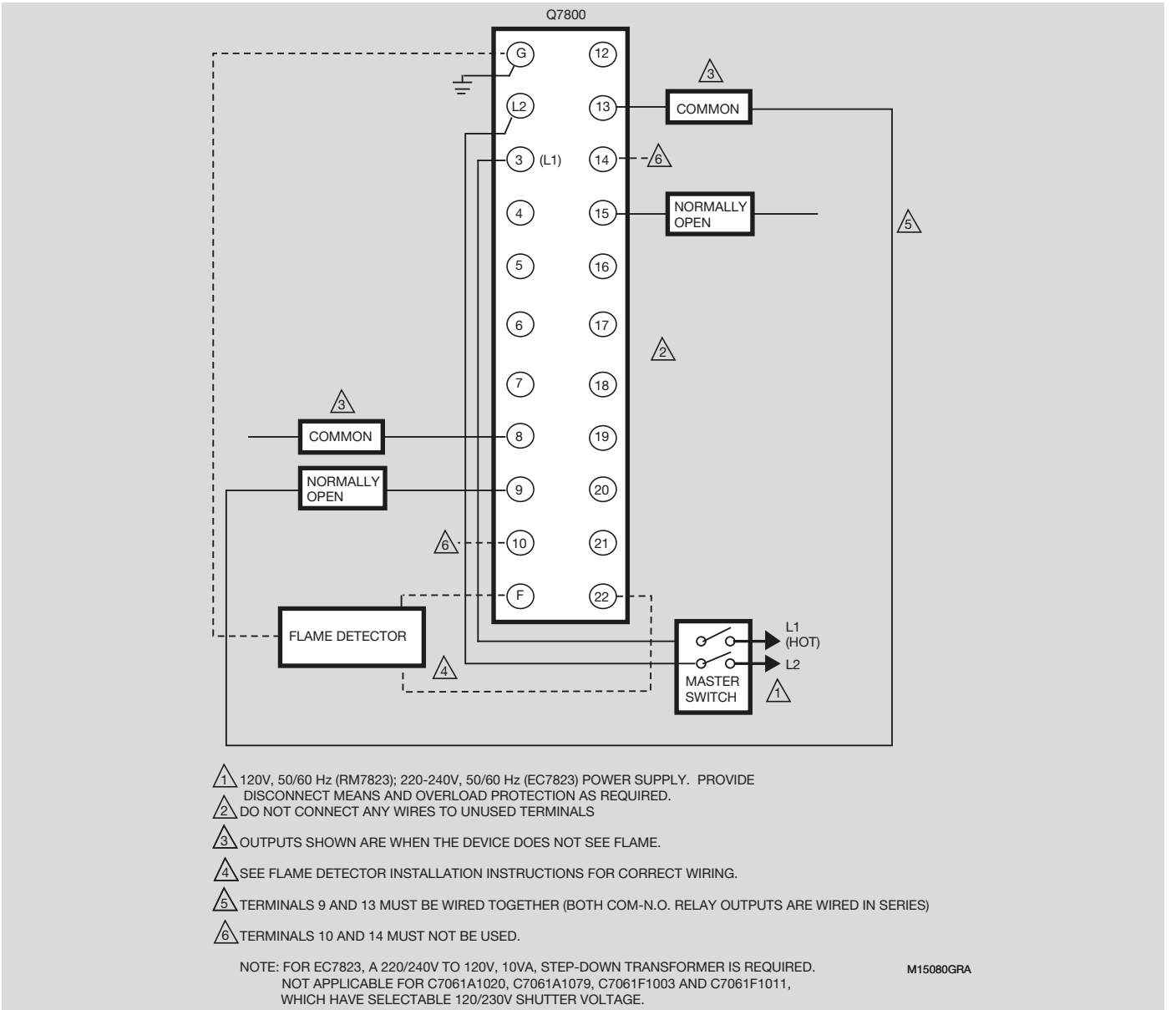

1 For proper sub-base wiring, refer to page 4 (3.5.1 Fig. 2. Internal block diagram of the EC/RM7823A), page 5 (3.5.4 Fig. 3. Wiring sub-base for EC/RM7823A), page 6 (3.5.5 Fig. 4. Wiring sub-base for EC/RM7823A in SIL-3 applications), page 9 (3.8.1 Fig. 5. EC/RM7823A Relay Module, exploded view) or page 10 (4.1.1 Fig. 6. Sequence status LEDs).

2 For proper remote wiring of the Keyboard Display Module, refer to the Specifications for the Keyboard Display Module 2-line VFD KDM (65-0090), the 4-line LCD KDM (32-00110), Network Interface Unit (63-2278), Data ControlBus Module™ (65-0091) or Extension Cable Assembly (65-0131).

3 Disconnect the power supply from the main disconnect before beginning installation to prevent electrical shock and equipment damage. More than one disconnect may be required.

4 All wiring must comply with all applicable electrical codes, ordinances and regulations. Wiring must comply with NEC, Class 1 (Line Voltage) wiring.

➔ For recommended wire size and type, see page 4 (3.5.2 Table 1. Recommended wire sizes and part numbers).

➔ For recommended grounding practices, see page 5 (3.5.3 Table 2. Recommended Grounding Practices).

5 Recommended wire routing of leadwires:

a Do not run high voltage ignition transformer wires in the same conduit with the flame detector.

b Do not route flame detector leadwires in conduit with line voltage circuits.

c Enclose flame detector leadwires without armor cable in metal cable or conduit.

d Follow directions in flame detector instructions.

➔ Maximum wire lengths:

a. EC/RM7823A leadwires: The maximum leadwire length is 300 feet (about 90 meter) to terminal inputs.

b. Flame Detector leadwires: The maximum flame sensor leadwire length is limited by the flame signal strength.

6 Make sure loads do not exceed the terminal ratings. Refer to the label on the EC/RM7823A or to the ratings in Tables 3 (page 7 (3.6.1 Table 3. Terminal Ratings for RM7823A)) and 4 (page 8 (3.6.2 Table 4. Terminal Ratings for EC7823A)).

3.6 Final Wiring Check

1. Check the power supply circuit. The voltage and frequency tolerance must match those of the EC/RM7823A. A separate power supply circuit may be required for the EC/RM7823A. Add the required disconnect means and overload protection.
2. Check all wiring circuits and complete the Static Checkout in Table 5 page 10 (4.1.2 Table 5. LED sequence status display information) before installing the EC/RM7823A on the sub-base.
3. Install all electrical connectors.
4. Restore panel power.

3.6.1 Table 3. Terminal Ratings for RM7823A

Terminal Number	Description	Ratings		
		UL60730-2-5[b]	EN298[c]	IEC61508 SIL-3
G	Flame Sensor Ground[a]	—		
Earth G	Earth Ground[a]	—		
L2(N)	Line Voltage Common	—		
3	Line Voltage Supply (L1)	120 Vac (+10%/-15%), 50/60 Hz (±10%).		
4-7	Unused	—		
8	9KA Common	—		
9	9KA1 N.O.	6 FLA, 18 LRA at 120Vac, or 1A Pilot Duty at 120Vac,or 1A resistive at 30Vdc	4A / PF0.5 at 120Vac (non-permanent operation) or 2A / PF0.5 at 120Vac (permanent operation)	Connect to terminal 13
10	9KA2 N.C.	1A Pilot Duty at 120Vac, or 1A resistive at 30Vdc	2A / PF0.5 at 120Vac (permanent operation)	Not used[d]
F(11)	Flame Sensor	60 to 220 Vac, current limited.		
12	Unused.	—		
13	9KB Common	—	—	Connect to terminal 9
14	9KB1 N.C.	1A Pilot Duty at 120Vac, or 1A resistive at 30Vdc	4A / PF0.5 at 120Vac (non-permanent operation) or 2A / PF0.5 at 120Vac (permanent operation)	Not used[d]
15	9KB2 N.O.	6 FLA, 18 LRA at 120Vac, or 1A Pilot Duty at 120Vac, or 1A resistive at 30Vdc	2A / PF0.5 at 120Vac (permanent operation)	0.7A / PF0.5 at 120Vac
16-21	Unused	—		
22	Shutter	120 Vac, 0.5A.		

[a] *The relay module must have an earth ground providing a connection between the sub-base and the control panel or the equipment. See page 5 (3.5.3 Table 2. Recommended Grounding Practices) for further details.*

[b] *100K operation cycles.*

[c] *250K operation cycles.*

[d] *N.C. outputs cannot be used in SIL-3 applications.*

3.6.2 Table 4. Terminal Ratings for EC7823A

Terminal Number	Description	Ratings[a]	
		EN298[c]	IEC61508 SIL-3
G	Flame Sensor Ground[a]	—	
Earth G	Earth Ground[a]	—	
L2(N)	Line Voltage Common	—	
3	Line Voltage Supply	220-240 Vac (+10%/-15%), 50/60 Hz (±10%).	
4-7	Unused	—	
8	9KA Common	—	
9	9KA1 N.O.	4A / PF0.5 at 240Vac (non-permanent operation) or 2A / PF0.5 at 240Vac (permanent operation)	Connect to terminal 13
10	9KA2 N.C.	2A / PF0.5 at 240Vac (permanent operation)	Not used[d]
F(11)	Flame Sensor	16 to 220 Vac, current limited.	
12	Unused	—	
13	9KB Common	—	Connect to terminal 9
14	9KB1 N.C.	4A / PF0.5 at 240Vac (non-permanent operation) or 2A / PF0.5 at 240Vac (permanent operation)	Not used[d]
15	9KB2 N.O.	2A / PF0.5 at 240Vac (permanent operation)	0.7A / PF0.5 at 240Vac
16-21	Unused	—	
22	Shutter	220-240 Vac, 0.25A[e]	

[a] *The relay module must have an earth ground providing a connection between the sub-base and the control panel or the equipment. See page 5 (3.5.3 Table 2. Recommended Grounding Practices) for further details.*

[b] *100K operation cycles.*

[c] *250K operation cycles.*

[d] *N.C. outputs cannot be used in SIL-3 applications.*

[e] *A 220-240 Vac to 120 Vac, 10 VA minimum stepdown transformer (not provided) must be used to drive the shutter. Not applicable for C7061A1020, C7061A1079, C7061F1003 and C7061F1011, which have selectable 120/230V shutter voltage.*

3.7 Mounting EC/RM7823A Relay Module

1 Mount the EC/RM7823A on the Q7800 Sub-base vertically, or mount horizontally with the knife blade terminals pointing down. (For mounting on the Q7800A, mount the RM7823A/EC7823A in an electrical enclosure; for EN298 compliance (CE) the RM7823A/EC7823A must always mount inside a grounded cabinet, even when using the Q7800B wall mount sub-base.

2 When mounting in an electrical enclosure, provide adequate clearance for servicing, installation and removal of the EC/RM7823A, keyboard display module, flame amplifier, flame amplifier signal voltage probes, electrical signal voltage probes, and electrical connections.

a Allow an additional two inches below the EC/RM7823A for the flame amplifier mounting.

b Allow an optional three inches minimum to both sides of the EC/RM7823A for electrical signal voltage probes.

3 Make sure no sub-base wiring is projecting beyond the terminal blocks. Tuck in wiring against the back of the sub-base so it does not interfere with the knife blade terminals or bifurcated contacts.

IMPORTANT

The EC/RM7823A must be installed with a plug-in motion rather than a hinge action.

4 Mount the EC/RM7823A by aligning the four L shaped corner guides and knife blade terminals with the bifurcated contacts on the wiring sub-base and securely tightening the two screws without deforming the plastic.

3.8 Mounting Other System Components

Some other system components are shown in Fig. 4, see page 5 (3.5.4 Fig. 3. Wiring sub-base for EC/RM7823A). Mount other required and optional system components by referring to the instructions provided with each component.

3.8.1 Fig. 5. EC/RM7823A Relay Module, exploded view

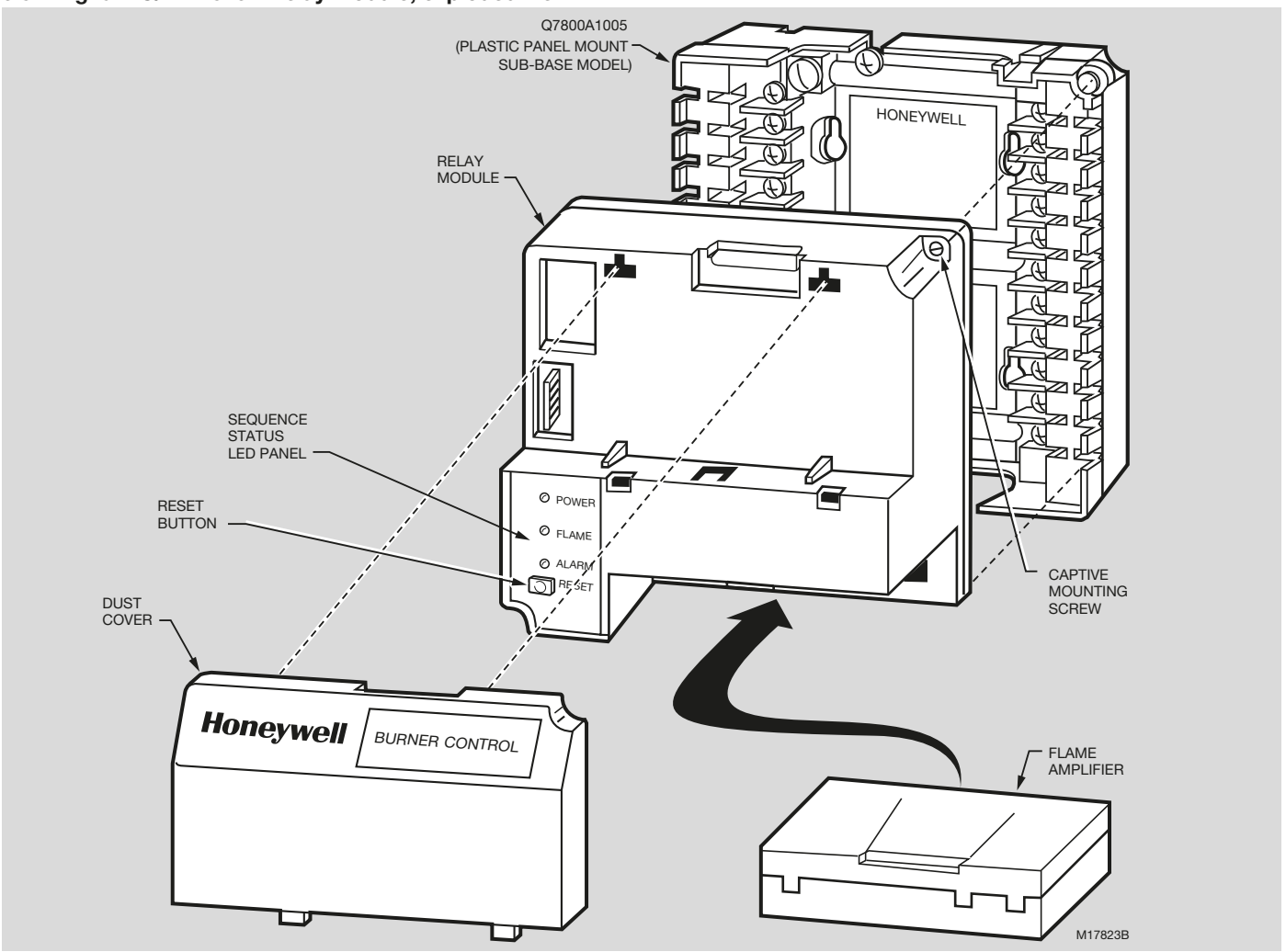

4 OPERATION

4.1 Sequence of Operation

The EC/RM7823A has the following operating sequences, see page 9 (3.8.1 Fig. 5. EC/RM7823A Relay Module, exploded view) and page 10 (4.1.2 Table 5. LED sequence status display information). The EC/RM7823A LED provide positive visual indication of the program sequence: POWER, FLAME and ALARM.

4.1.1 Fig. 6. Sequence status LEDs

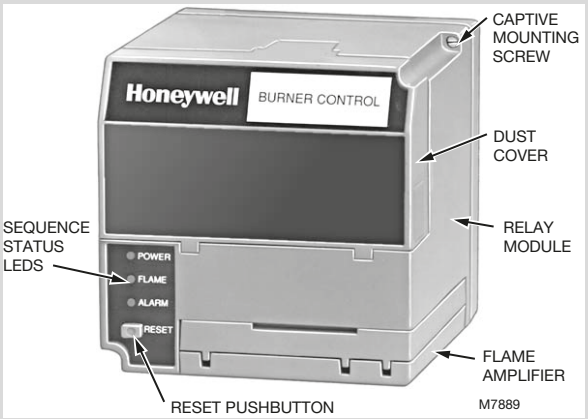

4.1.2 Table 5. LED sequence status display information

Burner Sequence	LED Energized
Standby	POWER
Run	POWER and FLAME
Reset/Alarm Test	POWER and ALARM

4.1.3 Standby

The EC/RM7823A is ready to respond to sensing of a flame or flame simulating condition. The green POWER LED blinks every four seconds, indicating that the relay module is performing internal hardware checks.

4.1.4 Run

The EC/RM7823A pulls in the internal 2x internal SPDT relays and turns on the FLAME LED when a flame or flame simulating condition exists. The relay module is now in the Run sequence.

4.2 Static Checkout

After checking all wiring, perform this checkout before installing the EC/RM7823A on the sub-base. These tests verify the Q7800 Wiring Sub-base is wired correctly, and the external controllers, limits, interlocks, actuators, valves, transformers, motors and other devices are operating properly.

⚠ WARNING

Explosion and/or Electrical Shock Hazard.
Can cause serious injury, death or equipment damage.

1. Close all manual fuel shutoff valve(s) before starting these tests.
2. Use extreme care while testing the system. Line voltage is present on most terminal connections when power is on.
3. Open the master switch before installing or removing a jumper on the sub-base.
4. Before continuing to the next test, be sure to remove test jumper(s) used in the previous test.
5. Replace all limits and interlocks that are not operating properly. Do not bypass limits and interlocks.

⚠ CAUTION

Equipment Damage Hazard.
Improper testing will cause serious internal damage.

– Do not perform a dielectric test with the EC/RM7823A installed. Internal surge protectors can break down and conduct a current. This can cause the EC/RM7823A to fail the dielectric test or possibly destroy the internal lightning and high current protection.

4.3 Equipment Recommended

1. Voltmeter (1M ohm/volt minimum sensitivity) set on the 0 to 300 Vac scale.
2. Two jumper wires, no. 14 wire, insulated, 12 in. (305 mm) long with insulated alligator clips at both ends.

4.4 General Instructions

1. Perform all applicable tests listed in Static Checkout, Table 6, in the order listed.
2. Make sure all manual fuel shutoff valve(s) are closed.
3. Perform only those tests designated for the specific EC/RM7823A model being tested.
4. Raise the setpoint of the operating controller to simulate a call for heat.
5. For each test, open the master switch and install the jumper wire(s) between the sub-base wiring terminals listed in the Test Jumpers column.
6. Close the master switch before observing operation.
7. If there is no voltage or the operation is abnormal, check the circuits and external devices as described in the last column.
8. Check all wiring for correct connections, tight terminal screws, correct wire, and proper wiring techniques. Replace all damaged or incorrectly sized wires and tighten any loose terminal screws.
9. Replace faulty controllers, limits, interlocks, actuators, valves, transformers, motors and other devices as required.
10. Make sure normal operation is obtained for each required test before continuing the checkout.
11. After completing each test, be sure to remove the test jumper(s).

⚠ WARNING

Explosion hazard.
Can cause serious injury or death.

– Be sure all manual fuel shutoff valves are closed.

4.4.1 Table 6. Static checkout.

Test Number	Test Jumpers	Voltmeter	Normal Operation	If Operation is Abnormal, Check the Items Listed Below
1	—	L2-3	Line voltage at terminal 3.	1. Master Switch. 2. Power connected to the master switch. Overload protection (fuse, circuit breaker, etc.) has not opened the power line
2	8-9	—	Load operation without flame sighting.	Load connections to terminals 8 and 9.
3	8-10	—	Load operation when flame detected.	Load connections to terminals 8 and 10.
4	13-14	—	Load operation without flame sighting.	Load connections to terminals 13 and 14.
5	13-15	—	Load operation when flame detected.	Load connections to terminals 13 and 15.
FINAL	ALL	**CAUTION!** **Equipment Damage Hazard.** **Leaving jumpers in place will damage the equipment.** After completing these tests, open the master switch and remove all test jumpers from the sub-base terminals. Remove any bypass jumpers from limits.		

5 SAFETY AND SECURITY

5.1 Physical device protection

Device shall be accessible to authorized personnel only – Installation on publicly accessible places is not recommended as this could lead to unwanted and potentially unsafe changes to device (wiring, configuration, etc).

It is recommended to lock the device in an enclosed cabinet with access allowed only to approved and trained personnel. Also, it is strongly advised to keep all the wiring of device physically secure.

Physical protection of the device is applied via Run/Test switch label/seal. It is intended to prevent and detect unauthorized access.

5.2 Modbus & DDL Interface security

Any conducts critical to device functionality (DDL, Modbus lines etc.) shall be physically protected (installed outside public access) since they could be damaged or tampered-with by unauthorized people, either accidentally or for purpose.

Modbus RS-485 protocols do not support security features. For the Honeywell proprietary DDL interface - only DDL devices (S7800, S7810) shall be connected to the Burner Controller DDL line.

5.3 License agreement

Copying and reverse engineering is prohibited by the law.

6 DISPOSAL

Devices with electronic components:

WEEE Directive 2012/19/EU – Waste Electrical and Electronic Equipment Directive



At the end of the product life (number of operating cycles reached), dispose of the packaging and product in a corresponding recycling centre. Do not dispose of the unit with the usual domestic refuse. Do not burn the product. On request, old units may be returned carriage paid to the manufacturer in accordance with the relevant waste legislation requirements.

ПРОМЭЛЕКТРОНИКА / sales@prom-elec.com

FOR MORE INFORMATION

The Honeywell Thermal Solutions family of products includes Honeywell Combustion Safety, Eclipse, Exothermics, Hauck, Kromschröder and Maxon. To learn more about our products, visit ThermalSolutions.honeywell.com or contact your Honeywell Sales Engineer.

Honeywell Process Solutions
Honeywell Thermal Solutions (HTS)
2101 CityWest Blvd
Houston, TX 77042
United States
ThermalSolutions.honeywell.com

Honeywell

© 2022 Honeywell International Inc.

EC7823A RM7823A · Edition 06.22

We reserve the right to make technical modifications in the interests of progress.