SIEMENS

7546

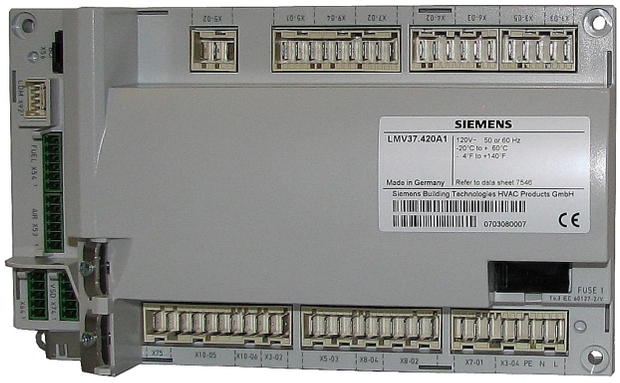

Basic unit with integrated air-fuel ratio control for forced draft burners

LMV37.400Ax
LMV37.420Ax

The LMV37.4 burner management system is a microprocessor-based burner control with matching system components for control and supervision of forced draft burners of medium to high capacity.

The LMV37.4 and this Data Sheet are intended for OEMs which integrate the units in their products!

Use

Microprocessor-controlled LMV37.4 for single-fuel burners of any capacity, with electronic fuel-air ratio control, with up to 2 actuators, and with integrated gas valve proving.

The system components (AZL2 display and operating unit, actuators) are connected directly to the LMV37.4. All safety-relevant digital inputs and outputs of the LMV37.4 are supervised via a contact feedback network. The unit parameters can be set using either the AZL2 display and operating unit or the ACS410 PC software.

- Type-tested and approved in accordance with DIN EN 298
- Applications in accordance with EN 676: Automatic forced draft burners for gaseous fuels
- Applications in accordance with EN 267: Forced draft burners for liquid fuels

For Europe

For intermittent operation, the ionization probe or the optical detectors – QRA UV flame detector, QRB1/QRB3 photoresistive detector, QRB4 yellow-flame detector, or QRC blue-flame detector – can be used in connection with the LMV37.4.
Continuous operation is possible only when using an ionization probe.

For North America

For intermittent operation, the ionization probe or the optical detectors – QRA UV flame detector, QRB1/QRB3 photoresistive detector, or QRB4 yellow-flame detector – can be used in connection with the LMV37.4.
Continuous operation is possible only when using an ionization probe.

ПРОМЭЛЕКТРОНИКА / sales@prom-elec.com

Disclaimer

Please note that this translation may not fully reflect all linguistic nuances, technical terminology, or cultural context of the original text. Although it has been prepared with due care, variations in content or interpretation cannot be entirely excluded. This translation is provided for general informational purposes only and shall **not** be regarded as legally binding or as the final version. For any official or legally binding matters, reference should always be made to the **original version** in German.

Features

The following items are integrated into the LMV37.4:

- Burner control complete with valve proving system
- Electronic air-fuel ratio control system for a maximum of 2 SQM3 or SQN1 actuators
- Control of VSD air fan
- Modbus interface
- OCI410 BC interface module between the LMV37.4 and PC

Notes



Warning!
All safety, warning and technical notes given in the Basic Documentation of the LMV37.4 (P7546) also apply to this document!

Supplementary documentation

User Documentation for Modbus Display and operating unit AZL2 ..... A7541

Environmental Product Declaration LMV2 / LMV3 ..... E7541 *)

Installation and Operating Instructions PC Software ACS410 ..... J7352

Basic Documentation LMV37.4 ..... P7546

Product Range Overview LMV2 / LMV3 ..... Q7541

*) On request

Applied directives:

- Low-voltage directive 2014/35/EC
- Directive for pressure devices 2014/68/EU
- Gas Appliances Regulation (EU) (EU) 2016/426
- Electromagnetic compatibility EMC (immunity) *) 2014/30/EC

*) The compliance with EMC emission requirements must be checked after the burner management system is installed in equipment

Compliance with the regulations of the applied directives is verified by the adherence to the following standards / regulations:

- Automatic burner control systems for burners and appliances burning gaseous or liquid fuels DIN EN 298
- Safety and control devices for gas burners and gas burning appliances - Valve proving systems for automatic shut-off valves DIN EN 1643
- Gas/air ratio controls for gas burners and gas burning appliances - Part 2: Electronic types DIN EN 12067-2
- Safety and control devices for burners and appliances burning gaseous and/or liquid fuels — General requirements DIN EN 13611
- Safety and control devices for gas burners and gas-burning appliances - Particular requirements Part 1: Automatic and semi-automatic valves ISO 23552-1
- Automatic electrical controls for household and similar use Part 2-5: Particular requirements for automatic electrical burner control systems DIN EN 60730-2-5

The relevant valid edition of the standards can be found in the declaration of conformity!

Note on **EN 60335-2-102**
Household and similar electrical appliances – Safety
Part 2-102: Particular requirements for gas, oil, and solid-fuel burning appliances having electrical connections. The electrical connections of the LMV37.4 comply with the requirements of EN 60335-2-102.

Note on the Environmental Product Declaration (EPD).
The Environmental Product Declaration for the LMV37.4 includes a full life cycle assessment (LCA) and can be accessed via the following link:
https://sid.siemens.com/v/u/A6V13130065

EAC Conformity mark (Eurasian Conformity mark)

UKCA conformity mark (UK compliance)

China RoHS
Hazardous substances table:
http://www.siemens.com/download?A6V10883536

Type							
LMV37.400A2	---	---	---	●	●	●	●
LMV37.420A1	●	●	●	●	●	●	●

Life cycle

The LMV37.4 has a designed lifetime* of 250,000 burner startup cycles which, under normal operating conditions in heating mode, corresponds to approx. 10 years of usage (starting from the date of manufacture on the type label). This lifetime is based on the endurance tests specified in standard DIN EN 298. A summary of the conditions has been published by the European Control Manufacturers Association (Afecor) (www.afecor.org).

The designed lifetime is based on use of the LMV37.4 according to the manufacturer's Data Sheet and Basic Documentation. After reaching the designed lifetime in terms of the number of burner startup cycles, or the respective time of usage, the LMV37.4 is to be replaced by authorized personnel.

* The designed lifetime is not the warranty time specified in the Terms of Delivery

Disposal notes

The LMV37.4 contains electrical and electronic components and must not be disposed of together with domestic waste. Local and currently valid legislation must be observed.

System overview

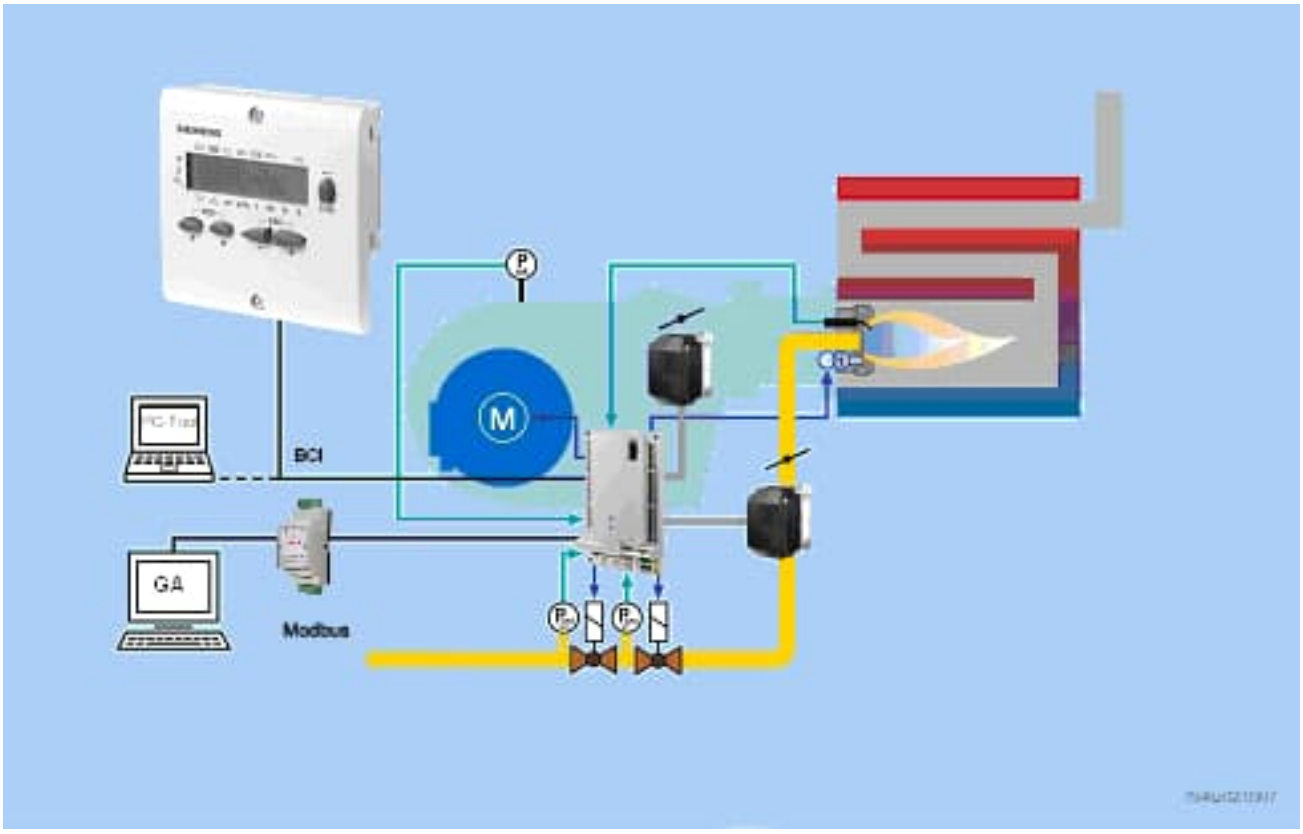

The diagram shows the full scope of functions of the LMV37.4. The actual functions are to be determined based on the respective execution / configuration!

Ordering

Burner control

LMV37.4
The LMV37.4 basic unit is the actual burner control featuring all-polar input/output terminals. The LMV37.4 has no operating elements. Operation via detached ancillary units for wire-bound communication.
See Basic Documentation P7546.



Article no.	Type	Mains voltage	Parameter set	Detectors	TSA	
					Gas	Oil
BPZ:LMV37.400A2	**LMV37.400A2**	AC 230 V	Europa	QRA2/QRA4/QRA10 UV flame detector, QRB1/QRB3 photoresistive detector, QRB4 yellow-flame detector, QRC blue-flame detector, ionization probe	3 s	5 s
BPZ:LMV37.420A1	**LMV37.420A1**	AC 120 V	North America	QRA2/QRA4 UV flame detector, QRB1/QRB3 photoresistive detector, QRB4 yellow-flame detector, ionization probe	5 s	5 s

Accessories (must be ordered separately)

Service tools

OCI410 BC interface module between the LMV37.4 and PC
Article no.: **BPZ:OCI410**
Facilitates viewing, handling and recording setting parameters on site with the help of the ACS410 software package.
See Data Sheet N7616.



OCI412.10 interface with galvanic separation
Article no.: **BPZ:OCI412.10**
The OCI412.10 interface serves as the interface between the LMV37.4 and a Modbus system, such as a building automation system (BAS). The Modbus interface is based on the RS-485 standard.
See Data Sheet N7615.



ACS410 PC software
Article no.: **BPZ:ACS410**
PC software for parameterization and visualization of the LMV37.4.
See Software Documentation J7352.

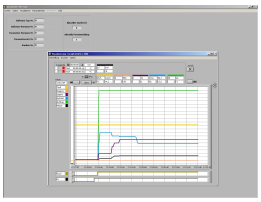

Accessories (must be ordered separately) (continued)

Display and operating units

AZL21.00A9 display and operating unit
Article no.: **BPZ:AZL21.00A9**
Remote unit, choice of mounting methods, 8-digit LCD, 5 buttons, BC interface for LMV37.4, degree of protection IP40.
See Data Sheet N7542.



AZL23.00A9 display and operating unit
Article no.: **BPZ:AZL23.00A9**
Remote unit, choice of mounting methods, 8-digit LCD, 5 buttons, BC interface for LMV37.4, degree of protection IP54.
See Data Sheet N7542.



Cables

AGV50.100
Article no.: **BPZ:AGV50.100**
AGV50.100 signal cable for the AZL2 display and operating unit, with RJ11 connector, length 1 m, pack of 10.

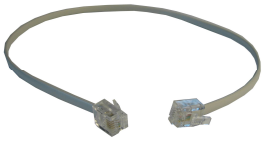

AGV50.300
Article no.: **BPZ:AGV50.300**
AGV50.300 signal cable for the AZL2 display and operating unit, with RJ11 connector, length 3 m, pack of 10.

Flame detectors

QRA2
UV flame detector for use with Siemens burner controls, for the supervision of gas flames and yellow/blue-burning oil flames as well as for ignition spark proving. Plastic-encapsulated design, metalized to prevent static charging caused by the air flow of the fan, for direct mounting on the burner. The detectors can be supplied with or without securing flange and clamp.
See Data Sheet N7712.



QRA4
UV flame detector for use with Siemens burner controls, for the supervision of gas flames and yellow/blue-burning oil flames as well as for ignition spark proving.
See Data Sheet N7711.



QRA10
UV flame detector for use with Siemens burner controls, for the supervision of gas flames and yellow/blue-burning oil flames as well as for ignition spark proving. Detector housing made of die-cast aluminum with a 1" threaded socket and connection facility for cooling air. The housing of this detector is fastened with a bayonet lock, either directly on the 1" threaded socket or on the AGG06 quartz-glass lens holder. The 1" threaded socket can be screwed onto a viewing tube or onto the AGG07 ball head. The Pg cable gland can be removed and replaced, if some other detector cable shall be used.
See Data Sheet N7712.



QRB1
Photo resistive flame detector for use with Siemens burner controls, for the supervision of oil flames in the visible light spectrum. The QRB1 photoresistive detector is used primarily in connection with burner controls for smaller burners in intermittent operation.
See Data Sheet N7714.



QRB3
Photo resistive flame detector for use with Siemens burner controls, for the supervision of oil flames in the visible light spectrum. The QRB3 photoresistive detector is used primarily in connection with burner controls for smaller burners in intermittent operation.
See Data Sheet N7714.



QRB4
Yellow flame detector for use with Siemens burner controls, for the supervision of oil flames in the visible light spectrum. The QRB4 yellow-flame detector is used in connection with burner controls for oil burners in intermittent operation.
Refer to data sheet N7720.



QRC
Blue-flame detector for use with Siemens burner controls, for the supervision of blue- or yellow-burning oil or gas flames. The QRC blue-flame detector is used primarily in connection with burner controls for smaller burners in intermittent operation.
See Data Sheet N7716.

Frontal illumination:



Lateral illumination:



Accessories (must be ordered separately) (continued)

Actuators

SQM33.4
Rated torque 1.2 Nm (0.8 Nm holding torque when dead), running time 5 s, stepper motor, front mounting, D-type drive shaft.
See Data Sheet N7813.

SQM33.5
Rated torque 3 Nm (2.6 Nm holding torque when dead), running time 5 s, stepper motor, front mounting, D-type drive shaft.
See Data Sheet N7813.



SQM33.7
Rated torque 10 Nm (6 Nm holding torque when dead), running time 17 s, stepper motor, front mounting, D-type drive shaft.
See Data Sheet N7813.

SQN1
Rated torque 1 Nm (0.2 Nm holding torque when dead), running time 5 s, stepper motor, front mounting, D-type drive shaft.
See Data Sheet N7803.



Accessories (must be ordered separately) (continued)

Connector sets

AGG3.131
Article no.: **BPZ:AGG3.131**
Complete RAST2.5/RAST3.5/RAST5 connector set for gas and oil applications, individually packed.

AGG3.132
Article no.: **BPZ:AGG3.132**
Complete RAST2.5/RAST3.5/RAST5 connector set for gas and oil applications, pack of 10.

Example: Terminal X5-02



AGG3.131	AGG3.132	Connector type	Terminal	Description
1	10	RAST5	X3-02	Air pressure switch (LP)
1	10	RAST5	X3-03	Burner flange
1	10	RAST5	X3-04	Power supply (L, N, PE) for safety loop (SK)
1	10	RAST5	X3-05	• Alarm (AL) • Fan motor (M)
1	10	RAST5	X4-02	Ignition (Z)
1	10	RAST5	X5-01	• Gas pressure switch-min (Pmin) • Oil pressure switch-min (Pmin)
1	10	RAST5	X5-02	• Gas pressure switch-max (Pmax) • Oil pressure switch-max (Pmax)
1	10	RAST5	X5-03	External load controller (LR)
1	10	RAST5	X6-03	Safety valve (SV)
1	10	RAST5	X7-01	Fuel valve (V2)
1	10	RAST5	X7-02	Fuel valve (V3)
1	10	RAST5	X8-02	Fuel valve (V1)
1	10	RAST5	X8-04	• Reset • Operating mode display (B4)
1	10	RAST5	X9-04	• Gas pressure switch (Pmin/Pmax) • Pressure switch valve proving (P LT)
1	10	RAST5	X10-05	Ionization probe, QRB1/QRB3 photoresistive detector, QRB4 yellow-flame detector, QRC blue-flame detector
1	10	RAST5	X10-06	QRA2/QRA4 UV flame detector
1	10	RAST5	X75	Fuel meter
1	10	RAST3.5	X74	• Variable speed drive (VSD) • Load output (0–10 V)
1	10	RAST3.5	X64	• PWM fan • Input for the load controller (LR) (4–20 mA)
1	10	RAST2.5	X92	Modbus (COM)

Accessories (must be ordered separately) (continued)

AGG9
Single connectors
Packing unit 200 in total.

Example Terminal X5-03



Article no.	Type	Type of connector	Terminal	Description
BPZ:AGG9.203	**AGG9.203**	RAST5	X3-02	Air pressure switch (LP)
BPZ:AGG9.204	**AGG9.204**	RAST5	X3-03	Burner flange
BPZ:AGG9.206	**AGG9.206**	RAST5	X8-04	• Reset • Operating display
BPZ:AGG9.209	**AGG9.209**	RAST5	X10-06	QRA2/QRA4/QRA10 UV flame detectors
BPZ:AGG9.217	**AGG9.217**	RAST5	X75	Fuel meter
BPZ:AGG9.303	**AGG9.303**	RAST5	X3-05	• Alarm (AL) • Fan motor (M)
BPZ:AGG9.304	**AGG9.304**	RAST5	X4-02	Ignition (Z)
BPZ:AGG9.306	**AGG9.306**	RAST5	X5-01	• Gas pressure switch-min (Pmin) • Oil pressure switch-min (Pmin)
BPZ:AGG9.307	**AGG9.307**	RAST5	X5-02	• Gas pressure switch-max (Pmax) • Oil pressure switch-max (Pmax)
BPZ:AGG9.309	**AGG9.309**	RAST5	X6-03	Safety valve (SV)
BPZ:AGG9.310	**AGG9.310**	RAST5	X7-01	Fuel valve (V2)
BPZ:AGG9.311	**AGG9.311**	RAST5	X7-02	Fuel valve (V3)
BPZ:AGG9.313	**AGG9.313**	RAST5	X9-04	• Gas pressure switch (Pmin/Pmax) • Pressure switch valve proving (P LT)
BPZ:AGG9.403	**AGG9.403**	RAST5	X5-03	External load controller (LR)
BPZ:AGG9.406	**AGG9.406**	RAST5	X8-02	Fuel valve (V1)
BPZ:AGG9.501	**AGG9.501**	RAST5	X3-04	• Power supply • Safety loop (SK)
BPZ:AGG9.504	**AGG9.504**	RAST5	X10-05	Ionization probe, QRB1/QRB3 photoresistive detector, QRB4 yellow-flame detector, QRC blue-flame detector
BPZ:AGG9.853	**AGG9.853**	RAST3.5	X64	• PWM fan • Load controller input (4–20 mA)
BPZ:AGG9.853	**AGG9.853**	RAST3.5	X74	• Variable speed drive (VSD) • Load output (0/0–10 V)

Accessory set

AGG5.310
Article no.: **BPZ:AGG5.310**
Accessories set speed control, for burner management systems, composed of sensor disk ∅ 50, sensor and mounting set.
Refer to chapter ‘Mounting the speed sensor’.



Accessories (must be ordered separately) (continued)

Butterfly valve with mounting plate

VKF1x
Butterfly valve with mounting plate for mounting between threaded flanges in gas trains.
Refer to data sheet N7673.



Note
Only suitable for SQM33.5, SQM45, and SQM46.x95x8 actuators.

ASK33.1
Article no.: **BPZ:ASK33.1**
Larger mounting plate required to replace existing mounting plate. Required for mounting SQM33.5, SQM45, or SQM46.x95x8 actuators.
Refer to Data Sheet N7646.



ASK33.2
Article no.: **BPZ:ASK33.2**
Additional mounting plate is required for mounting the actuator SQN13.
Refer to Data Sheet N7646.



Transformer

A5Q20002669
Article no.: **BPZ:A5Q20002669**
Transformer to increase ionization voltage for AC 120 V devices.
See User Documentation A7541.2.



Connection and internal diagram of the LMV37.4

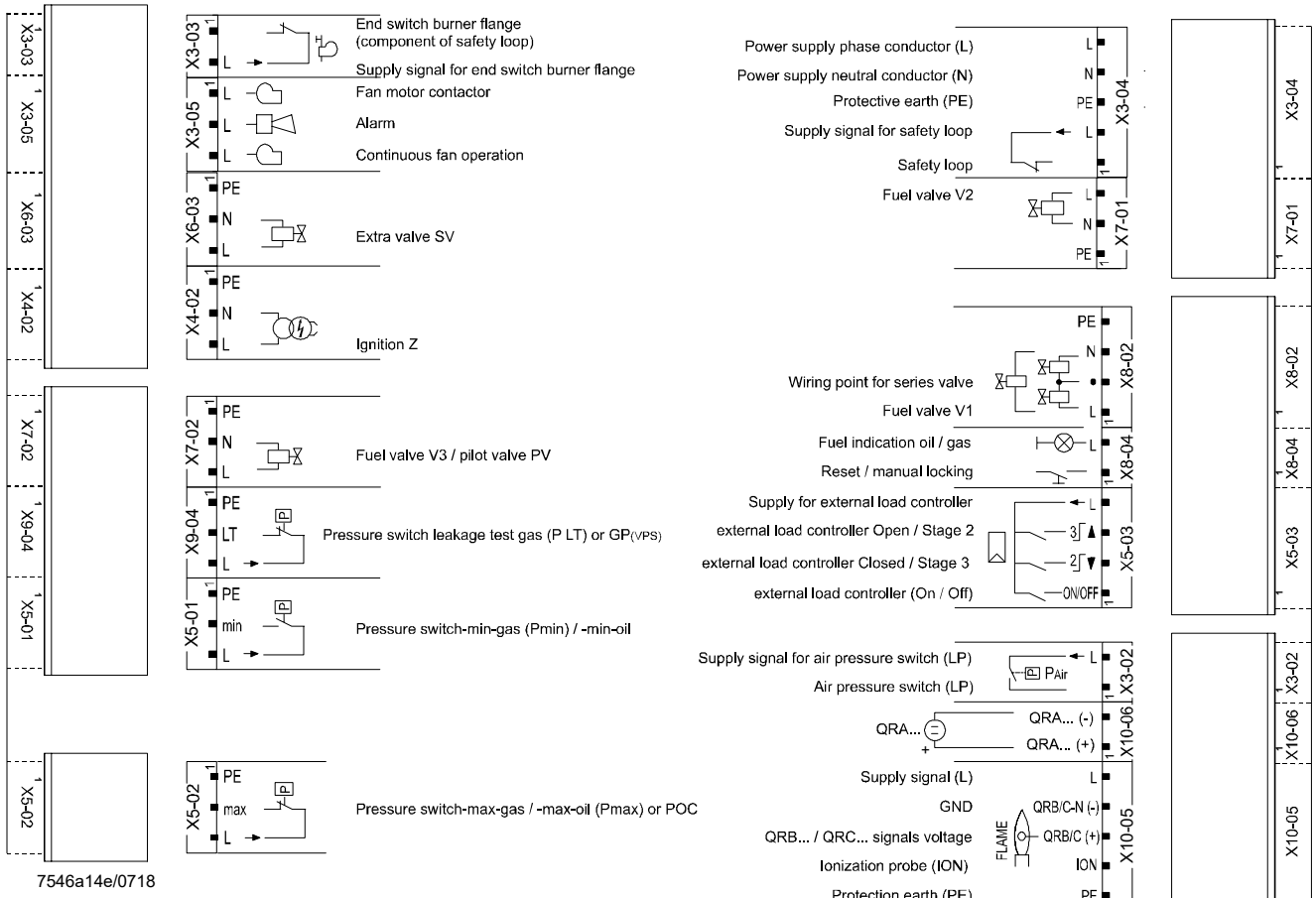

Shielding:

For shielding the cables on the VSD, refer to:

- Siemens *SED2* VSD Commissioning Manual (G5192), chapters 4 and 7, or
- Danfoss Operation Manual *VLT 6000* (MG60A703), chapter *Installation*

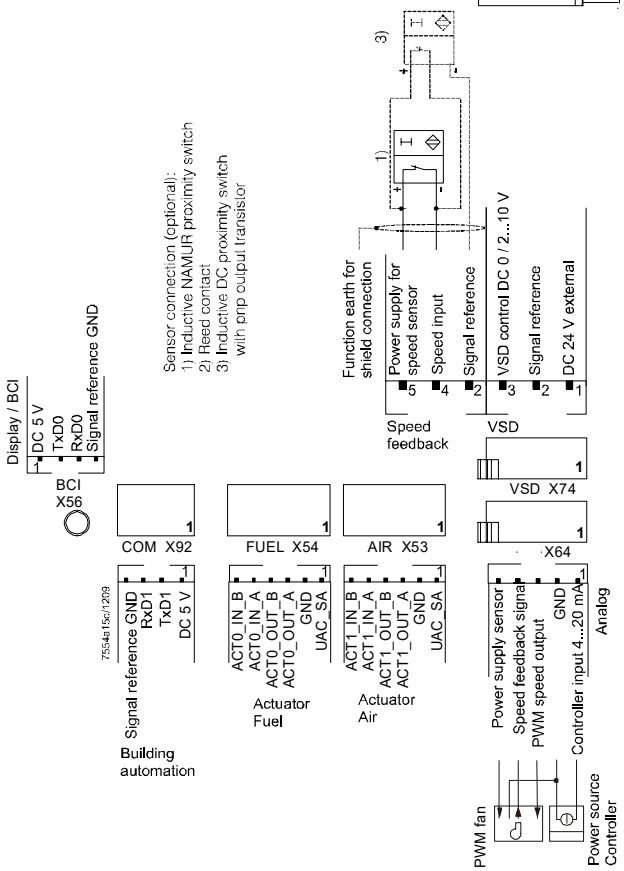

LMV37.4 basic unit

General

Mains voltage - LMV37.420A1 - LMV37.400A2	 AC 120 V -15% / +10% AC 230 V -15% / +10%
Mains frequency	50 / 60 Hz ±6%
Power consumption	<30 W (typically)
Safety class	I with parts according to II and III to EN 60730-1:2016
Degree of protection	IP00 to EN 60529:1991 + A1:2000 + A2:2013
☞	Note The burner or boiler manufacturer must ensure degree of protection IP40 for LMV37.4, as per EN 60529:1991 + A1:2000 + A2:2013 through adequate installation.
Mode of operation	Type 2B in accordance with EN 60730-1:2016
Rated surge voltage	In accordance with EN 60730-1:2016, section 20 (OC III)
Voltage and current for the purposes of the EMC emitted interference tests	The emitted interference measurement test takes place with mains voltage and maximum power consumption

Terminal loading *Inputs*

Permissible primary fuse (Si) (external)	Max. 16 AT



Caution!
Risk of damage to the switching contacts!
If the external primary fuse (Si) is blown due to overload or short-circuit at the terminals, the LMV37.4 must be replaced.

Unit fuse F1 (internal)	6.3 AT (IEC 60127-2:2014))
Mains supply: Input current depending on the operating state of the unit	
Undervoltage	
• Safety shutdown from operating position at mains voltage	
- LMV37.420A1	Ca. AC 93 V
- LMV37.400A2	Ca. AC 186 V
• Restart on rise in mains voltage	
- LMV37.420A1	Ca. AC 96 V
- LMV37.400A2	Ca. AC 195 V
Status inputs: Status inputs (with the exception of the safety loop) of the contact feedback network are used for system supervision and require mains-related input voltage	
• Input safety loop	Refer to chapter ‘Terminal load outputs’
• Input currents and input voltages	
- UeMax	UN +10 %
- UeMin	UN -15 %
- IeMax	1.5 mA peak
- IeMin	0.7 mA peak
• Contact material recommendation for external signal sources (air pressure switch, pressure switch-min, pressure switch-max, etc.)	Gold-plated silver contacts
• Transition / settling behavior / bounce	
- Perm. bounce time of contacts when switching on / off	Max. 50 ms (after the bounce time, contact must stay closed or open)
• UN	
- LMV37.420A1	AC 120 V
- LMV37.400A2	AC 230 V
• Voltage detection	
- ON	
- LMV37.420A1	AC 90...132 V
- LMV37.400A2	AC 180...253 V
- OFF	
- LMV37.420A1	<AC 40 V
- LMV37.400A2	<AC 80 V

Terminal loading *Outputs*

Total contact loading:	
• Rated voltage	
- LMV37.420A1	AC 120 V, 50 / 60 Hz
- LMV37.400A2	AC 230 V, 50 / 60 Hz
• Unit input current (safety loop) from: - Fan motor contactor - Ignition transformer - Fuel valves - Oil pump / magnetic clutch	Max. 5 A
Individual contact loading:	
Fan motor contactor	
• Rated voltage	
- LMV37.420A1	AC 120 V, 50 / 60 Hz
- LMV37.400A2	AC 230 V, 50 / 60 Hz
• Rated current	
- LMV37.400A2	2 A
- LMV37.420A1	1,6 A pilot duty load declaration to UL372
• Power factor	Cosφ >0.4
Alarm output	
• Rated voltage	
- LMV37.420A1	AC 120 V, 50 / 60 Hz
- LMV37.400A2	AC 230 V, 50 / 60 Hz
• Rated current	1 A
• Power factor	Cosφ >0.4
Ignition transformer	
• Rated current	
- LMV37.400A2	2 A
- LMV37.420A1	1.6 A pilot duty load declaration to UL372 or 250 VA ignition load declaration to UL372
• Power factor	Cosφ >0.2
Fuel valves	
• Rated voltage	
- LMV37.420A1	AC 120 V, 50 / 60 Hz
- LMV37.400A2	AC 230 V, 50 / 60 Hz
• Rated current	
- LMV37.400A2	2 A
- LMV37.420A1	1.6 A pilot duty load declaration to UL372
• Power factor	Cosφ >0.4
Operation display	
• Rated voltage	
- LMV37.420A1	AC 120 V, 50 / 60 Hz
- LMV37.400A2	AC 230 V, 50 / 60 Hz
• Rated current	0.5 A
• Power factor	Cosφ >0.4
Safety valve (magnetic clutch / oil pump)	
• Rated voltage	
- LMV37.420A1	AC 120 V, 50 / 60 Hz
- LMV37.400A2	AC 230 V, 50 / 60 Hz
• Rated current	
- LMV37.400A2	2 A
- LMV37.420A1	1.6 A pilot duty load declaration to UL372
• Power factor	Cosφ >0.4

Terminal loading *Outputs*

Individual contact loading:	
Connection for pressure switch	
• Rated voltage	
- LMV37.420A1	AC 120 V, 50 / 60 Hz
- LMV37.400A2	AC 230 V, 50 / 60 Hz
• Rated current	1,5 mA
• Power factor	---
Power supply for pressure switch-max / POC (terminal X5-02 pin 3)	
• IaMax	<10 mA

Analog output / load output terminal X74 pin 3

Accuracy of output voltage	±1 %

Cable lengths

Mains line AC 120 V / AC 230 V	Max. 100 m (100 pF/m)
AZL2 display and operating unit, BC interface	For installation under the burner hood or in the control panel Max. 3 m (100 pF/m)
Load controller terminal X5-03	Max. 20 m (100 pF/m)
Load controller terminal X64 (24 mA)	Max. 20 m (100 pF/m)
Safety loop / burner flange (total)	Max. 20 m (100 pF/m)
External lockout reset button	Max. 20 m (100 pF/m)
Safety valve	Max. 20 m (100 pF/m)
Load output [1])	Max. 10 m (100 pF/m)
VSD control [1])[2])	Max. 3 m (100 pF/m)
Speed input	Max. 3 m (100 pF/m)
Fuel valve (V1 / V2 / V3)	Max. 3 m (100 pF/m)
Pilot valve	Max. 3 m (100 pF/m)
Ignition transformer	Max. 3 m (100 pF/m)
Other lines	Max. 3 m (100 pF/m)

[1]) Do not run the cable together with other cables. If not observed, hum voltage might cause electromagnetic interference

[2]) Shorter cable length due to closed control loop

Specification as per EN 60730-1:2016	
Type of shutdown or interruption of each circuit	
Shutdown with microswitch	1-pole
Mode of operation	Type 2 B

Cross-sectional areas

The cross-sectional areas of the mains power lines (L, N, and PE) and, if required, the safety loop (safety limit thermostat, water shortage, etc.) must be sized for rated currents according to the selected external primary fuse.
The cross-sectional areas of the other cables must be sized in accordance with the internal unit fuse (max. 6.3 AT).

Min. cross-sectional area	0.75 mm² (single- or multi-core as per VDE 0100)

Cable insulation must meet the relevant temperature requirements and environmental conditions.

Fuses (F1) used inside the LMV37.4	6.3 AT (IEC 60127 2:2014)

Electrical connections of actuators

The fixed connected actuator cables must not be extended.

Signal cable AGV50 from AZL2 display and operating unit → BC interface	**Signal cable**	Color white Unshielded Conductor 4 x 0.141 mm² With RJ11 plug
	Cable length • AGV50.100 signal cable • AGV50.300 signal cable	 1 m 3 m
	Location	Under the burner hood (extra measures required for SKII EN 60730-1:2016

Environmental conditions	**Storage**	EN 60721-3-1:1997
	Climatic conditions	Class 1K3
	Mechanical conditions	Class 1M2
	Temperature range	-20...+60 °C
	Humidity	<95 % r.h.
	Transport	EN 60721-3-2:1997
	Climatic conditions	Class 2K2
	Mechanical conditions	Class 2M2
	Temperature range	-30...+60 °C
	Humidity	<95 % r.h.
	Operation	EN 60721-3-3:1995 + A2:1997
	Climatic conditions	Class 3K3
	Mechanical conditions	Class 3M3
	Temperature range	-20...+60 °C
	Humidity	<95 % r.h.
	Installation altitude	Max. 2,000 m above sea level



Caution!
Condensation, formation of ice and ingress of water are not permitted!

Flame supervision with ionization probe

For continuous operation!

No-load voltage at terminal X10-05 pin 2 of the ionization probe	Approx. U_{Mains}

Caution!
The ionization probe must be protected against electric shock hazard (electric shock hazard)!

Short-circuit current	Max. AC 1 mA
Required detector current	Min. DC 2.3 µA, flame display approx. 30 % When the more sensitive flame supervision is activated, the required detector current is halved (refer to chapter *Flame detection sensitivity* in the Basic Documentation P7546).
Possible detector current	Max. DC 12…30 µA, flame display approx. 100 %
Max. perm. length of detector cable (laid separately)	3 m (wire–ground 100 pF/m)

Warning!
Simultaneous operation of the QRA UV flame detector and an ionization probe is not permitted!

Note
The higher the detector cable's capacitance (cable length), the more voltage at the ionization probe, and thus the detector current, drops. Long cable lengths plus very highly resistive flames might necessitate low-capacitance detector cables (e.g. ignition cable). In spite of technical measures taken in the circuitry aimed at compensating potential adverse effects of the ignition spark on the ionization current, it must be made certain that the minimum detector current required will already be reached during the ignition phase. If this is not the case, the connections on the primary side of the ignition transformer must be changed and / or the electrodes relocated.

Threshold values when flame is supervised by an ionization probe:	
• Start prevention (extraneous light)	Flame intensity (parameter 954) ≥18 %
• Operation	Flame intensity (parameter 954) >24 %

Flame supervision with ionization probe

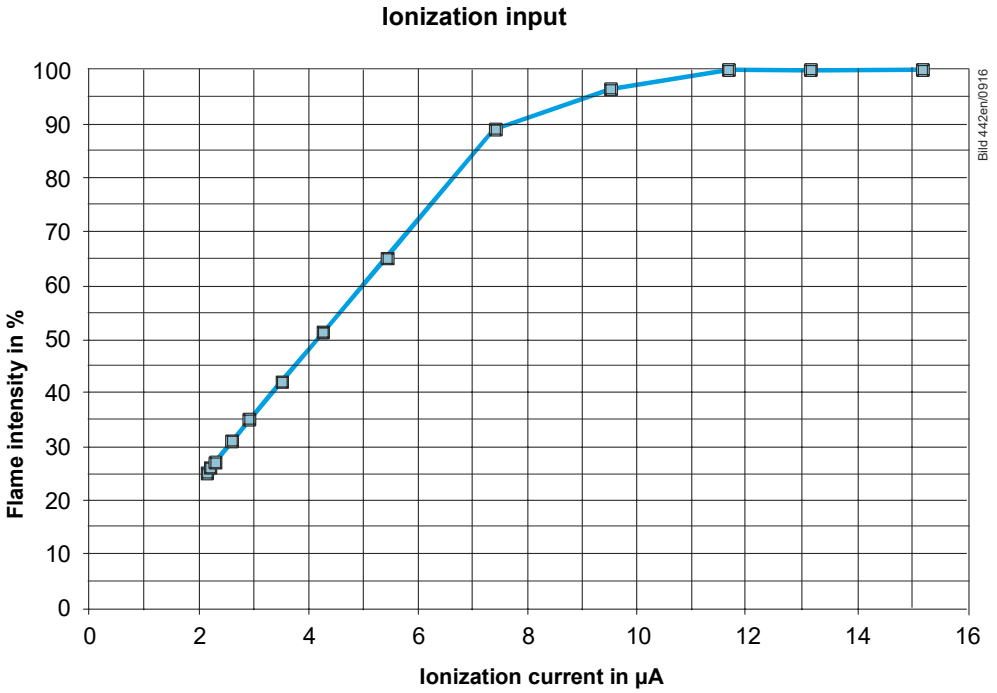

Measuring circuit for detector current measurement

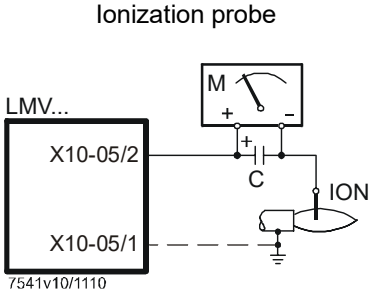

Legend	
C	Electrolytic capacitor 100...470 µF; DC 10...25 V
ION	Ionization probe
M	Microammeter Ri max. 5000 Ω

Flame supervision with QRA2/QRA4/QRA10 UV flame detector

Please note!
If the UV tubes of the QRA2/QRA4/QRA10 UV flame detectors are used for flame supervision with the LMV37.4, note that the LMV37.4 must be operated with continuous voltage (DIN EN 298) so that the LMV37.4 can detect detector faults during startup and shutdown. The LMV37.4 is generally operated with QRA2/QRA4/QRA10 UV flame detectors in intermittent mode.
For details, refer to chapter 'Technical data' in data sheet N7712 for the QRA2/QRA10 UV flame detector.
For details, refer to chapter 'Technical data' in data sheet N7711 for the QRA4 UV flame detector.

Notes
Lifetime of the UV cell.
UV cells and QRA2/QRA4/QRA10 UV flame detectors are subject to wear and tear and must be replaced as part of regular maintenance, at the latest at the end of the average lifetime of the UV cell. The lifetime of the UV cell corresponds to approx. 10,000 hours at a maximum of +50°C; higher ambient temperatures reduce the lifetime considerably.
For details, refer to chapter 'Technical data' in data sheet N7712 for the QRA2/QRA10 UV flame detector.
For details, refer to chapter 'Technical data' in data sheet N7711 for the QRA4 UV flame detector.

Operating voltage	Max. 350 V peak
Required detector current in operation	Min. 30 µA When the more sensitive flame supervision is activated, the required detector current is halved (refer to chapter *Flame detection sensitivity* in the Basic Documentation P7546).
Possible detector current in operation	Max. 600 µA
Permissible length of flame detector cable - normal cable (laid separately)	Max. 6 m
Threshold values for flame supervision with QRA UV flame detector	
- Start prevention (extraneous light)	Flame intensity (parameter 954) ≥18 %
- Operation	Flame intensity (parameter 954) >24 %

Measuring circuit for detector current measurement

UV flame detector QRA2/QRA4/QRA10

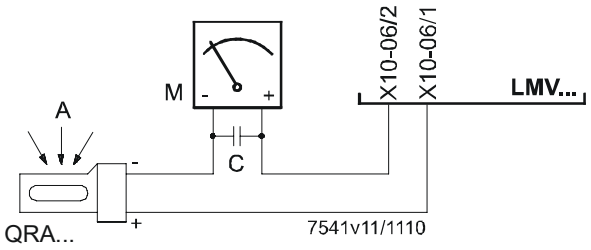

Legend

A	Incidence of light
C	Electrolytic capacitor 100...470 µF; DC 10...25 V
M	Microammeter Ri max. 5000 Ω

Warning!
- **The QRA UV flame detector input is not short-circuit-proof.**
  A short circuit from terminal X10-06 pin 2 to ground can destroy the QRA UV flame detector input.
- **Simultaneous operation of the QRA UV flame detector and an ionization probe is not permitted.**

Flame supervision with QRB1/QRB3 photoresistive detector	No-load voltage at terminal X10-05 pin 3 of the QRB1/QRB3 photoresistive detector	Approx. DC 5 V
	Permissible length of the detector cable (laid separately)	3 m (wire – wire 100 pF/m)

Note
A detector resistance of RF <500 Ω is identified as a short-circuit and leads to safety shutdown in operation as if the flame had been lost.

For this reason, the necessity of using a highly sensitive QRB1B/QRB3S photoresistive detector must be carefully assessed beforehand. Increasing line capacitance between the connection of the QRB1/QRB3 photoresistive detector and mains live '**L**' reduces sensitivity and increases the risk of detector damage from mains overvoltage. Always run detector cables separately!

Threshold values for flame supervision with QRB1/QRB3 photoresistive detector	
Start prevention (extraneous light) with **R**QRB	<400 kΩ Intensity of flame ≥10%
Operation with **R**QRB	<230 kΩ Intensity of flame >16%
Short-circuit detection with **R**QRB	<0.5 kΩ

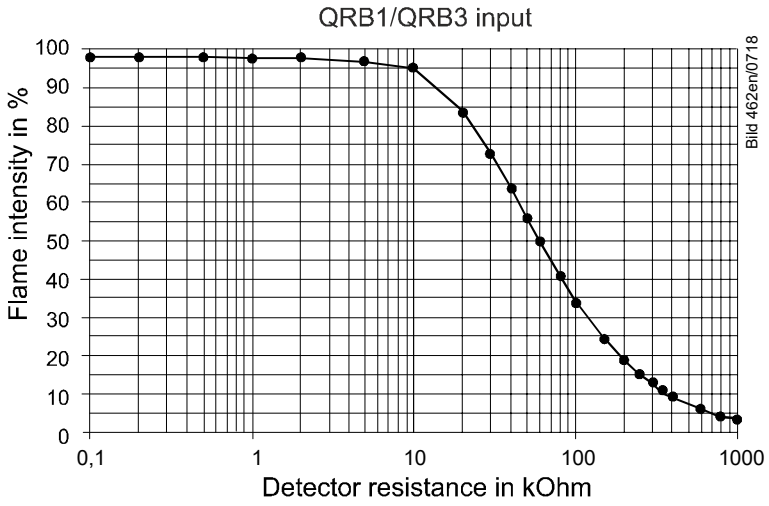

A flame detector resistance of RF <500 Ω is identified as a short-circuit and leads to safety shutdown in operation, like in the case of loss of flame.

Note
The maximum display intensity is limited to approx. 40% on the QRB1/QRB3 photoresistive detector for system-specific reasons.

Flame supervision with QRB4 yellow-flame detector	No-load voltage at terminal X10-05 pin 3 of the QRB4 yellow-flame detector	Approx. 5 V DC
	Permissible length of the detector cable (laid separately)	3 m (wire to wire 100 pF/m)
	Threshold values for flame supervision with QRB4 yellow-flame detector	
	Start prevention (extraneous light)	Flame intensity (parameter 954) ≥10%
	Operation	Flame intensity (parameter 954) >16%

Note
The maximum display intensity is limited to approx. 40% on the QRB4 yellow-flame detector for system-specific reasons (parameter 954).

Note
Connection of the cables for the QRB4 yellow-flame detector
Blue cable of the QRB4 yellow-flame detector to terminal X10-05 pin 4. Black cable of the QRB4 yellow-flame detector to terminal X10-05 pin 3. Otherwise, the QRB4 yellow-flame detector will not function.

Flame supervision with QRC blue-flame detector

Flame intensity check via the AZL2 display and operating unit.

For system-related reasons, the maximum intensity displayed by the AZL2 display and operating unit is limited to approximately 55%.

Note
The QRC blue-flame detector is only suitable for operation at 230 V AC.

Permissible length of the detector cable for the QRC blue-flame detector (laid separately)	6 m (100 pF/m core-to-core)
Start prevention (extraneous light) with I_{QRC}	Ca. 15 µA, display approx. 10 % Flame intensity (parameter 954)
Operation with I_{QRC}	Ca. 25 µA, display approx. 16 % Flame intensity (parameter 954)

	Required detector current (with flame)	Permissible detector current (without flame)	Typical detector current (with flame)
QRC	Min. 35 µA	Max. 5,5 µA	100 µA

The values given in the table above only apply under the following conditions:
- Mains voltage AC 230 V
- Ambient temperature 23 °C

Measuring circuit for detector current measurement

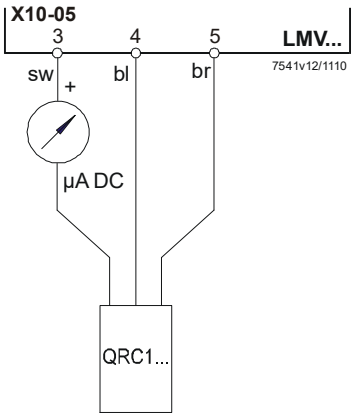

Legend

µA DC	DC-Mikroampèremeter an internal resistance of Ri = max. 5 kΩ
bl	blue
sw	black
br	brown

Dimensions

Dimensions in mm

LMV37.4

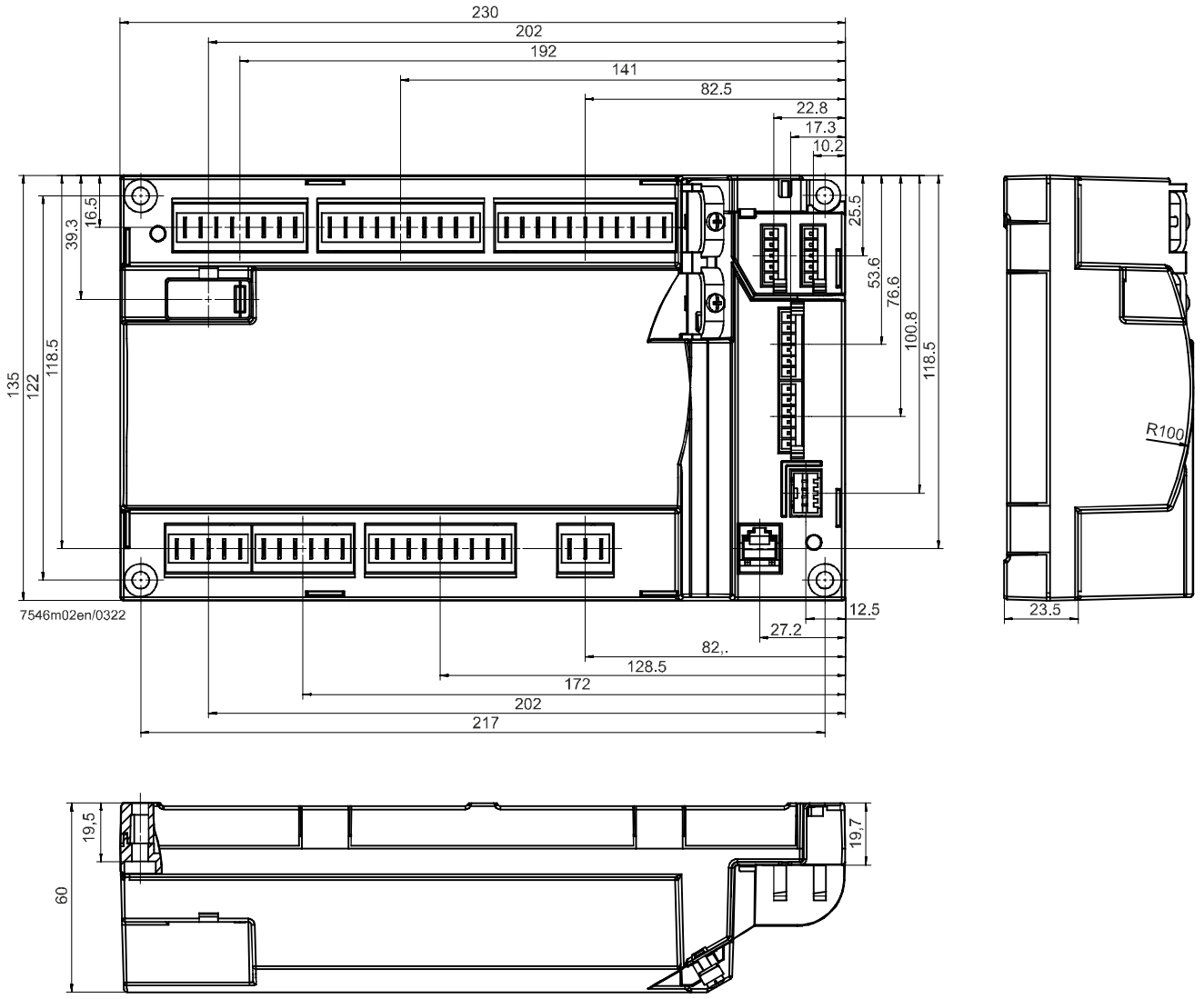

AGG5.310 / AGG5.315 mounting kit

Scope of delivery

1 1x sensor disk

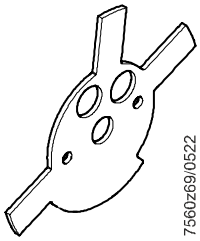

2 1x Belleville washer



3 1x fixing screw
M8 x 12 mm

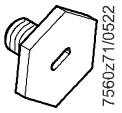

4 1x sensor holder

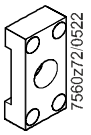

5 4x spring washers



6 4x self-tapping cheese-head screws
M3 x 10 mm

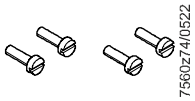

7 2x threaded plates

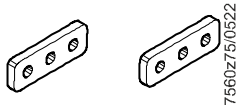

8 1x sensor

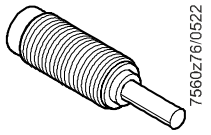

9 1x locknut



10 1x cable tie

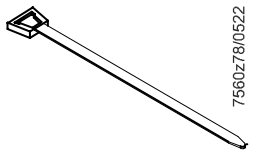

Warning!
Dangerous mixtures.
Assembly must be carried out in accordance with these instructions, as incorrect speed measurements can lead to dangerous mixtures. An annual check is necessary to ensure that the sensor disk is correctly seated together with the fixing screws, sensor holder, and sensor. Readjustment is advisable if necessary.

Step 1

Please note!
Guarantee warranty.
Contact your motor supplier regarding the warranty conditions before any interventions in the motor.

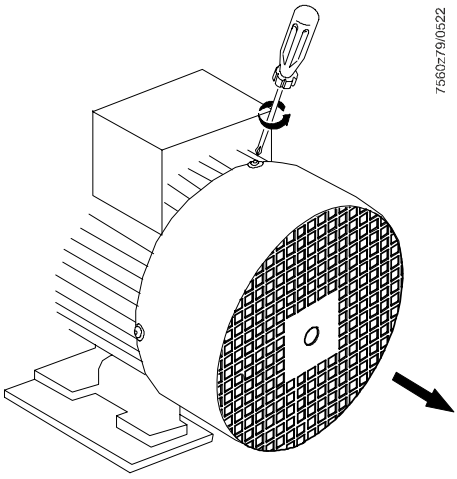

Motor example

Remove the protective hood of the motor.

Maximum thickness of the protective grating: 2 mm.

Step 2

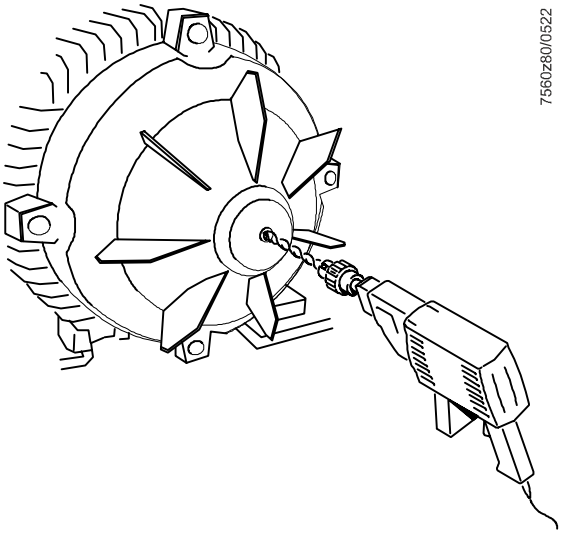

Motor example

- Bore a centering hole in the motor shaft measuring at least 18 mm in length.
  Core hole bore ∅ 6.8 mm
- Cut an M8 x 15 mm thread.
  The use of an M8 x 12 mm screw **must** be ensured.

Step 3

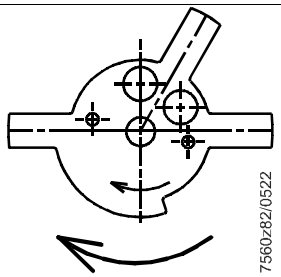

Direction of motor rotation

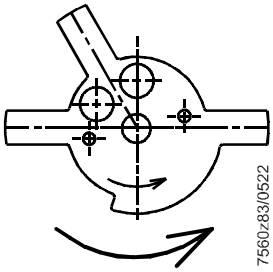

Direction of motor rotation

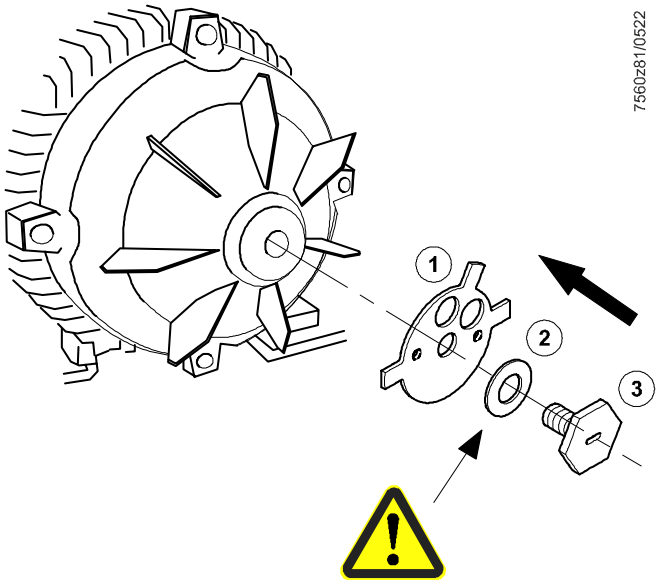

Motor example

- Mount the sensor disk ① observing the direction of motor rotation (refer to figure above)

  AGG5.310 mounting kit:
  Small speed sensor disk (∅ 50 mm) for shaft diameter 15…50 mm

  AGG5.315 mounting kit (on request):
  Large speed sensor disk (∅ 70 mm) for shaft diameter 51…70 mm

- Attach the sensor disk ① and the belleville washer ② (**IMPORTANT!)** to the motor shaft using the fixing screw ③

Step 4

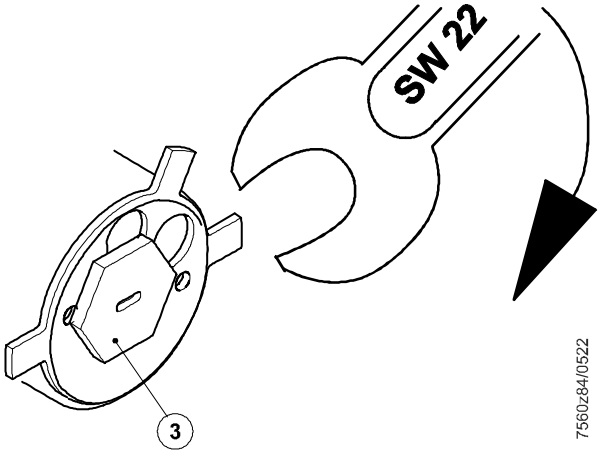

Torque:
Min. 3 Nm
Max. 6 Nm

Tighten the fixing screw ③ using a wrench (width across flats: 22).

Step 5

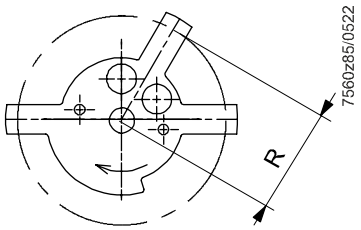

Small speed sensor disk: R = 41 mm
Large speed sensor disk: R = 51 mm

- Draw a circle (centric) by means of a pin (refer to figure **a**) with a given radius (41 mm or 51 mm respectively) on the grating of the protective hood
- Using cutters, cut through the struts on the grating for fastening the sensor holder in place (position similar to figure **b**)
- Ensure that the position of the hole for the sensor holder coincides with the position of one sensor disk tooth

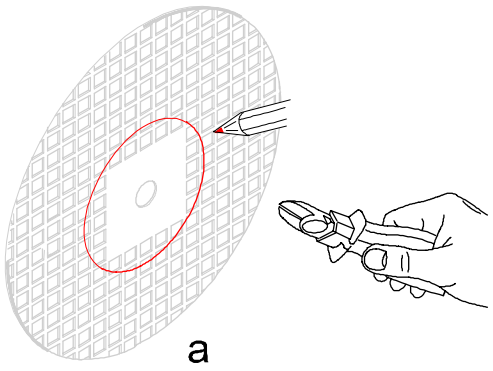

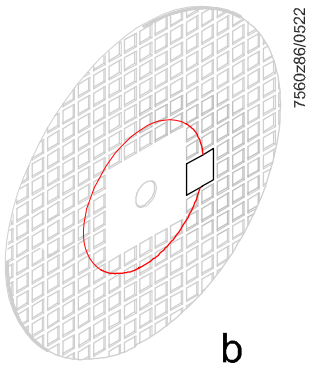

Step 6

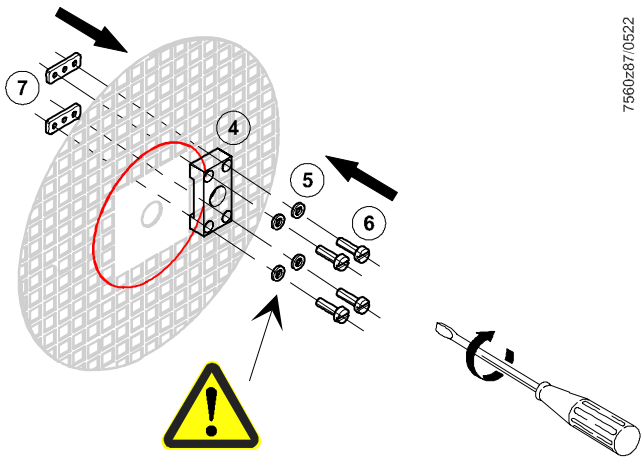

Fasten the sensor holder ④ in place with the 2 threaded plates ⑦ (rear side of the grating) by means of the 4 spring washers ⑤ (**IMPORTANT!)** and the 4 M3 x 10 mm screws to the grating (refer to figure for position).

The radius of the drawn circle should pass through the center of the hole for the sensor holder.

Step 7

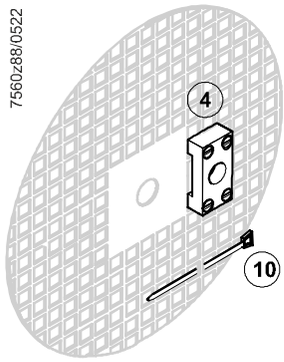

Thread the cable tie ⑩ centrally and below to the sensor holder ④ on the grating (as shown).

The cable tie is used to fasten the sensor holder in place later.

Step 8

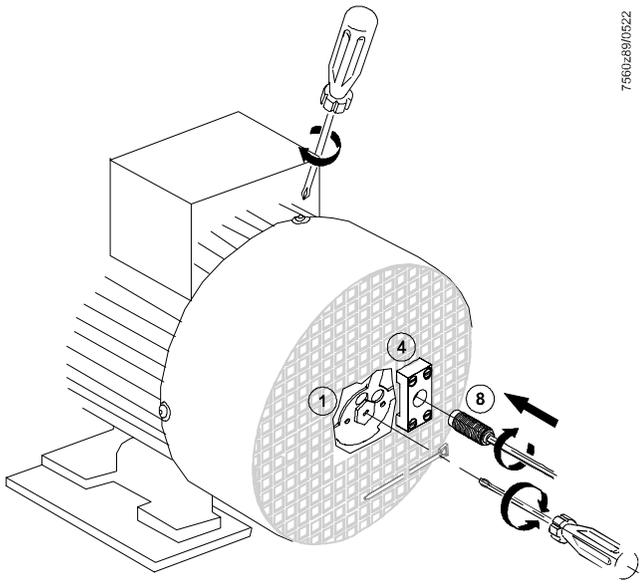

Motor example

- Reattach the protective hood to the motor
- If necessary, use the screwdriver to place the sensor disk tooth ① under the hole of the sensor holder ④
- Screw the sensor ⑧ into the sensor holder ④ until the sensor ⑧ comes into **slight contact** with a sensor disk tooth ①. The sensor disk tooth ① and the protective hood must not be deformed in the process

Step 9

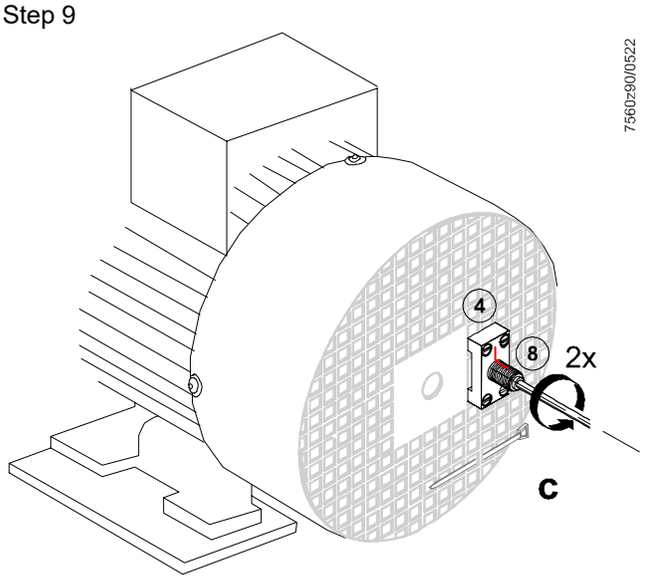

Motor example

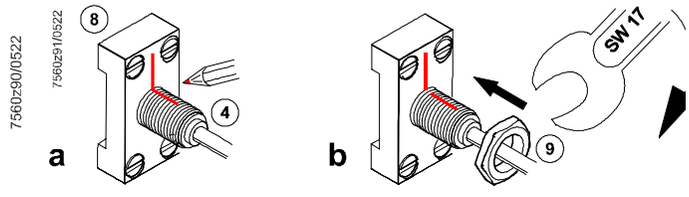

- Mark the sensor ④ and the sensor holder ⑧ (refer to figure **a**) and unscrew the sensor ④ by 2 mm (refer to figure **c**). The 2 mm correspond to 2 full revolutions
- Distance between the sensor ④ and the sensor disk ①: 2 mm ± 0.1 mm
- Then secure the sensor ④ with the locknut ⑨ using a wrench (width across flats: 17) (refer to figure **b**)

ПРОМЭЛЕКТРОНИКА / sales@prom-elec.com

Mounting instructions for the speed sensor (cont'd)

Step 10

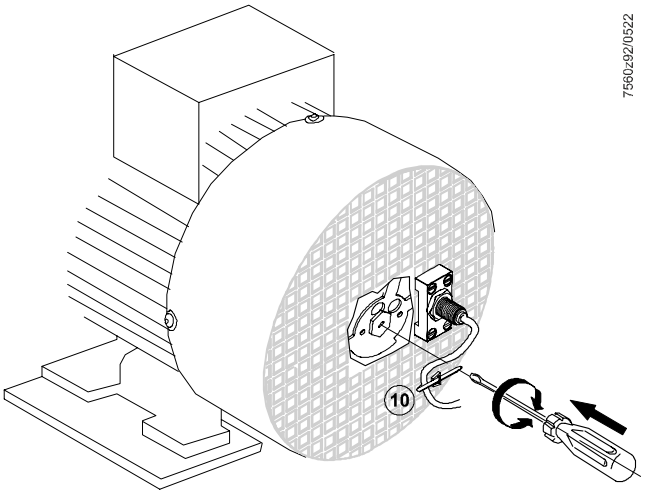

Motor example

- Fasten the sensor cable to the grating with the cable tie ⑩
- Use a screwdriver to turn the motor shaft with the sensor disk ① once around its own axis. This is necessary to ensure that no collisions occur between the sensor disk ① and the sensor ⑧
- Run the sensor cable separately and connect the sensor cable to the LMV37.4
- The connector required for the connection is included in the AGG3.131 or AGG3.132 connector set

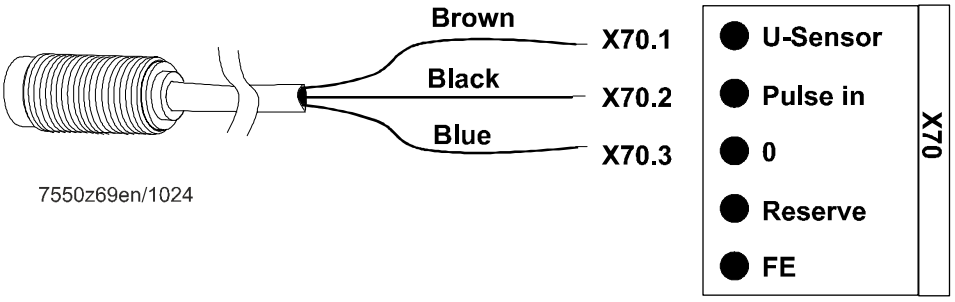

7550z69en/1024

Selection of the fan motor

1. **Fan motor supplier:** Variant **with** M8 x 15 threaded hole
2. **Standard motor:** In this variant, the M8 x 15 thread must be cut into the hole by the customer.

©2026 Siemens AG Smart Infrastructure, Berliner Ring 23, D-76437 Rastatt
Subject to change!