EUROBOX SERIES
TYPES CM...N SM...N MM...N

AUTOMATIC CONTROL SYSTEMS FOR GAS BURNERS AND GAS BURNING APPLIANCES WITH OR WITHOUT FAN (MANUAL RESET)



DESCRIPTION

This series of electronic systems is suitable to control atmospheric gas burners for non-permanent operation with or without fan in the combustion circuit.

All control units are provided with non-volatile lockout, i.e. restart from the safety shutdown condition can only be accomplished by manually resetting the system.

The control units of this series are suitable for:

- combi boilers
- heating boilers
- hot air generators
- radiant tube heaters
- water heaters.

Their technical and manufacturing characteristics and the variety of models make them suitable also for the automation of ovens, cookers, stoves and, more generally, for gas firing appliances equipped with atmospheric burner.

FEATURES

Table 1 shows the main features of this series.

Other important features are mentioned below:

- **EC** type examination certificate (EC Reg. no. 51BT3691) in accordance with the European Gas Appliance Directive 90/396 and the following amendment 93/68;
- in compliance with EN298:2003 (European standard for automatic gas burner control and flame detection systems);
- flame detection exploiting the flame rectification effect (ionization);
- two independent safety contacts in series on the gas valve output;
- electrical service life at max declared loading > 250.000 operations;
- inbuilt manual reset; some models can be provided with remote reset;
- incorporated highly efficient and completely solid-state design ignition device;
- auxiliary contact for low-power ignition or main valve control for intermittent pilot systems (this is not a SELV contact and is therefore not suitable to control circuits type SELV – Safety Extra Low Voltage, e.g. 24V –);
- different connection and fixing possibilities.

ПРОМЭЛЕКТРОНИКА / sales@prom-elec.com

TABLE 1

	BURNER				OPTIONS			RESET				CONNECTION			
	Single flame	Double flame	Atmospheric without fan	Atmospheric with135 fan	Auxiliary contact (1)	Single electrode	External ignition device	Remote	Inbuilt	Classification according to EN298 (2)	EN298:2003 compliant (3)	Socket P	Socket R	Socket NG	Socket MG
CM191N	*		*					(B)	(A)	AMCLXN	*	*	*	*	
SM191N	*		*		*				(A)	AMCLXN	*			*	
SM192N		*	*					(B)	(A)	AMCLXN	*	*	*	*	
CM381N	*			*				(B)	(A)	FMCLXN	*	*	*		*
CM391N	*			*					(A)	FMCLXN	*			*	
SM152N		*	*					(B)	(A)	AMCLXN	*	*	*	*	
SM592N		*	*				*	(B)	(A)	AMCLXN	*	*	*	*	
MM191N	*		*			*		(B)	(A)	AMCLXN	*	*	*	*	
MM192N		*	*			*		(B)	(A)	AMCLXN	*	*	*	*	

NOTE: (A) Box type xxxxxx.1 – xxxxxx.2
(B) Box type xxxxxx.3 – xxxxxx.4

(1): The auxiliary contact is not type SELV (Safety Extra Low Voltage) and is therefore not suitable to control SELV circuits.
(2): Flame failure during TS causes spark restoration.
(3): Label showing the marking “EN298:2003 compliant” and part reference provided with suffix N.

TECHNICAL DATA

Power supply: 230V~ 50/60Hz
on request: 110/120V~ 50/60Hz
Operating temperature range: -20°C +60°C
Humidity: 95% max at 40°C
Protection degree:
socket NG IP 40 (after installation)
socket P/R IP 00
Times:
– waiting/pre-purge time **(TW)**: 1,5..40 s
TW for type SM152N 3..40 s
– safety time at start-up **(TS)**: 3..60 s
– response time in case of flame failure < 1 s
The times appearing on the product label correspond to guaranteed values. Actual times may differ from declares ones, as waiting and pre-purge time may be longer and safety time shorter than their nominal values.
Power consumption at start-up:
atmospheric burner 10VA
atmospheric fan-assisted burner 12VA
Power consumption during operation:
atmospheric burner 7VA
atmospheric fan-assisted burner 9VA

Max contact rating:	Imax	
- Thermostat:	4A	cosφ ≥ 0.4
- EV1:	0.5A	cosφ ≥ 0.4
- EV2:	0.5A	cosφ ≥ 0.4
- EVG:	0.5A	cosφ ≥ 0.4
- Fan:	1A	cosφ ≥ 0.4
- Lockout signal:	0.5A	cosφ = 1
- Auxiliary contact:	0.5A	cosφ ≥ 0.4
- External ignition device:	1.5A	cosφ ≥ 0.2

Max cable length for external components: 1 m
Internal fuse rating: 5A slow-blow
External fuse rating: 3.15A fast-blow
Flame monitoring:
The flame detection device exploits the rectification property of the flame (ionization); the device is not provided with any protection impedance and is therefore not safe against the risk of electric shock.

- Min ionization current: 0.5µA
on request: 1.2µA
- Recommended ionization current: 3÷5 times the min one
- Max cable length: 1 m
- Min insulation resistance of detection cable and electrode to earth: ≥ 50MΩ
- Max electrode stray capacitance: ≤ 1nF
- Max short-circuit current: < 200µA AC
- Max ionization current (230 V 50 Hz): 8µA DC

Ignition:
- Ignition voltage: 8KV with 30pF load
- Spark repetition rate: 25Hz
- Max cable length: 2m
- Recommended spark gap: 2-4mm
- Power consumption: 2.5VA
- Spark energy: 15mJ

Weight:
with socket P or R: 220g
with socket NG or MG: 275g
Control units for special applications:
Upon request it is possible to meet particular requirements regarding times, spark repetition rate, min ionization current and operating cycle.

CONSTRUCTION

The plastic casing protects the control unit from any damage resulting from impacts, tampering, dust and contact with the external environment.
A particular construction technique, consisting of four PCBs assembled together to form a "box" structure, has enabled to considerably reduce the dimensions of the device.
A varistor protects the control unit from any voltage transients which may arise in the mains supply.
An inbuilt fuse protects the internal relays of the unit in case of short circuit on the control outputs (valves, fan and lockout signal). As this fuse is not accessible, the unit will have to be protected by an external fast-blow fuse suitable to the loads connected and never exceeding 3,15A.

ПРОМЭЛЕКТРОНИКА / sales@prom-elec.com

OVERALL DIMENSIONS

The EUROBOX series burner control units can be provided with a different casing according to the characteristics and fixing systems required.

Casings are available with or without reset push-button and can be equipped with lateral fixing brackets or not. Please note that the units equipped with lateral fixing brackets can be fitted to sockets type "P" or "R" only, as these are provided with suitable fixing hooks. The numeric suffix in the part reference indicates the type of casing:

1 with reset push-button; with fixing brackets
2 with reset push-button; without fixing brackets
3 without reset push-button; with fixing brackets
4 without reset push-button; without fixing brackets

The possibility of using casings without reset push-button is restricted to the control units prearranged for remote reset. Fig.1 shows the overall dimensions of the units.

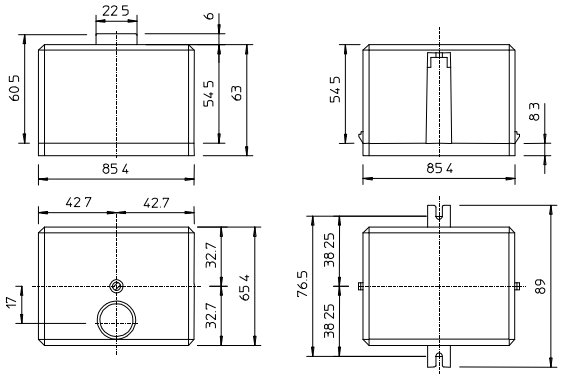

Fig.1

ACCESSORIES

The control units are usually supplied with inbuilt reset push-button; versions with remote reset supplied with a suitable light reset push-button are also available (see Fig.2).

The casings of the control units are prearranged for the use of strain relieves/cable glands to be mounted on their sides; also these accessories can be supplied upon request (see Fig.3).

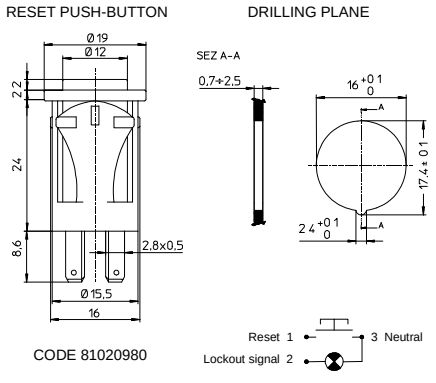

Fig.2

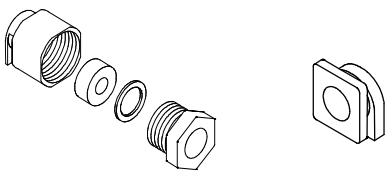

Fig.3

CONNECTION

For this series of burner control units, various interconnection solutions are possible. In fact, different types of connecting sockets can be used (see Fig.4 and Fig.5): types NG (code 18210094) and MG (code 18210113) are equipped with screw terminal board, whereas types P (code 18210096) and R are provided with a number of fast-on holders.

Socket type MG differs from type NG for the availability of an auxiliary terminal requested for the control unit type CM381. Socket type P differs from type R on positions 8 and 10 for the availability of through holes to suit female fast-on terminals of standard type.

As regards the connection of the control units, strain relieves and a sufficient number of earth and neutral terminals should be available in the appliance or in external connection boxes.

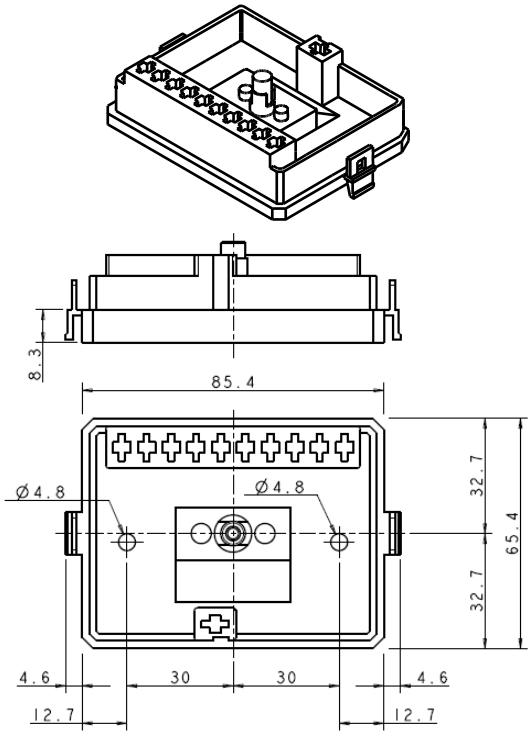

Socket R Fig. 4

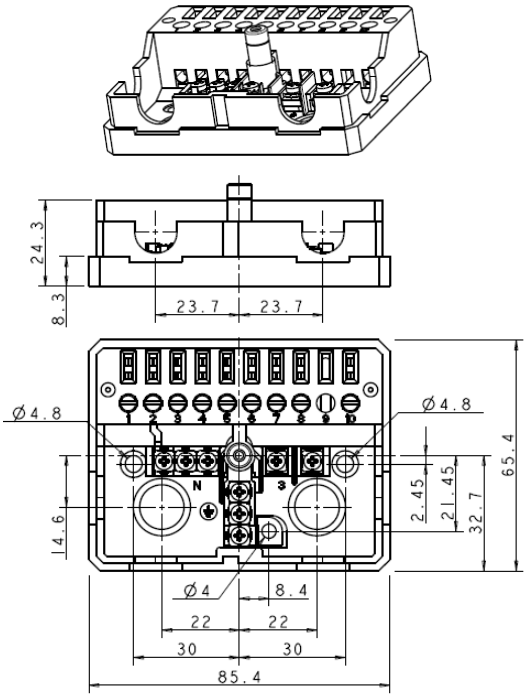

Socket NG Fig. 5

INSTALLATION DIRECTIONS

- A regulation shutdown should occur every 24 hours to enable the unit to check its own efficiency (systems for non-permanent operation).
- Ignition systems are safety devices; the manufacturer's responsibility and guarantee are invalidated in case of Customer's tampering with the product.
- Connect and disconnect the control unit only after switching off the power supply.
- The unit can be mounted in any position.
- Avoid exposure to dripping water.

– A ventilated installation environment and a suitably low temperature ensure the longest life of the control system.
– Before installing or replacing the unit, make sure that the type, code and times are correct.
– The control systems specified as IP00 should be installed in appliances providing adequate protection against the risk of electric shock (at least IP20).

ELECTRICAL INSTALLATION

– Respect the applicable national and European standards regarding electrical safety (e.g. EN 60335-1/EN 50165).
– Connect **live** and **neutral** correctly. The non-observance of **live-neutral** polarity may cause a dangerous situation, as internal and external protection and safety devices may become ineffective in case the connection cables of the thermostats and the valves should lose their insulation. Besides, the non-observance of **live-neutral** polarity causes lockout at the end of the safety time at start-up.
– Before starting the system check the cables carefully. A wrong wiring can damage the unit and compromise the safety of the appliance.
– Make sure that the **earth** terminal of the control system, the metal frame of the burner and the **earth** of the mains supply are well connected.
– Avoid placing the detection cable close to power or ignition cables.
– Use heat resistant detection cables and electrodes, and make sure that they are well insulated to **earth** and protected from possible moisture or water in general.
– Keep the ignition cable as short and straight as possible and place it far from other conductors to reduce the emission of electromagnetic interference (max length <2m and insulation voltage >25kV).

In case of a **live-neutral** network with **unearthed neutral** or a **live-live** network (with **unearthed** star centre), the control unit can operate as well thanks to an inbuilt resistor; however, in these cases we recommend using our step-up transformer type AR1.
In case of bad insulation between **live** and **earth**, the voltage on the ionization probe can be reduced until it causes the lockout of the control unit.

CHECKING AT START-UP

Check the control system before the first start-up, after any overhaul and after a long period of non-operation. Before any ignition attempt make sure that the combustion chamber is free from gas, then check the following:
– if the start-up attempt occurs without gas supply, the control system should go to lockout at the end of the safety time;
– when stopping the gas flow while the control system is running, the power supply to the gas valve(s) should be interrupted within 1s, and the control system should proceed to lockout after a recycling attempt;
– operating times and sequence should correspond to those declared for the type of control unit you are using;
– the level of the flame signal should be high enough (see Fig.6 for the measuring method to adopt);
– the ignition probe should be adjusted in the most stable way for a spark gap between 2-4 mm;
– the intervention of limiters or protection devices should cause a safety shutdown according to the type of application.

OPERATION

At every start-up the control system performs a self-checking of its own efficiency. During the waiting or pre-purge time (TW) the internal circuit tests the correct operation of the flame signal amplifier. Extraneous light or a fault in the amplifier leading to flame simulation prevent the control system from starting.
In the types with fan control, before the beginning of the pre-purge time the air pressure switch contacts are checked to prove their "no-air-flow" condition. If this test is positive, the air pressure switch detects the air flow and consequently switches to "air-flow" position, allowing in this way the pre-purge time to begin.
At the end of the waiting or pre-purge time, the gas valve is energized and the ignition device is operated. In this way the safety time (TS) begins.
If a flame signal is detected during the safety time, the ignition device is disabled and, in some models, the independent auxiliary contact (SM191N) or the main valve control switch from "off" to "flame-on" position.
Else, if no flame signal is detected during the safety time, at the end of the same the control system goes to lockout, the gas valve is closed, the ignition device disabled and the lockout signal energized.
Flame failure during the safety time causes the ignition device to be re-activated within one second.
Please see the attached operating cycle diagrams to better understand the operation of each control unit.

RESETTING THE CONTROL UNIT

In case of lockout, wait at least 10 seconds before trying to reset the unit; if this time is not observed, the system may not reset correctly. In general, the reset push-button should be visible and placed near the appliance. Reset can only occur by an intentional manual operation and not by means of any automatic devices such as thermostats or timers.
In the appliance it is possible to combine the reset push-button with the main switch; in this case, however, a light alarm will have to be installed.

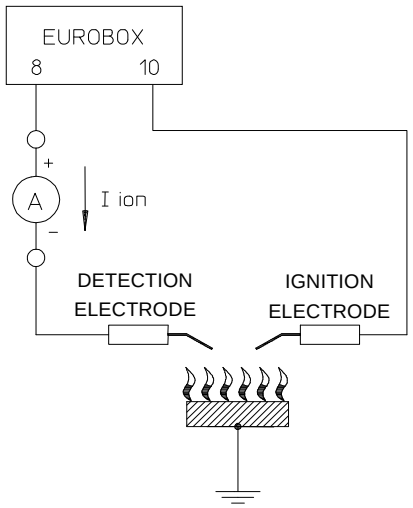

Fig.6

CONNECTION DIAGRAMS

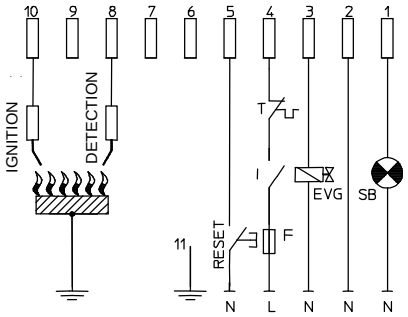

TYPE CM191N

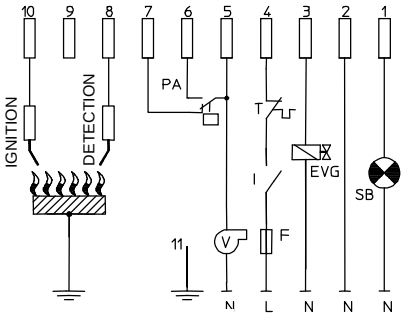

TYPE CM391N

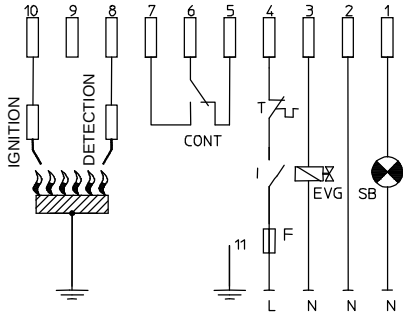

TYPE SM191N

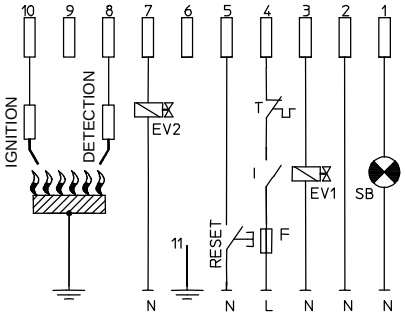

TYPE SM192N SM152N

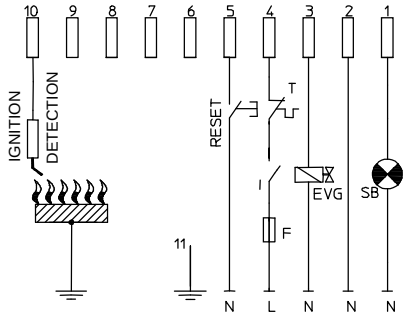

TYPE MM191N

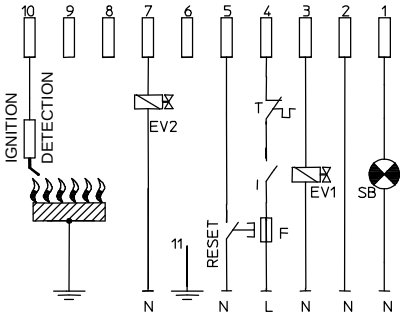

TYPE MM192N

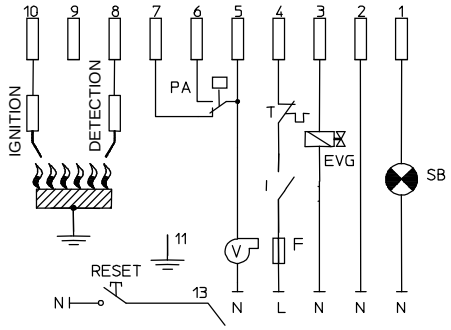

TYPE CM381N

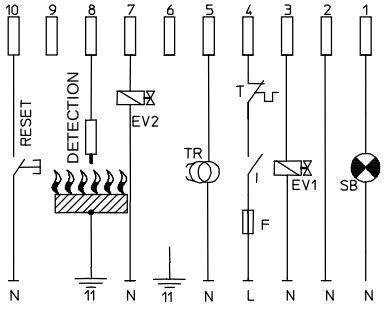

TYPE SM592N

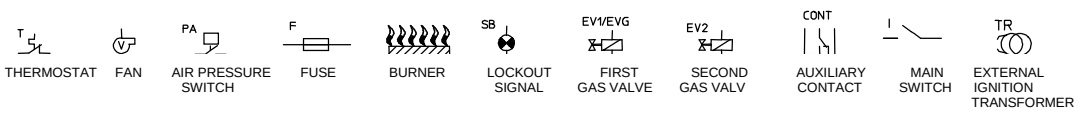

NOTE: Connect the limit thermostat in series to the live.

OPERATING DIAGRAMS

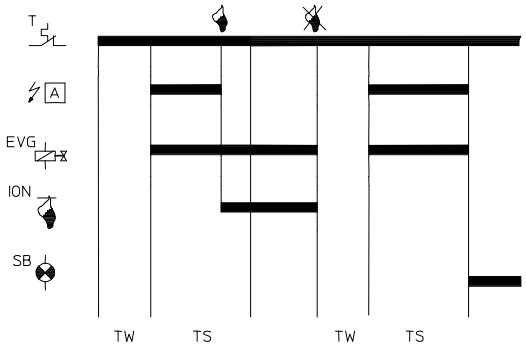

TYPE CM191N – MM191N

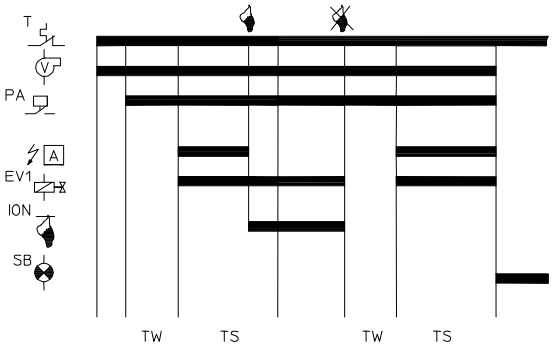

TYPE CM391N – CM381N

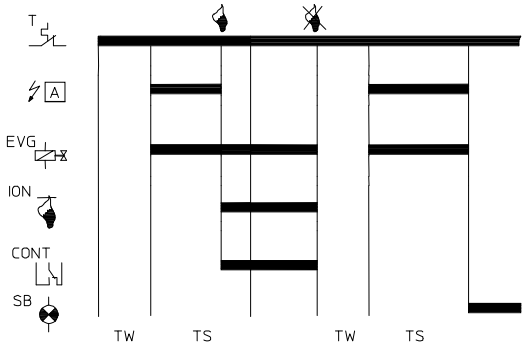

TYPE SM191N

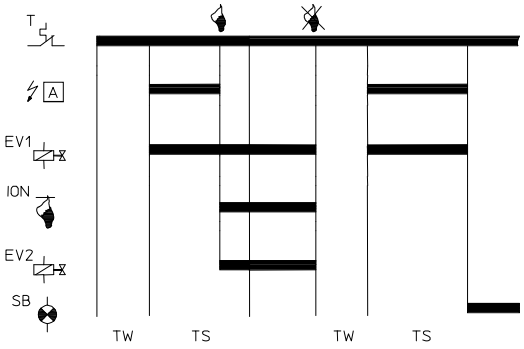

TYPE SM192N – MM192N

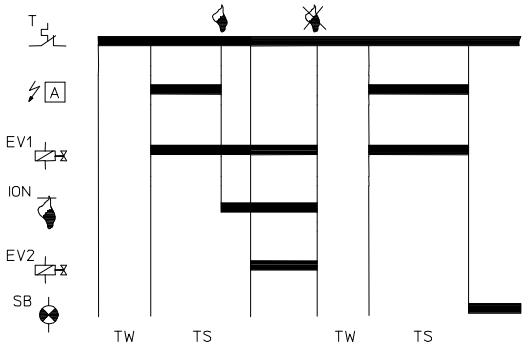

TYPE SM152N

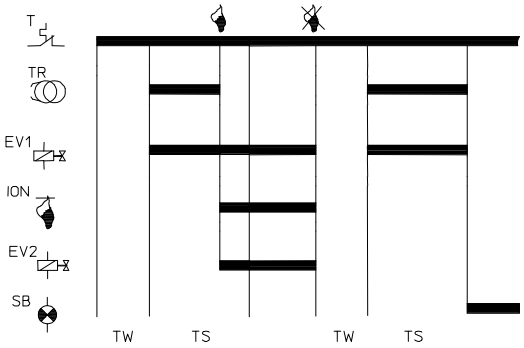

TYPE SM592N



ATTENTION -> Company Brahma S.p.A. takes no responsibility for any damage resulting from Customer's tampering with the device.