satronic
A Honeywell Company

MMI 962.1

Gas burner automatic safety control

For power gas burners
Terminals for air damper motor
Built-in remote reset for lock-outs

Possible flame detectors:
- Ionization probe
- Infrared flicker detector



INTRODUCTION

The gas burner automatic safety control MMI 962.1 controls and monitors blown gas- and combined burners of any nominal thermal load (tested and certified according to EN 298).
If an air damper unit is connected, a 2-stage operation with two fuel valves or a modulating operation with one fuel valve is possible.
Various types and model designations differentiate the automatic safety controls with respect to the programme times, as well as with regard to differing national standards.
The control box type MMI 962.1 Mod. 23 can be used instead of the types MMI 812 Mod. 23 or MMI 812.1 Mod. 23.

CONSTRUCTIONAL FEATURES

The automatic control is housed in a non-inflammable, transparent, plug-in type plastic case and contains:
- Synchronous motor with speed reducer gears as the drive for the switching cam
- Switching cam with informative programme display in colour
- 12 times cam assembly for controlling the programme sequence
- Plug-in type circuit boards with the electronic components

The following important indicating - and operating elements are located on the front panel of the automatic control:
- Illuminated pushbutton for indication of malfunctions and reset
- Programme display in colour
- Screw for central mounting

TECHNICAL DATA

Operating voltage	220 / 240 V (-15... +10%) 50 Hz
Differing frequency	Results in a proportional deviation of the time
Rating fuse	max. 10 A rapid, 6 A slow
Power consumption	10 VA
Max. load per output:	
- term. 3	2A, cos φ 0.2
- term. 4, B	2A, cos φ 0.4
- term. 5, 6, C	1A, cos φ 0.4
total load	5A, cos φ 0.4
Amplifier sensitivity	1 µA
Minimum required Ionization current	5 µA
Flame detector cable	max. 20 m cable length
Air pressure monitor	working contact 4 A, 230 V
Waiting time for malfunction remedy	None
Flame detector	
- Ionization probe	
- Infrared flicker detector	IRD 1020
Weight, incl. base	350 g
Mounting position	any
Insulation standard	IP 44
Admissible ambient temperature for controller and flame detector	-20° C... +60° C
Classified acc. to EN 298	BTLLXN

program timings (sec.)		MMI 962.1
Model		23
Waiting time at start-up	tw	8
Max. reaction time for air proving switch	tlw	15
Pre-purge time	tv1	30
LK open signal	tlk	38
Pre-ignition time	tvz	3
Total ignition time	tz	6.6
Safety time	ts	3
Time delay term.6 / term.C	tv2	8

0708.20-01-e/04/99

ПРОМЭЛЕКТРОНИКА / sales@prom-elec.com

APPLICATION TECHNOLOGY FEATURES

1. Flame Monitoring

The flame monitoring can be effected with the following flame detectors:
- With ionization electrodes in power grids with earthed neutral conductor, utilizable with gas burners (interference effects of the ignition spark cannot influence the formation of the flame signal).
- With infrared flicker detector type IRD 1020 for all types of burners. (siehe Dok. 746)

2. Burner Control

- The burner controls MMI 962.1 features a low-voltage protection. If the supply voltage dropps below 160 V during operation, the burner switches-off. When the supply voltage raises above 180 V, the burner performs a restart independently.
- The automatic burner controls MMI only operates when a load is connected to terminal 5. If the fuel valve is interrupted by an external contact during the pre-purging phase, a resistance of max. 22 kW, 4 Watt has to be applied bet-ween the terminals 5 and 8.
- Functional test of the air pressure monitor before the startup and monitoring of the air pressure during the pre-purging time, as well as in the operating condition of the burner. For normal applications a working contact with a power rating of 4 A / 230 V is sufficient.
- In the case of the automatic control MMI 962.1, contacts can be installed between the terminals 1 and 9 (e.g., valve limit position contacts). These are checked for their correct closing position when the unit is started up. The connection 1-9 has to be closed during the starting phase of the auto-matic control.
- No fuel valve must be connected to terminal 6.

3. Safety

With respect to design and programme sequence, the gas burner automatic safety controls of the MMI 962 type range comply with the currently applicable European standards and regulations.

4. Mounting and Electrical Installation

Wiring base:
- 3 earth terminals with additional terminal for burner earthing
- 3 neutral terminals with internal permanent connection to neutral terminal 8
- 2 independant spare terminals (S1 and S2)
- extra terminals A, B and C are standard
- 2 slide-in plates and 2 easy knock out holes (PG11 thread) plus 2 knock out holes in the base bottom faciliate the base wiring

General:
- Mounting position as required, insulation standard IP 44 (splash-proof). The automatic control and sensor should, however, not be exposed to excessive vibration.
- During mounting and installation, the applicable regulations for installation have to be observed.

Remote reset for lock-outs:
- For the external reset, a temporary switch (push-button switch) has to be wired between terminals A and Mp.
- The terminal A can be broke-off if not used.

COMMISSIONING AND SERVICE/MAINTENANCE

1. Important Remarks
- Before commissioning, the wiring has to be accurately checked. Faulty wiring can damage the unit and endanger the safety of the installation.
- The mains fuse has to be selected so that the limit values indicated under "Technical Specifications" are under no circumstances exceeded. Non-compliance with this regulation can have very serious consequences for the control unit and for the installation in the case of a short-circuit.
- For safety reasons, at least one control shut-down per 24 hours must be assured.
- The control unit must be plugged-in or -out only when the mains supply has been disconnected.
- Automatic burner safety controls are safety devices and must not be opened.

2. Functional Check
During commissioning and after an overhaul of the burner, the following checks have to be carried out:

a) Starting test with closed manual valve and bridged gas monitor contact:
   - The device must go into a fault condition after the safety period has elapsed.

b) Close the manual valve in operating position with the gas monitor contact bridged.
   - The device must go into a fault condition after a flame failure.

c) Air pressure monitor contact interrupted:
   - Device goes into a fault condition.

d) Bridge air pressure monitor contact before starting:
   - Device must not start.

3. Trouble Shooting
Burner does not go into operation, programme indication remains:
- Electrical connection defective.
- Thermostat or gas monitor "OFF".

Burner does not go into operation, programme indication rotates continuously:
- Air pressure monitor defective, respectively, not in starting position. (Working contact must be open).
- Connection term. 1 - term. 9 interrupted
- mains voltage < 180V

The automatic control switches to fault condition shortly after the start of the pre-purge time (line within the blue zone):
- Air pressure monitor contact does not close.
- No load on terminal 5.
- Flame signal.

Automatic control switches to fault condition during the pre-purging (blue zone):
- Air pressure monitor contact open
- Flame signal (stray light)

Automatic control switches to fault condition during the safety time (yellow zone):
- No flame formation (ignition missing, valve does not open, etc.)
- No flame signal or too weak flame signal (flame does not adhere, poor insulation of the flame detector, burner not properly connected to the earth conductor).

Automatic control switches to fault condition during the operating position (red, resp. green zone):
- Flame lift-off
- Air pressure monitor contact opens
- Flame signal too weak.

SCHEMATIC CONNECTION DIAGRAM AND PROCESS DIAGRAM MMI 962.1

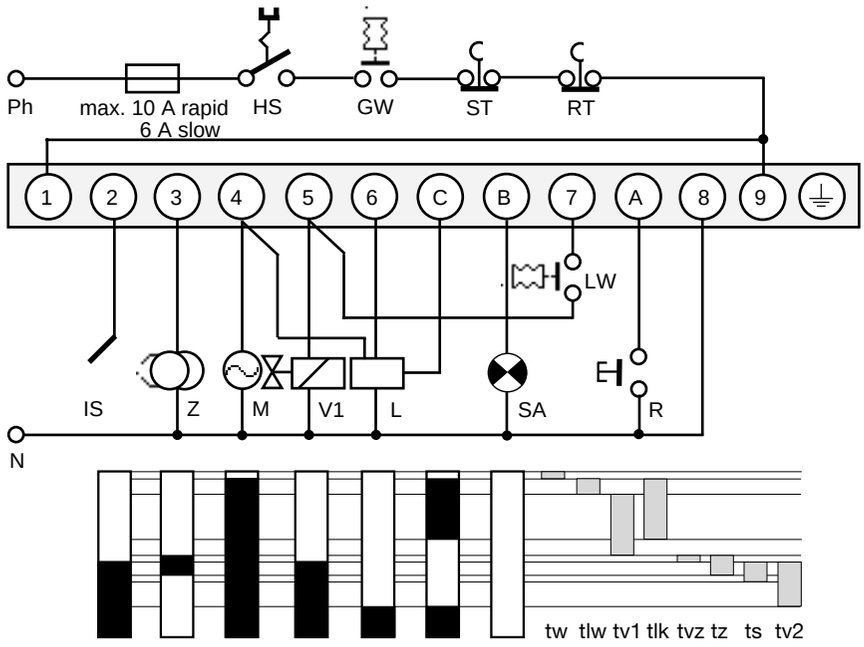

HS	Mains switch
GW	Gas pressure switch
ST	Limit thermostat
RT	Control thermostat
IS	Ionization probe
Z	Ignition
M	Burner motor
V1	Solenoid valve 1st stage
L	Air damper unit
LW	Air pressure monitor
SA	External fault indication
R	Remote reset temporary switch
tw	Waiting time at start-up
tlw	Max. reaction time for air proving switch
tv1	Pre-purge time
tlk	LK open signal
tvz	Pre-ignition time
tz	Total ignition time
ts	Safety time
tv2	Time delay term. 6 / term. C

IRD CONNECTION

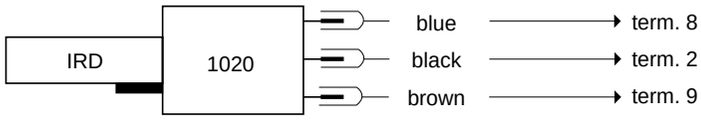

SCHEMATIC DIAGRAM MMI 962.1

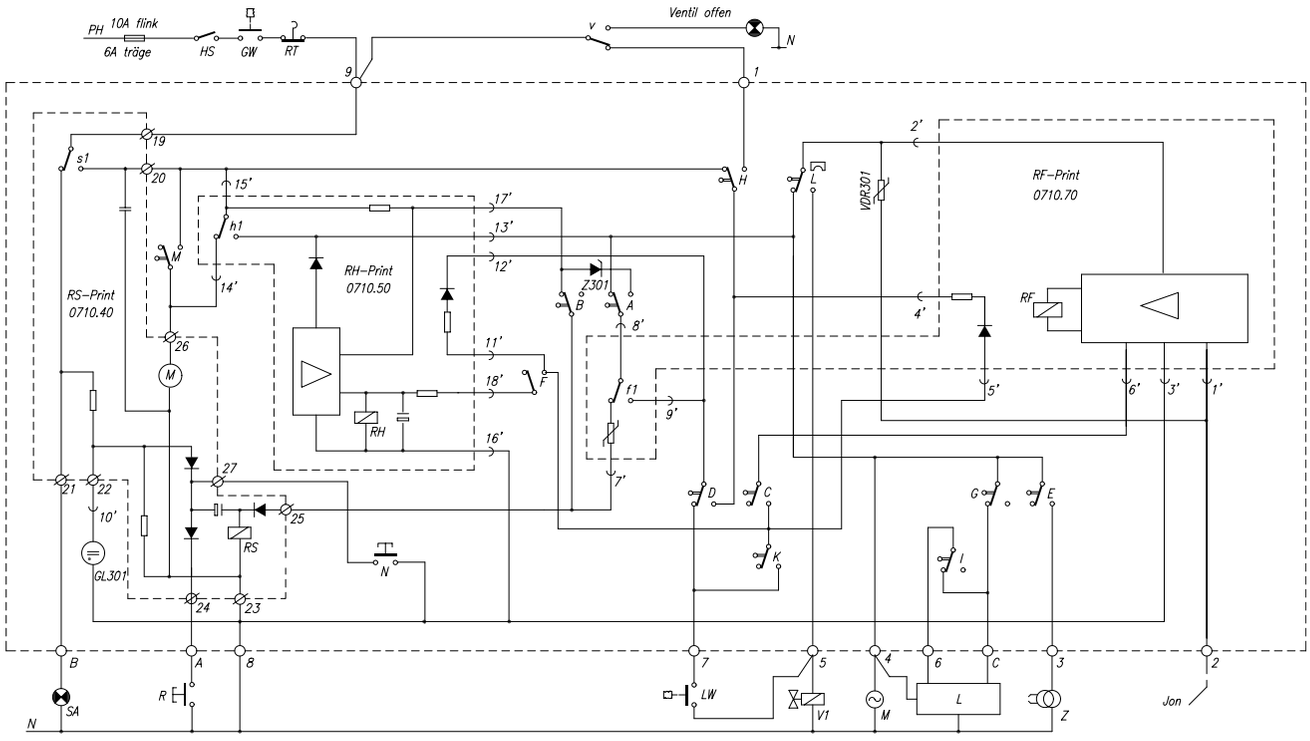

ПРОМЭЛЕКТРОНИКА / sales@prom-elec.com

MMI WITH BASE

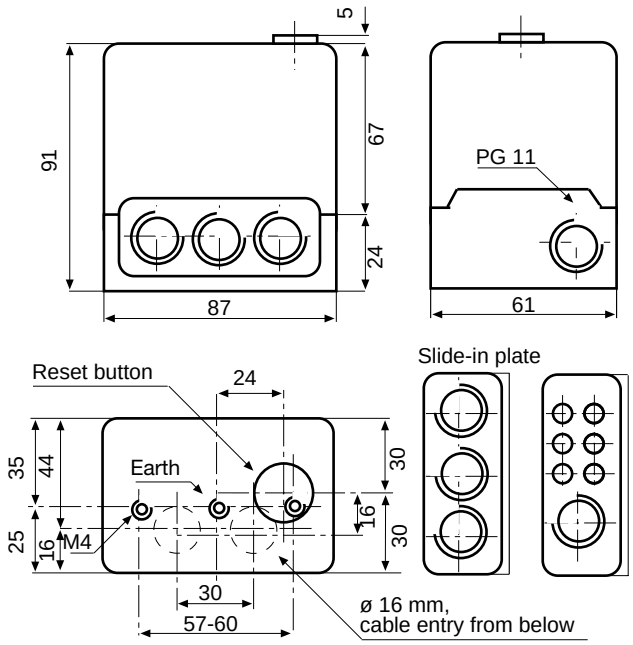

MEASUREMENT OF THE FLAME SIGNAL

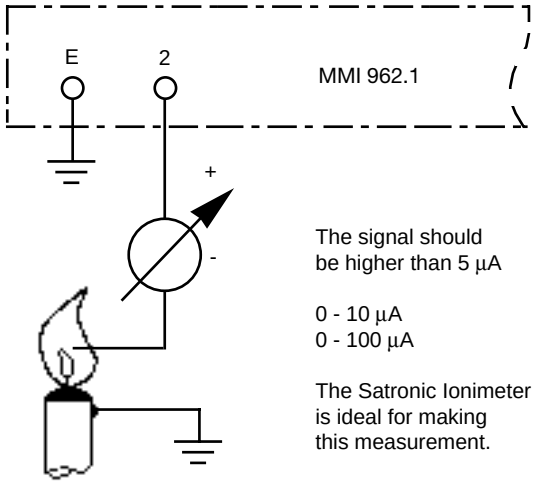

The signal should be higher than 5 µA

0 - 10 µA
0 - 100 µA

The Satronic Ionimeter is ideal for making this measurement.

IRD 1020

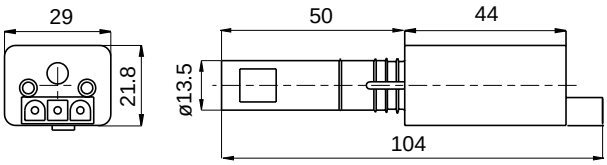

HOLDER M 93

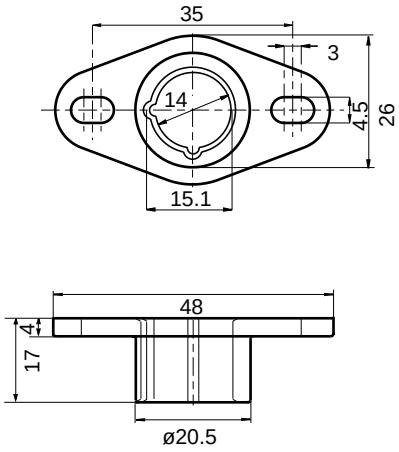

ORDERING INFORMATION

ITEM	DESIGNATION	ITEM NO.
Control unit	Type MMI 962.1 mod. 23	06256
Socket	Wiring base S 98	75310
Multiwire base	Wiring base MW 880 ABC	74001
Slide-in plate	PG-plate	70502
optionally	Cable clamping plate	70501
Flame detector	IRD 1020 end-on viewing	16522
Flame detector	IRD 1020 side-on left	16523
Flame detector	IRD 1020 side-on right	16521
IRD mounting flange	Mounting flange M 93 for IRD 1020	59093
Flame detector cable	3-wire, 0.6 m	7236001

The above ordering information refers to the standard version.
Special versions are also included in our product range.

Specifications subject to change without notice.