

Oil Burner Controls LMO64...

Microcontroller-based oil burner controls for the startup, supervision and control of forced draft oil burners in intermittent operation. Maximum oil throughput up to 30 kg/h.

The LMO64 and this Data Sheet are intended for use by OEMs which integrate the burner controls in their products.

Use, features

Use

The LMO64 burner controls are designed for the startup and supervision of 1-stage forced draft oil burners in intermittent operation. Yellow-burning flames are supervised with photo resistive detectors QRB1 / QRB3 or yellow flame detector QRB4, blue-burning flames with blue flame detector QRC1.

- Applications in accordance with EN 267: Automatic forced draft burners for liquid fuels
- Type-tested and approved in accordance with DIN EN 298

General features

- Undervoltage detection
- Electrical remote reset
- Bridging contact for oil preheater
- Monitoring of time for oil preheater
- Accurate and reproducible program sequence through digital signal handling
- Controlled intermittent operation after 24 hours of continuous operation
- Restart limitation
- Multicolor indication of fault and status messages

Specific features

- Postpurge function for clearing the combustion chamber after burner operation

ПРОМЭЛЕКТРОНИКА / sales@prom-elec.com

Supplementary documentation

Product type	Product name	Type of documentation	Documentation number
LMO	Oil burner control	Environmental declaration	E7130 *)
ACS410	PC software	Software documentation	J7352
OCI400	Optical interface	Data sheet	N7614
QRB1 / QRB3	Photoresistive detector	Data sheet	N7714
QRB4	Yellow-flame detector	Data sheet	N7720
QRC1	Blue-flame detector	Data sheet	N7716

*) On request

Warning notes



To avoid injury to persons, damage to property or the environment, the following warning notes must be observed!

Do not open, interfere with or modify the unit!

- All activities (mounting, installation and service work, etc.) must be performed by qualified staff
- Before making any wiring changes in the connection area, completely isolate the plant from mains supply (all-polar disconnection). Ensure that the plant cannot be inadvertently switched on again and that it is indeed dead. If not observed, there is a risk of electric shock hazard
- Ensure protection against electric shock hazard by providing adequate protection for the burner control's connection terminals. If not observed, there will be a risk of electric shock
- Each time work has been carried out (mounting, installation, service work, etc.), check to ensure that wiring is in an orderly state and make the safety checks as described in «Commissioning notes». If not observed, the safety functions are no longer ensured and there will be a risk of electric shock
- Press the lockout reset button / operation button of the LMO64 or the attached AGK20 lockout reset button extension only manually (applying a force of ≤10 N) without using any tools or pointed objects. If not observed, the safety functions are no longer ensured and there will be a risk of electric shock
- Fall or shock can adversely affect the safety functions. Such units must not be put into operation, even if they do not exhibit any damage. If not observed, the safety functions are no longer ensured and there will be a risk of electric shock
- Risk of damage to the switching contacts!
  If the external primary fuse (Si) is blown due to overload or short-circuit at the terminals, the LMO64 must be replaced.

Mounting notes

Ensure that the relevant national safety regulations are complied with.

Installation notes

- Always run the high-voltage ignition cables separately while observing the greatest possible distances to the unit and to other cables
- Install switches, fuses, earthing, etc., in compliance with local regulations
- Ensure that the maximum permissible current load is not exceeded; refer to chapter ‘Technical data’
- Do not feed external mains voltage to the control outputs of the unit. When testing the functions of the burner components controlled by the LMO64 (fuel valves or similar), the LMO64 must not be connected
- Do not mix up live and neutral conductors



Attention!
To ensure that the LMO64 does not get mixed up with other types of burner controls, it may only be used in connection with the grey AGK11.6 plug-in base. The live conductor for the control thermostat or pressurestat (R) must be tapped after the monitors (W) and safety limiters (SB) and connected to terminal 7; refer to chapter ‘Connection diagram’.

Electrical connection of the flame detector

It is important to achieve practically disturbance- and loss-free signal transmission:

- Never run the detector cable together with other cables
  – Line capacitance reduces the magnitude of the flame signal
  – Use a separate cable
- Observe the permissible detector cable lengths; refer to chapter ‘Technical data’
- Earth the burner in compliance with the relevant regulations; earthing the boiler alone does not suffice

Commissioning notes

When commissioning the plant or when doing maintenance work, make the following safety checks:

	Safety check	Anticipated response
a)	Burner startup with flame detector darkened	Non-alterable lockout at the end of the safety time (TSA)
b)	Burner startup with flame detector ex-posed to extraneous light	Non-alterable lockout within 40 seconds
c)	Burner operation with simulated flame failure; for that purpose, darken the flame detector during operation and maintain that status	Restart followed by the non-volatile lockout at the end of safety time (TSA)

Applied directives:

- Low-voltage directive 2014/35/EC
- Directive for pressure devices 2014/68/EC
- Electromagnetic compatibility EMC (immunity) *) 2014/30/EC

*) The compliance with EMC emission requirements must be checked after the burner control is installed in equipment

Compliance with the regulations of the applied directives is verified by the adherence to the following standards / regulations:

- Automatic burner control systems for burners and appliances burning gaseous or liquid fuels — DIN EN 298
- Safety and control devices for burners and appliances burning gaseous and/or liquid fuels — General requirements — DIN EN 13611
- Automatic electrical controls for household and similar use Part 2-5: Particular requirements for automatic electrical burner control systems — DIN EN 60730-2-5

The relevant valid edition of the standards can be found in the declaration of conformity!

Note on **DIN EN 60335-2-102**
Household and similar electrical appliances - Safety
Part 2-102: Particular requirements for gas, oil and solid-fuel burning appliances having electrical connections. The electrical connections of the LMO64 and the AGK11.6 plug-in base comply with the requirements of EN 60335-2-102.

EAC Conformity mark (Eurasian Conformity mark)

UKCA conformity mark (UK compliance)

China RoHS
Hazardous substances table:
http://www.siemens.com/download?A6V10883536

Life cycle

The LMO64 has a designed lifetime* of 250,000 burner startup cycles which, under normal operating conditions in heating mode, corresponds to approx. 10 years of service (starting from the date of manufacture on the type label). This lifetime is based on the endurance tests specified in standard EN 298. A summary of the conditions has been published by the European Control Manufacturers Association (Afecor) (www.afecor.org).

The designed lifetime is based on use of the LMO64 according to the data sheet. After reaching the designed lifetime in terms of the number of burner cycles, or after the corresponding usage time, the LMO64 must be replaced by authorized personnel.

* The designed lifetime is not the warranty time specified in the Terms of Delivery

Disposal notes

The LMO64 contains electrical and electronic components and must not be disposed of together with domestic waste. Local and currently valid legislation must be observed.

Mechanical design

The housing is made of impact-proof, heat-resistant and flame-retarding plastic. LMO64 and AGK11.6 plug-in bases are silver-grey (RAL7001).The LMO64 is made of black plastic.

The housing accommodates:

- The microcontroller, which controls the program sequence, and the print relays for load control,
- The electronic flame signal amplifier,
- The lockout reset button with its integrated 3-color signal lamp (LED) for operating status and fault status messages and the socket for connecting the OCI400 optical interface or the AGK20 lockout reset button extension

Display and diagnostics

- Multicolor display of status and fault messages
- Operating status messages, fault status messages, and service information are transmitted via a unidirectional interface (UDS) in diagnostic mode. An OCI400 optical interface is used for this purpose and is plugged onto the lockout reset button with integrated LED signal lamp. The OCI400 optical interface then transmits the information to the ACS410 PC software or to flue gas analyzers from various manufacturers

Type summary

Article no.	Type reference	Mains voltage	Fuel valve stages	Burner capacity	[1])	Remote reset	Times					
							tw max.	t1 / t1' min.	TSA max.	t3 min.	t3n max.	t8 max.
BPZ:LMO64.300C2	LMO64.300C2	AC 230 V	1	<30 kg/h	•	•	2.5 s	15 / 16 s	10 s	15 s	10 s	20 s
BPZ:LMO64.301C2	LMO64.301C2	AC 230 V	1	<30 kg/h	•	•	2.5 s	15 / 16 s	10 s	15 s	10 s	90 s
BPZ:LMO64.302C2 *	LMO64.302C2 *	AC 230 V	1	<30 kg/h	•	•	2.5 s	15 / 16 s	10 s	15 s	3 s	20 s

* On request only!

Legend

TSA	Ignition safety time
tw	Waiting time
t1	Prepurge time
t1'	Purge time
t3	Preignition time
t3n	Postignition time
t8	Postpurge time
[1])	Bridging contact for oil preheater

Accessories (to be ordered separately)

Connection accessories for small burner controls

Plug-in base **AGK11.6**
Article no.: **BPZ:AGK11.6**
Plug-in base grey for connecting the LMO64 to burner plant.
Refer to Data Sheet N7201.



Cable holders **AGK66**
Article no.: **BPZ:AGK66**
For plug-in base AGK11.6.
Refer to Data Sheet N7201.



Cable gland holder **AGK65**
Article no.: **BPZ:AGK65**
- Cable gland holder for AGK11.6 plug-in base
- Pg11

Refer to Data Sheet N7201.



Cable gland holder **AGK65.1**
Article no.: **BPZ:AGK65.1**
- Cable gland holder for AGK11.6 plug-in base
- M16 x 1.5

Refer to Data Sheet N7201.



Cable strain relief elements **AGK67**
Article no.: **BPZ:AGK67**
For plug-in base AGK11.6.
Refer to Data Sheet N7201.



Accessories (to be ordered separately)

Flame detectors

Photo resistive detectors **QRB1** (for replacement units only)
Refer to Data Sheet N7714.



Photo resistive detectors **QRB3**
Refer to Data Sheet N7714.



Yellow flame detector **QRB4**
Refer to Data Sheet N7720.



Blue-flame detectors **QRC1**
Refer to Data Sheet N7716.

Frontal illumination



Lateral illumination



Service-Tools

Optical Interface **OCI400**
Article no.: **BPZ:OCI400**

- Optical interface between burner control and PC
- Facilitates viewing and recording setting parameters on site in connection with the ACS410 PC software

Refer to Data Sheet N7614.



PC software **ACS410**
Article no.: **BPZ:ACS410**
PC software for setting the parameters and for visualizing the burner controls.
Refer to Software Documentation J7352.

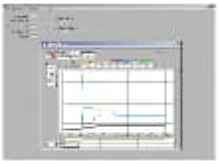

Others

AGK20 lockout reset button extension
Refer to chapter ‘Dimensions’.



Technical data

General unit data

Mains voltage	AC 230 V +10 % / -15 %
Mains frequency	50...60 Hz ±6 %
External primary fuse (Si)	6.3 A (slow)



Caution!
Risk of damage to the switching contacts!
If the external primary fuse (Si) is blown due to overload or short-circuit at the terminals, the LMO64 must be replaced.

Power consumption	12 VA
Perm. mounting position	Optional
Weight	Approx. 200 g
Dimensions	Refer to chapter *Dimensions*
Safety class	I (burner control with plug-in base)
Degree of protection	IP40 (to be ensured through mounting)



Note
The burner or boiler manufacturer must ensure degree of protection IP40 through adequate installation of the LMO64.

Creepage distances and air gaps	• Overvoltage category III • Rated surge voltage 4 kV at 230 V AC • Pollution degree 2 • Up to 2,000 m above sea level
Perm. cable lengths From terminal 7 to control thermostat or pressurestat «R»	Max. 3 m at a line capacitance of 100 pF/m Max. 20 m at 100 pF/m
Cable lengths	
• QRB1/QRB3 photoresistive detector	Max. 10 m at 100 pF/m (laid separately)
• QRB4 yellow-flame detector	Max. 3 m at 100 pF/m (laid separately)
• QRC1 blue-flame detector	Max. 10 m at 100 pF/m (laid separately)
Remote reset laid separately	Max. 20 m

Perm. amperage at cos φ ≥ 0.6	**LMO64**
Terminal 1	Max. 5 A
Terminals 3 and 8	Max. 3 A
Terminals 4, 5, 6 and 10	Max. 1 A

Technical data (cont´d)

Environmental conditions	**Storage**	EN 60721-3-1:1997
	Climatic conditions	Class 1K3
	Mechanical conditions	Class 1M2
	Temperature range	-20...+60 °C
	Humidity	<95 % r.h.
	Transport	EN 60721-3-2:1997
	Climatic conditions	Class 2K2
	Mechanical conditions	Class 2M2
	Temperature range	-20...+60 °C
	Humidity	<95 % r.h.
	Operation	EN 60721-3-3:1995+A2:1997
	Climatic conditions	Class 3K3
	Mechanical conditions	Class 3M3
	Temperature range	-5...+60 °C
	Humidity	<95 % r.h.
	Installation altitude	Max. 2,000 m above sea level



Attention!
Condensation, formation of ice and ingress of water are not permitted!
If not observed, the safety functions are no longer ensured and there will be a risk of electric shock.

Flame supervision with QRB1/QRB3 photoresistive detector, QRB4 yellow-flame detector, and QRC1 blue-flame detector

	Required detector current (with flame)	Perm. detector current (without flame)	Possible detector current with flame (typically)
QRB1 ¹)	Min. 45 µA	Max. 5,5 µA	100 µA
QRB3 ¹)	Min. 45 µA	Max. 5,5 µA	100 µA
QRB4 ¹)	Min. 45 µA	Max. 5,5 µA	70 µA
QRC1 ¹)	Min. 45 µA	Max. 5,5 µA	70 µA

¹) The values given in the table above only apply under the following conditions:
- Mains voltage depending on execution AC 230 V
- Ambient temperature 23 °C

Green signal lamp (LED) for indication of operating state

	Detector current in operation: • Flame signal instable • Green signal lamp (LED) flashing	Detector current in operation: • Flame signal stable • Green signal lamp (LED) steady on
QRB1 ¹)	<45 µA	>45 µA
QRB3 ¹)	<45 µA	>45 µA
QRB4 ¹)	<45 µA	>45 µA
QRC1 ¹)	<45 µA	>45 µA

¹) The values given in the table above only apply under the following conditions:
- Mains voltage depending on execution AC 230 V
- Ambient temperature 23 °C

Measurement circuit for detector current

QRB1 / QRB3 / QRB4

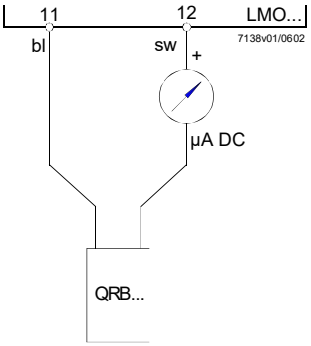

QRC1

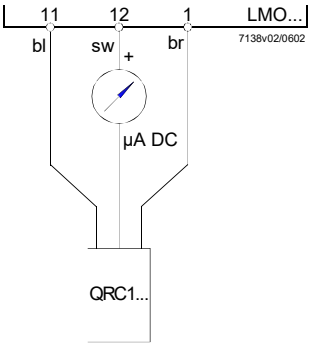

Legend

µA DC	DC microammeter with an internal resistance of Ri = max. 5 kΩ
bl	Blue
sw	Black
br	Brown

As an alternative to detector current measurement, the OCI400 optical interface with ACS410 PC software can be used. In that case, connection of the DC microammeter is not required.

☞ Note!
Connection of the cables for the QRB4 yellow-flame detector
Blue cable from the QRB4 yellow-flame detector to terminal 11. Black cable from the QRB4 yellow-flame detector to terminal 12. Otherwise, the QRB4 yellow-flame detector will not function.

Function

Preconditions for startup

- The LMO64 is reset
- Reset button «EK1» or «EK2» not used
- All contacts in the line are closed, heat demand
- No undervoltage
- Flame detector is darkened and there is no extraneous light

Undervoltage

- Safety shutdown from the operating position takes place should mains voltage drop below about AC 165 V (with U_N = AC 230 V)
- Restart is initiated when mains voltage exceeds about AC 175 V (with U_N = AC 230 V)

Time supervision oil preheater

If the oil preheater's release contact does not close within 10 minutes, a non-alterable lockout takes place.

Controlled intermittent operation

After no more than 24 hours of continuous operation, the LMO64 initiates an automatic controlled shutdown followed by a restart.

Control sequence in the event of fault

If a non-alterable lockout occurs, the outputs for the fuel valves, the burner motor and the ignition equipment are always immediately deactivated (<1 second). In the event of a non-volatile lockout, the LMO64 remains locked and the signal lamp (LED) lights up red permanently. The LMO64 can then be reset immediately. This status is also maintained in the case of a mains failure.

Cause	Response
Mains failure	Restart
Voltage below undervoltage threshold	Safety shutdown, followed by restart
Extraneous light during prepurge time (t1), 5 s before fuel valve (BV1) release	Non-alterable lockout at the end of the prepurge time (t1)
Extraneous light during «tw»	Start prevention, a non-alterable lockout occurs after a maximum of 40 seconds
No flame at the end of safety time (TSA)	Non-volatile lockout at the end of the safety time (TSA), flash code 2; refer to chapter 'Program sequence'
Flame is lost during operation	Maximum of 3 restarts, then a non-volatile lockout occurs
Oil preheater's release contact does not close within 10 min.	Non-alterable lockout

Resetting the LMO64

After a non-alterable lockout, a reset can be carried out immediately. To do this, press the lockout reset button for about 1 second (<3 seconds). The LMO64 can only be reset when all contacts in the line are closed and when there is no undervoltage.

Ignition program with LMO64.302xx

If the flame is lost during the safety time (TSA), the burner will be reignited before the end of the safety time (TSA) at the latest. This means that several ignition attempts can be made within the safety time (TSA); refer to chapter 'Program sequence'.

Restart limitation

If the flame is lost during operation, a maximum of 3 restarts can be performed. Each time the flame is lost during operation, a non-volatile lockout will be initiated. The restart counter is restarted each time a controlled startup by the control thermostat or pressurestat (R) takes place.

Postpurging

Postpurging is only possible when the oil preheater contact is closed or when the wire link between terminals 3 and 8 is fitted. A demand for heat via «R» during postpurge time «t8», implicates an interruption of postpurging, followed by new start.

Operation, display, diagnostics

Operation

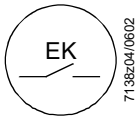

Lockout reset button «EK» is the key operating element for resetting the burner control and for activating / deactivating the diagnostic functions.

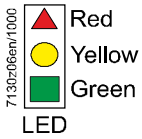

The multicolor signal lamp (LED) in the lockout reset button is the key indicating element for visual diagnostics and interface diagnostics.

Both elements (EK / LED) are located under the transparent cover of the lockout reset button.

There are 2 diagnostic choices available:
1. Visual diagnostics: Operating state indication or diagnostics of the cause of fault
2. Interface diagnostics: Using the OCI400 optical interface and the ACS410 PC software, or flue gas analyzers from various manufacturers

Visual diagnostics:
In normal operation, the different operating states are indicated in the form of color codes according to the color code table.

Operating state indication

During startup, indication of the operating state takes place according to the following table:

Color code table for multicolor «LED» signal lamp

State	Color code	Color
Waiting time «tw», standby on continuous phase, waiting status	○	Off
Oil preheater heats	●	Yellow
Ignition phase, ignition controlled	○●○●○●○●○●○	Flashing yellow
Operation, flame o.k.	■	Green
Operation, flame not o.k. (when detector current drops below the recommended level for reliable operation)	○■○■○■○■○■○	Flashing green
Extraneous light on burner startup	■▲■▲■▲■▲■▲■	Green-red
Undervoltage	●▲●▲●▲●▲●▲●▲	Yellow-red
Fault, alarm	▲	Red
Fault code output; refer to ‘Fault code table’	○▲○▲○▲○▲○▲○	Flashing red
Interface diagnostics	▲▲▲▲▲▲▲▲▲▲▲	Red flicker light

Legend

.....	Steady on	▲	Red
○	Off	●	Yellow
		■	Green

Diagnostics of cause of fault

After a non-volatile lockout, the signal lamp (LED) lights up red. In that condition, the visual diagnostics of the cause of fault according to the error code table can be activated by pressing the lockout reset button for more than 3 seconds. Pressing the reset button again for at least 3 seconds, the interface diagnostics will be activated. Interface diagnostics works only if the AGK20 lockout reset button extension is not fitted. If the interface diagnostics have been activated by accident in the operating position – in which case the signal lamp (LED) flickers with a dim red light – they can be deactivated by pressing the lockout reset button again for more than 3 seconds. The moment of switching over is indicated by a yellow light pulse.

The following sequence activates the diagnostics of the cause of fault:

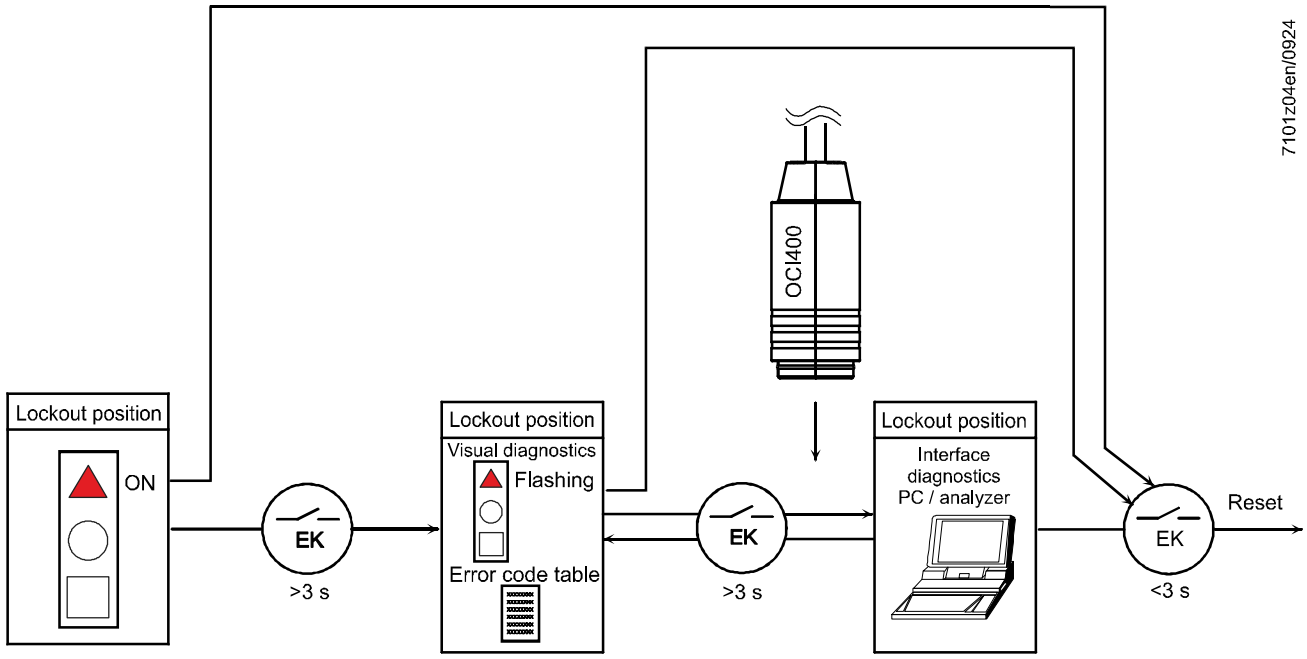

Error code table of multicolor signal lamp (LED)

Blink code red of signal lamp (LED)	Alarm at terminal 10	Possible cause
2 blinks	On	No establishment of flame at the end of «TSA» • Faulty or soiled fuel valves • Faulty or soiled flame detector • Poor adjustment of burner, no fuel • Faulty ignition equipment
3 blinks	On	Free
4 blinks	On	Extraneous light on burner startup
5 blinks	On	Free
6 blinks	On	Free
7 blinks	On	Too many losses of flame during operation (restart limitation) • Faulty or soiled fuel valves • Faulty or soiled flame detector • Poor adjustment of burner
8 blinks	On	Timer supervision oil preheater
9 blinks	On	Free
10 blinks	Off	Wiring fault or internal fault, output contacts, faults that cannot be detected, such as simultaneous faults, other faults

During the time the cause of fault is diagnosed, the control outputs are deactivated
- Burner remains shut down
- the external fault indicator remains de-energized
- Fault status signal (Alarm) at terminal 10, according to the error code table

The diagnostics of the cause of fault is quit and the burner switched on again by resetting the burner control. Press lockout reset button for about 1 second (<3 seconds).

ПРОМЭЛЕКТРОНИКА / sales@prom-elec.com

Connection diagram and internal diagram

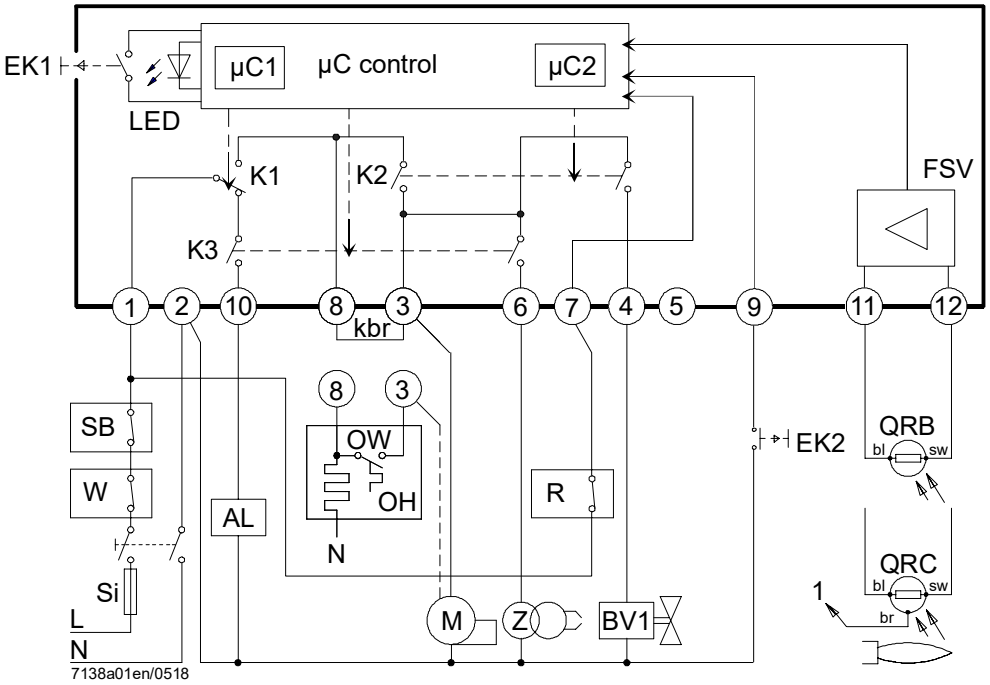

Caution!
Risk of damage to the switching contacts!
If the external primary fuse (Si) is blown due to overload or short-circuit at the terminals, the LMO64 must be replaced.

Control sequence

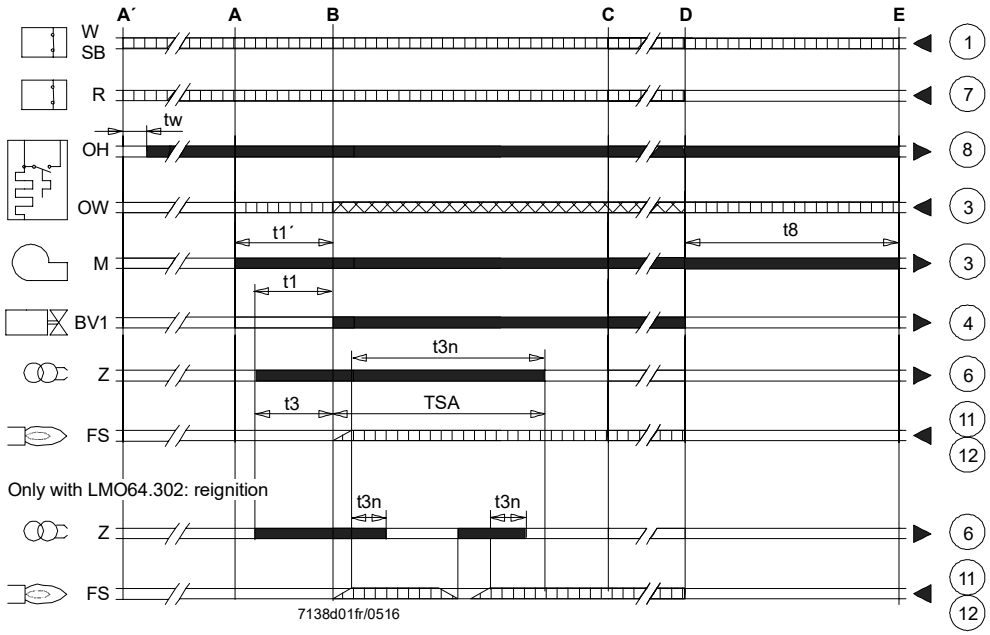

Legend

AL	Alarm device
BVx	Fuel valve
EK1	Lockout reset button
EK2	Remote lockout reset button
FS	Flame signal
FSV	Flame signal amplifier
Kx	Contacts of control relay
kbr	Cable link (required only when oil preheater is not used)
LED	3-color signal lamps
M	Burner motor
OW	Release contact of oil preheater
OH	Oil preheater
QRB1	Photo resistive detector
QRB3	Photo resistive detector
QRB4	Yellow flame detector
QRC1	Blue-flame detector
	bl = blue, br = brown, sw = black
R	Control thermostat or pressurestat
SB	Safety limit thermostat
Si	External primary fuse
W	Limit thermostat or pressure switch
Z	Ignition transformer

TSA	Ignition safety time
tw	Waiting time
t1	Prepurge time
t1’	Purge time
t3	Preignition time
t3n	Postignition time
t8	Postpurge time

A’	Beginning of startup sequence with burners using «OH»
A	Beginning of startup sequence with burners using no «OH»
B	Time of flame establishment
C	Operating position
D	Controlled shutdown by «R»
E	End of startup sequence

	Input/output signal 1 (ON)
	Input/output signal 0 (OFF)
	Input permissible signal 1 (ON) or 0 (OFF)

µC1	Mikrocontroller 1
µC2	Mikrocontroller 2

Dimensions

Dimensions in mm

LMO64



Plug-in base AGK11.6

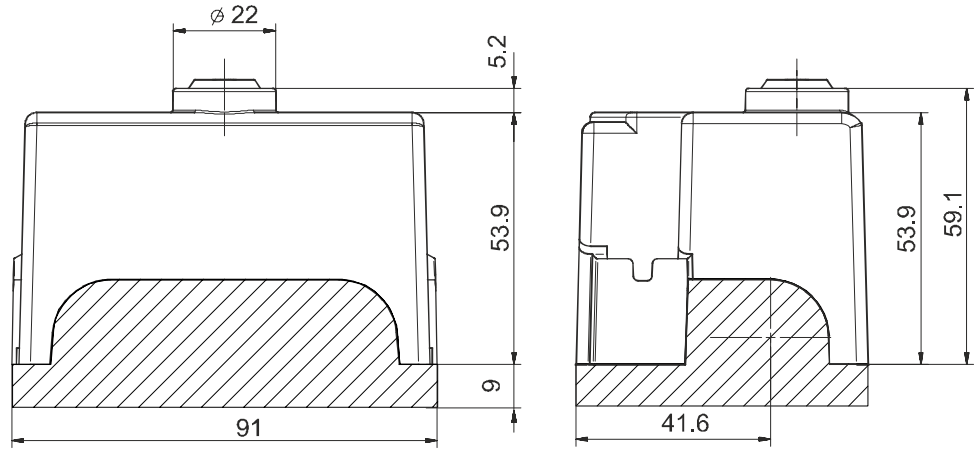

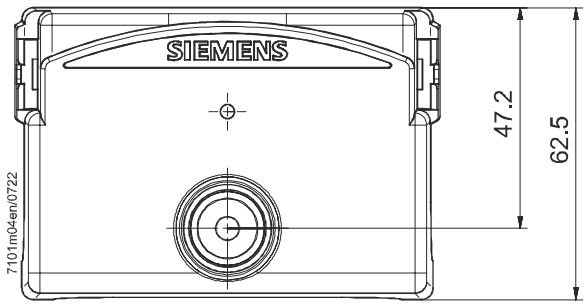

LMO64 with AGK20 lockout reset button extension

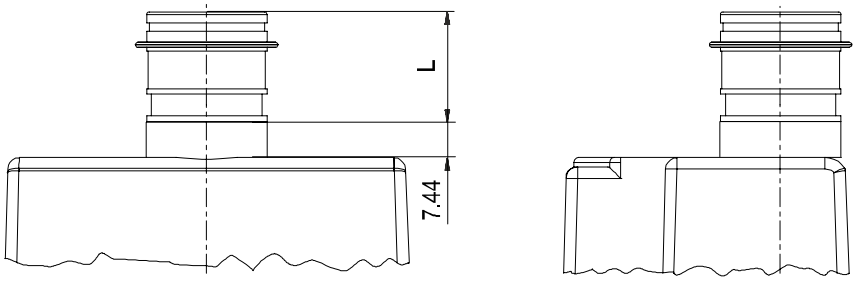

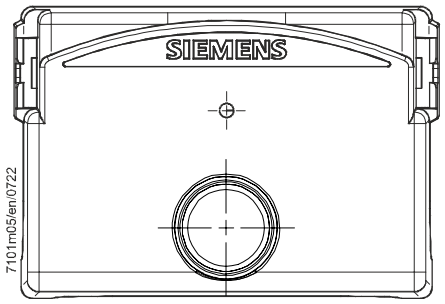

Type (ASN)	Length (L) in mm
AGK20.19	19
AGK20.43	43
AGK20.55	55

© 2025 Siemens AG Smart Infrastructure, Berliner Ring 23, D-76437 Rastatt
Subject to change!