SIEMENS

7547



Example: LMV26.300A2

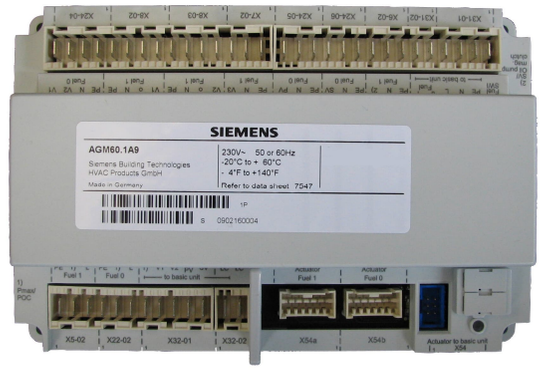

AGM60.1A9

Basic unit for intermittent operation, with integrated fuel-air ratio control for forced draft burners — LMV26.300A2

Basic unit for continuous operation and intermittent operation, with integrated fuel-air ratio control for forced draft burners — LMV36.300A2

Switch unit for switching the valve control or feedback signals of both fuels — AGM60.1A9

The LMV26 / LMV36 burner management system with AGM60 is a microprocessor-based burner control with matching system components for control and supervision of forced draft burners of medium to high capacity.

For using of dual fuel with 2 fuel actuators, AGM60 dual fuel switch unit is required.

The LMV26 / LMV36 / AGM60 and this Data Sheet are intended for use by OEMs which integrate the actuators in their products!

CC1N7547en
21.05.2021

Smart Infrastructure

ПРОМЭЛЕКТРОНИКА / sales@prom-elec.com

Use

Microprocessor-controlled LMV26/LMV36 for single-fuel burners of any capacity for intermittent operation, with electronic fuel-air ratio control, up to 2 actuators, integrated gas valve proving, and VSD control.

The system components (AZL2 and actuators) are connected directly to the LMV26 / LMV36. All safety-related digital inputs and outputs of the LMV26 / LMV36 are supervised by a contact feedback network.

The AGM60 dual fuel switch unit connected to the LMV26 / LMV36 is used for switching the fuel valve control and the feedback signals of both fuel actuators.

- Type-tested and approved in accordance with DIN EN 298
- Applications in accordance with EN 676: Automatic forced draft burners for gaseous fuels
- Applications in accordance with EN 267: Forced draft burners for liquid fuels

For Europe

LMV26 / LMV36:
For intermittent operation in connection with the LMV26 / LMV36 / AGM60, the ionization probe or the QRA, QRB or QRC optical flame detector can be used.

LMV36:
Continuous operation is only possible when using an ionization probe and without an AGM60.

Features

The following items are integrated into the LMV26 / LMV36:

- Burner control complete with valve proving system
- Electronic fuel / air ratio control system for a maximum of 2 actuators SQM3 or SQN1
- Control of VSD for air fan
- Modbus interface
- BCI for connection a display or PC
- Unit parameter adjustable either via display or PC software ACS410

Notes



Warning!
All safety, warning and technical notes given in the Basic Documentation of the LMV26 / LMV36 (P7547) also apply to this document!

Applied directives:

- Low-voltage directive 2014/35/EC
- Directive for pressure devices 2014/68/EU
- Gas Appliances Regulation (EU) (EU) 2016/426
- Electromagnetic compatibility EMC (immunity) *) 2014/30/EC

*) The compliance with EMC emission requirements must be checked after the burner management system is installed in equipment

Compliance with the regulations of the applied directives is verified by the adherence to the following standards / regulations:

- Automatic burner control systems for burners and appliances burning gaseous or liquid fuels — DIN EN 298
- Safety and control devices for gas burners and gas burning appliances - Valve proving systems for automatic shut-off valves — DIN EN 1643
- Gas/air ratio controls for gas burners and gas burning appliances - Part 2: Electronic types — DIN EN 12067-2
- Safety and control devices for burners and appliances burning gaseous and/or liquid fuels — General requirements — DIN EN 13611
- Safety and control devices for gas burners and gas-burning appliances - Particular requirements
  Part 1: Automatic and semi-automatic valves — ISO 23552-1
- Automatic electrical controls for household and similar use
  Part 2-5:
  Particular requirements for automatic electrical burner control systems — DIN EN 60730-2-5

The relevant valid edition of the standards can be found in the declaration of conformity!

Note on **EN 60335-2-102**
Household and similar electrical appliances – Safety
Part 2-102:
Particular requirements for gas, oil and solid-fuel burning appliances having electrical connections. The electrical connections of the LMV26 / LMV36 and the AGM60 comply with the requirements of EN 60335-2-102.

EAC Conformity mark (Eurasian Conformity mark)

ISO 9001:2015
ISO 14001:2015
OHSAS 18001:2007

China RoHS
Hazardous substances table:
http://www.siemens.com/download?A6V10883536

Life cycle

LMV26 / LMV36	The burner management system has a designed lifetime* of 250,000 burner startup cycles which, under normal operating conditions in heating mode, correspond to approx. 10 years of usage (starting from the production date given on the type field).
AGM60	The AGM60 dual fuel switch unit has a designed lifetime* of 5,000 fuel switches, which – under normal operating conditions in heating mode – corresponds to approx. 10 years of service (starting from the date of manufacture on the type label).
General	This lifetime is based on the endurance tests specified in standard DIN EN 298. A summary of the conditions has been published by the European Control Manufacturers Association (Afecor) (www.afecor.org).
	The designed lifetime is based on use of the LMV26 / LMV36 / AGM60 according to the manufacturer's Data Sheet and Basic Documentation. When reaching the designed lifetime in terms of the number of burner startup cycles or time of usage, the LMV26 / LMV36 / AGM60 must be replaced by authorized personnel.
	* The designed lifetime is not the warranty time specified in the Terms of Delivery

Supplementary documentation

User Documentation Modbus AZL2	A7541
Environmental Product Declaration LMV2 / LMV3	E7541 *)
Environmental Product Declaration AGM60	E7547 *)
Installation and Operating Instructions PC Software ACS410	J7352
Basic Documentation LMV26 / LMV36 / AGM60	P7547
Product Range Overview LMV2 / LMV3	Q7541

*) On request

Operating mode	LMV26	LMV26 + AGM60	LMV36	LMV36 + AGM60
Continuous operation	---	---	• GAS only • Ionization only	---
Intermittent operation	• GAS or OIL • All sensors	• GAS and OIL • GAS and GAS • All sensors	• GAS or OIL • All sensors	• GAS and OIL • GAS and GAS • All sensors

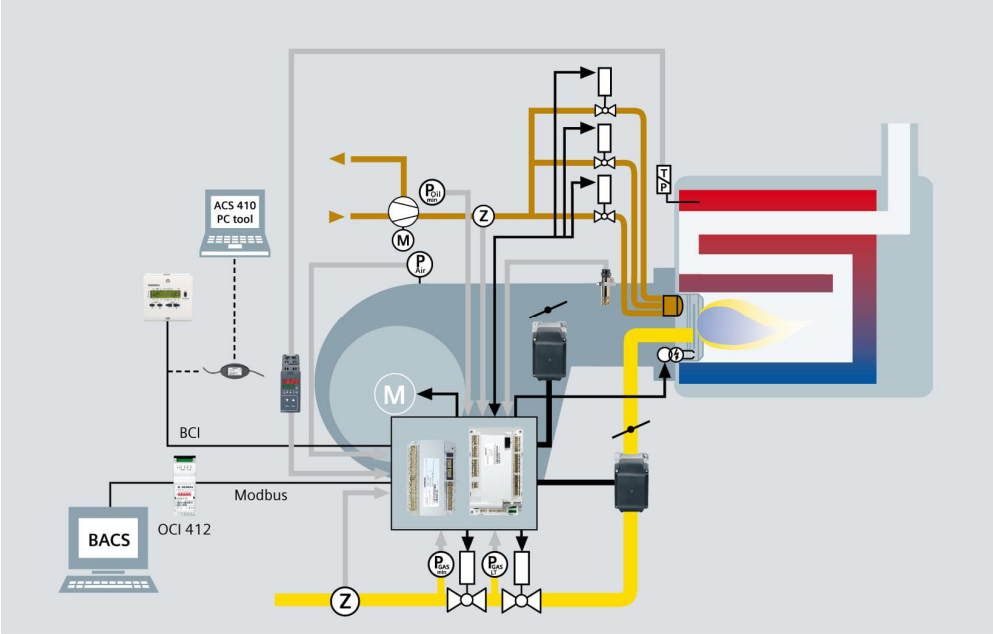

The diagram shows the full scope of functions of the LMV26 / LMV36. The actual functions are to be determined based on the respective execution / configuration!

Ordering

Burner control

LMV26 / LMV36
The basic unit is the actual burner control featuring all-polar input / output terminals. No operating elements. Operation via detached ancillary units for wire-bound communication.
See Basic Documentation P7547.



Article no.	Type	Mains voltage	Parameter set	Detectors
BPZ:LMV26.300A2	**LMV26.300A2**	AC 230 V	Europe	QRA2 / QRA4 / QRA10 / QRB / QRC / ION
S55402-C201-A100	**LMV36.300A2**	AC 230 V	Europe	QRA2 / QRA4 / QRA10 / QRB / QRC / ION

Dual fuel switch unit

AGM60.1A9
Connected to LMV26/LMV36.
Used for switching the valve control or feedback signals and actuators of both fuels.
See Basic Documentation P7547.



Article no.	Type	Mains voltage
BPZ:AGM60.1A9	**AGM60.1A9**	AC 230 V

Fuel selector

The fuel selector is **not** a component of the AGM60 and does **not** constitute part of the scope of delivery.

Service tools

OCI410 interface between burner management system and PC
Article no.: **BPZ:OCI410**
Facilitates viewing, handling and recording setting parameters on site with the help of the ACS410 software package.
See Data Sheet N7616.



OCI412.10 Modbus interface
Article no.: **BPZ:OCI412.10**
Device serving as an interface between the LMV26 / LMV36 and a Modbus system, such as a building automation and control system (BACS). The Modbus interface is based on the RS-485 standard.
See Data Sheet N7615.



ACS410 PC software
Article no.: **BPZ:ACS410**
PC software for parameterization and visualization to the burner management system.
See Software Documentation J7352.

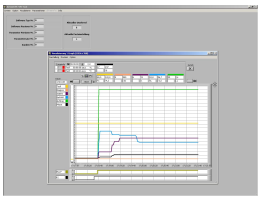

Display and operating units

AZL21.00A9
Article no.: **BPZ:AZL21.00A9**
Detached display and operating unit, choice of mounting methods, 8-digit LCD, 5 buttons, BCI for LMV26 / LMV36, degree of protection IP40.
See Data Sheet N7542.



AZL23.00A9
Article no.: **BPZ:AZL23.00A9**
Detached display and operating unit, choice of mounting methods, 8-digit LCD, 5 buttons, BCI for LMV26 / LMV36, degree of protection IP54.
See Data Sheet N7542.



Ordering (cont´d)

Flame detectors

QRA2
Flame detector for use with Siemens burner controls, for the supervision of gas flames and yellow- / blue-burning oil flames as well as ignition spark checking. Plastic housing, metalized to prevent static charging caused by the air flow from the fan. For direct mounting on the burner. The detectors can be supplied with or without securing flange and clamp. See Data Sheet N7712.



QRA4
Flame detector for use with Siemens burner controls, for the supervision of gas flames and yellow- or blue-burning oil flames as well as for ignition spark proving.
See Data Sheet N7711.



QRA10
Flame detector for use with Siemens burner controls, for the supervision of gas flames and yellow- / blue-burning oil flames as well as ignition spark checking. Die-cast aluminum housing with a 1 in. mounting coupling and connection facility for cooling air. The housing of this detector has a bayonet fitting which allows it to be secured either directly to the 1 in. mounting coupling or to the AGG06. The 1 in. mounting coupling can be screwed to a viewing tube or to the AGG07. The Pg cable gland can be removed and replaced, if some other detector cable shall be used.
See Data Sheet N7712.



QRB1
Photo resistive flame detector for use with Siemens burner controls, for the supervision of oil flames in the visible light spectrum. Especially suited for use with burner controls for small capacity burners in intermittent operation.
See Data Sheet N7714.



QRB3
Photo resistive flame detector for use with Siemens burner controls, for the supervision of oil flames in the visible light spectrum. Especially suited for use with burner controls for small capacity burners in intermittent operation.
See Data Sheet N7714.

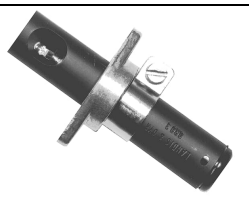

QRB4
Yellow flame detector for use with Siemens burner controls, for the supervision of oil flames in the visible light spectrum. The QRB4 is used in connection with oil burner controls in intermittent operation. Refer to data sheet N7720.



QRC
Blue-flame detector for use with Siemens burner controls, for the supervision of blue- or yellow-burning oil or gas flames. Especially suited for use with burner controls for small capacity burners in intermittent operation.
See Data Sheet N7716.

Frontal illumination:



Lateral illumination:



Actuators

SQM33.4
Rated torque 1.2 Nm (0.8 Nm holding torque when dead), running time 5 s, stepper motor, front mounting, D-type drive shaft.
See Data Sheet N7813.

SQM33.5
Rated torque 3 Nm (2.6 Nm holding torque when dead), running time 5 s, stepper motor, front mounting, D-type drive shaft.
See Data Sheet N7813.



SQM33.7
Rated torque 10 Nm (6 Nm holding torque when dead), running time 17 s, stepper motor, front mounting, D-type drive shaft.
See Data Sheet N7813.

SQN1
Rated torque 1 Nm (0.2 Nm holding torque when dead), running time 5 s, stepper motor, front mounting, D-type drive shaft.
See Data Sheet N7803.



Ordering (cont´d)

Connector sets

AGG3.131
Article no.: **BPZ:AGG3.131**
Complete connector set RAST2.5 / RAST3.5 / RAST5 for gas / oil applications, single pack.
See Object List C7541 (74 319 0637 0).

AGG3.132
Article no.: **BPZ:AGG3.132**
Complete connector set RAST2.5 / RAST3.5 / RAST5 for gas- / oil applications, pack of 10.
See Object List C7541 (74 319 0637 0).

Example: X5-02



AGG3.131	AGG3.132	Connector type	Terminal	Description
1	10	RAST5	X3-02	Air pressure switch (LP)
1	10	RAST5	X3-03	Burner flange
1	10	RAST5	X3-04	Power supply (L, N, PE) for safety loop (SK)
1	10	RAST5	X3-05	• Alarm (AL) • Fan motor (M)
1	10	RAST5	X4-02	Ignition (Z)
1	10	RAST5	X5-01	• Gas pressure switch-min (Pmin) • Oil pressure switch-min (Pmin)
1	10	RAST5	X5-02	• Gas pressure switch-max (max) • Oil pressure switch-max (Pmax)
1	10	RAST5	X5-03	External load controller (LR)
1	10	RAST5	X6-03	Safety valve (SV)
1	10	RAST5	X7-01	Fuel valve (V2)
1	10	RAST5	X7-02	Fuel valve (V3)
1	10	RAST5	X8-02	Fuel valve (V1)
1	10	RAST5	X8-04	• Reset • Operating mode display (B4)
1	10	RAST5	X9-04	• Gas pressure switch (Pmin/Pmax) • Pressure switch valve proving (P LT)
1	10	RAST5	X10-05	Flame detector ION, QRB, QRC
1	10	RAST5	X10-06	Flame detector QRA2 / QRA4
1	10	RAST5	X75	Fuel meter
1	10	RAST3.5	X74	1 x 5-pin connector / Variable speed drive (VSD)
1	10	RAST3.5	X64	1 x 5-pin connector / Reserve
1	10	RAST2.5	X92	Modbus (COM)

Example: X5-02

AGG3.151
Article no.: **BPZ:AGG3.151**
Connector set for AGM60.1A9 (US), RAST5, set of 10 AGM60.1A9.



AGG3.151	Connector type	Terminal	Description
1	RAST5	X5-02	Fuel 1: Pressure switch-max (Pmax) or POC
1	RAST5	X6-02	Fuel 1: Safety valve (SV) / magnetic clutch
	RAST5	X7-02	Fuel valve (V3)
1	RAST5	X8-02	Fuel 1: Fuel valve (V1)
1	RAST5	X8-03	Fuel 1: Fuel valve (V2)
1	RAST5	X22-02	Fuel 0: Pressure switch-max (Pmax) or POC
1	RAST5	X24-04	Fuel 0: Fuel valve (V1) / fuel valve (V2)
	RAST5	X24-05	Fuel 0: Pilot valve (PV)
1	RAST5	X24-06	Fuel 0: Safety valve (SV)
1	RAST5	X31-01	• Power supply • Fuel selector switch
1	RAST5	X31-02	Fuel selector switch
1	RAST5	X32-01	Connecting plug for LMV26/ LMV36
1	RAST5	X32-02	External load controller (LR)

Ordering (cont´d)

AGG9
Single connectors
Packing unit 200 in total.

Example X5-03



Article no.	Type	Type of connector	Terminal	Description
BPZ:AGG9.203	**AGG9.203**	RAST5	X3-02	Air pressure switch (LP)
BPZ:AGG9.204	**AGG9.204**	RAST5	X3-03	Burner flange
BPZ:AGG9.206	**AGG9.206**	RAST5	X8-04	• Reset • Operating display (B4)
BPZ:AGG9.209	**AGG9.209**	RAST5	X10-06	Flame detector QRA2/QRA4/QRA10
BPZ:AGG9.217	**AGG9.217**	RAST5	X75	Fuel meter
BPZ:AGG9.303	**AGG9.303**	RAST5	X3-05	• Alarm (AL) • Fan motor (M)
BPZ:AGG9.304	**AGG9.304**	RAST5	X4-02	Ignition (Z)
BPZ:AGG9.306	**AGG9.306**	RAST5	X5-01	• Gas pressure switch-min (Pmin) • Oil pressure switch-min (Pmin)
BPZ:AGG9.307	**AGG9.307**	RAST5	X5-02	• Gas pressure switch-max (Pmax) • Oil pressure switch-max (Pmax)
BPZ:AGG9.309	**AGG9.309**	RAST5	X6-03	• Safety valve (SV)
BPZ:AGG9.310	**AGG9.310**	RAST5	X7-01	• Fuel valve (V2)
BPZ:AGG9.311	**AGG9.311**	RAST5	X7-02	• Fuel valve (V3)
BPZ:AGG9.313	**AGG9.313**	RAST5	X9-04	• Gas pressure switch (Pmin/Pmax) • Pressure switch valve proving (P LT)
BPZ:AGG9.403	**AGG9.403**	RAST5	X5-03	External load controller (LR)
BPZ:AGG9.406	**AGG9.406**	RAST5	X8-02	Fuel valve (V1)
BPZ:AGG9.501	**AGG9.501**	RAST5	X3-04	Power supply (L, N, PE) for safety loop (SK)
BPZ:AGG9.504	**AGG9.504**	RAST5	X10-05	Flame detector ION, QRB, QRC
BPZ:AGG9.853	**AGG9.853**	RAST3.5	X64	1 x 5-pin connector / reserve
BPZ:AGG9.853	**AGG9.853**	RAST3.5	X74	1 x 5-pin connector / variable speed drive (VSD)

Ordering (cont´d)

Accessories

AGG5.310
Article no.: **BPZ:AGG5.310**
Accessories set speed control, for burner management systems, composed of sensor disk ∅ 50, sensor and mounting set.
See Mounting instructions M7550.1 (74 319 9322 0).



Cables

AGV50.100
Article no.: **BPZ:AGV50.100**
Signal cable for AZL2, with RJ11 connector, length 1 m, pack of 10.

AGV50.300
Article no.: **BPZ:AGV50.300**
Signal cable for AZL2, with RJ11 connector, length 3 m, pack of 10.

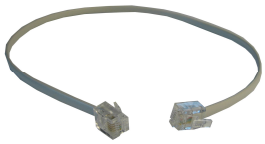

AGV61.100
Article no.: **BPZ:AGV60.50**
Connecting cable between LMV26 / LMV36 and AGM60, cable length 0.5 m.
See Basic Documentation P7547.



Proportional controlling element with mounting plate

VKP
Proportional controlling element for mounting between threaded flanges in gas trains.
Refer to Data Sheet N7646.



ASK33.1
Article no.: **BPZ:ASK33.1**
Larger mounting plate required to replace existing mounting plate. Required for mounting the actuators SQM4 or SQM33.
Refer to Data Sheet N7646.



ASK33.2
Article no.: **BPZ:ASK33.2**
Additional mounting plate is required for mounting the actuator SQN13.
Refer to Data Sheet N7646.



Gas damper for mounting kit

VKF41.xxxC
Butterfly valves designed in intermediate flange design, for integration into gas trains.
Refer to Data Sheet N7632.





ASK33.4
Article no.: **BPZ:ASK33.4**
Mounting kit for mounting the actuators SQM33.5 on the butterfly valve VKF41.xxxC.
Refer to Data Sheet N7632.



Transformer

A5Q20002669
Article no.: **BPZ:A5Q20002669**
Transformer to increase ionization voltage for AC 120 V devices.
See User Documentation A7541.2.



ПРОМЭЛЕКТРОНИКА / sales@prom-elec.com

Connection and internal diagram LMV26 / LMV36

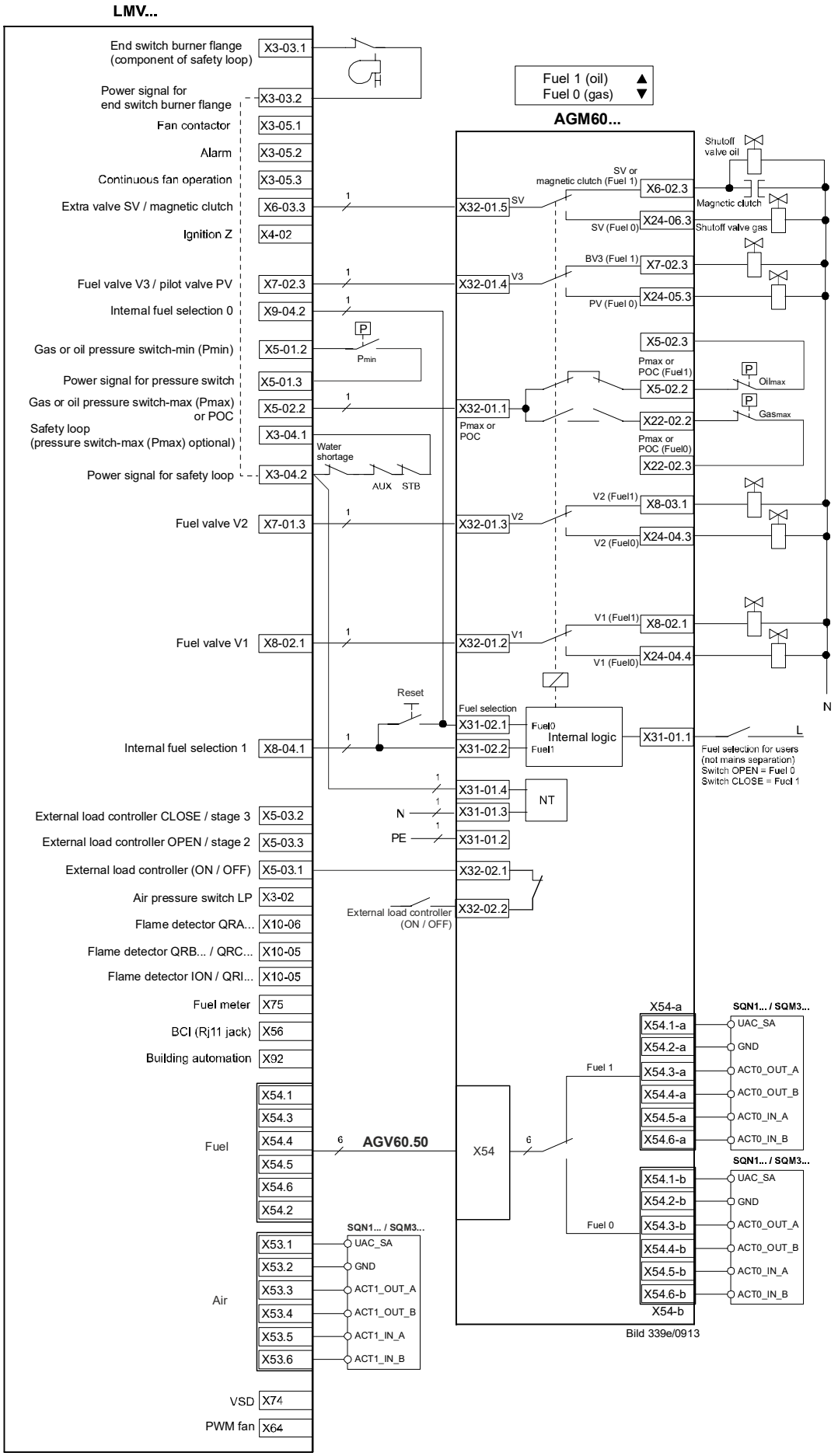

Shielding:

For shielding the cables on the VSD, refer to:

- Siemens *SED2* VSD Commissioning Manual (G5192), chapters 4 and 7, or
- Danfoss Operation Manual *VLT 6000* (MG60A703), chapter *Installation*

Switching between 2 ratio control curves

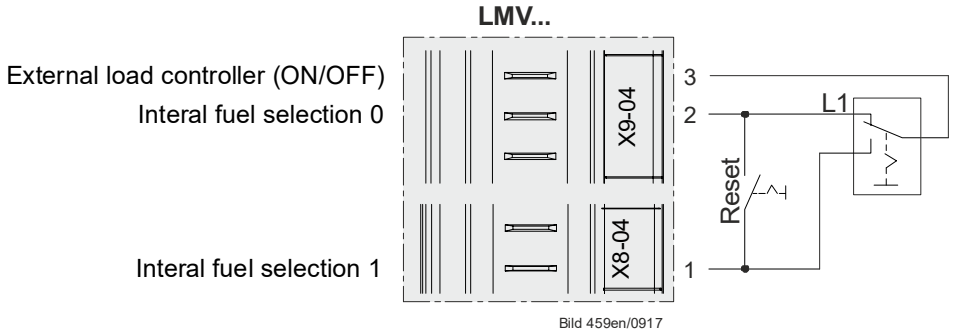

Bild 459en/0917

LMV26 / LMV36

General

Mains voltage	AC 230 V -15% / +10%
Mains frequency	50 / 60 Hz ±6%
Power consumption	<30 W (typically)
Safety class	I, with parts according to II and III to EN 60730-1:2016
Degree of protection	IP00 to DIN EN 60529:1991 + A1:2000 + A2:2013
	Note The burner or boiler manufacturer must ensure degree of protection IP40 for the LMV26 / LMV36 as per EN 60529:1991 + A1:2000 + A2:2013 through adequate installation
Mode of operation	Type 2B in accordance with EN 60730-1:2016
Rated surge voltage	In accordance with EN 60730-1:2016, section 20 (OC III)
Voltage and current for the purposes of the EMC emitted interference tests	The emitted interference measurement test takes place with mains voltage and maximum power consumption

Terminal loading *Inputs*

Permissible primary fuse (Si) (external)	Max. 16 AT



Caution!
Risk of damage to the switching contacts!
If the external primary fuse (Si) is blown due to overload or short-circuit at the terminals, the LMV26/LMV36 must be replaced.

Unit fuse F1 (internal)	6.3 AT (IEC 60127-2:2014)
Mains supply: Input current depending on the operating state of the unit	
Undervoltage	
• Safety shutdown from operating position at mains voltage	Approx. AC 190 V
• Restart on rise in mains voltage	Approx. AC 195 V
Status inputs: Status inputs (with the exception of the safety loop) of the contact feedback network (KRN) are used for system supervision and require mains-related input voltage	
• Input safety loop	Refer to *Terminal loading outputs*
• Input currents and input voltages	
- UeMax	UN +10%
- UeMin	UN -15%
- IeMax	1,5 mA peak
- IeMin	0,7 mA peak
• Contact material recommendation for external signal sources (air pressure switch, pressure switch-min, pressure switch-max, etc.)	Gold-plated silver contacts
• Transition / settling behavior / bounce	
- Perm. bounce time of contacts when switching on / off	Max. 50 ms (after the bounce time, contact must stay closed or open)
• UN	AC 230 V
• Voltage detection	
- On	AC 180…253 V
- Off	<AC 80 V

Terminal loading *Outputs*

Total contact loading:	
• Rated voltage	AC 230 V, 50 / 60 Hz
• Unit input current (safety loop) from: - Fan motor contactor - Ignition transformer - Fuel valves - Oil pump / magnetic clutch (optional via AGM60)	Max. 5 A

Individual contact loading:	
Fan motor contactor	
• Rated voltage	AC 230 V, 50 / 60 Hz
• Rated current	2 A
• Power factor	Cosφ >0.4
Alarm output	
• Rated voltage	AC 230 V, 50 / 60 Hz
• Rated current	1 A
• Power factor	Cosφ >0.4
Ignition transformer	
• Rated voltage	AC 230 V, 50 / 60 Hz
• Rated current	2 A
• Power factor	Cosφ >0.2
Fuel valves	
• Rated voltage	AC 230 V, 50 / 60 Hz
• Rated current	2 A
• Power factor	Cosφ >0.4
Operation display	
• Rated voltage	AC 230 V, 50 / 60 Hz
• Rated current	0,5 A
• Power factor	Cosφ >0.4
Safety valve (magnetic clutch / oil pump)	
• Rated voltage	AC 230 V, 50 / 60 Hz
• Rated current	2 A
• Power factor	Cosφ >0,4
Connections for pressure switch	
• Rated voltage	AC 230 V, 50 / 60 Hz
• Rated current	1.5 mA
• Power factor	---
Power supply for pressure switch-max / POC (X5-02 pin 3 or X22-02 pin 3)	
• IaMax	<10 mA
Fuel feedback to LMV26 / LMV36 (X31-02 pin 1 or X31-02 pin 2)	
• IaMax	<10 mA

Analog output / load output X74 pin 3

Accuracy of output voltage	±1%

Cable lengths

Mains line AC 230 V	Max. 100 m (100 pF/m)
Display, BCI	For installation under the burner hood or in the control panel Max. 3 m (100 pF/m)
Load controller X5-03	Max. 20 m (100 pF/m)
Load controller analog X64 (24 mA)	Max. 20 m (100 pF/m)
Safety loop / burner flange (total)	Max. 20 m (100 pF/m)
External lockout reset button	Max. 20 m (100 pF/m)
Safety valve	Max. 20 m (100 pF/m)
Load output ¹)	Max. 10 m (100 pF/m)
VSD control ¹)²)	Max. 3 m (100 pF/m)
Speed input	Max. 3 m (100 pF/m)
Fuel valve (V1 / V2 / V3)	Max. 3 m (100 pF/m)
Pilot valve	Max. 3 m (100 pF/m)
Ignition transformer	Max. 3 m (100 pF/m)
Other lines	Max. 3 m (100 pF/m)

¹) Do not run the cable together with other cables. If not observed, hum voltage might cause electromagnetic interference

²) Shorter cable length due to closed control loop

Specification as per EN 60730-1:2016	
Type of shutdown or interruption of each circuit	
Shutdown with microswitch	1-pole
Mode of operation	Type 2 B

Cross-sectional areas

The cross-sectional areas of the mains power lines (L, N, and PE) and, if required, the safety loop (safety limit thermostat, water shortage, etc.) must be sized for rated currents according to the selected external primary fuse. The cross-sectional areas of the other cables must be sized in accordance with the internal unit fuse (max. 6.3 AT).

Min. cross-sectional area	0.75 mm² (single- or multi-core as per VDE 0100)

Cable insulation must meet the relevant temperature requirements and environmental conditions.

Fuses (F1) used inside the LMV26 / LMV36	6.3 AT (IEC 60127 2:2014)

Electrical connections of actuators

The ready connected actuator cables must not be extended.

AGV50 signal cable AZL2 → BCI	**Signal cable**	Color white Unshielded Conductor 4 x 0.141 mm² With RJ11-plug
	Cable length - AGV50.100 - AGV50.300	 1 m 3 m
	Location	Under the burner hood (extra measures required for SKII EN 60730-1:2016)

Environmental conditions	**Storage**	EN 60721-3-1:1997
	Climatic conditions	Class 1K3
	Mechanical conditions	Class 1M2
	Temperature range	-20...+60 °C
	Humidity	<95 % r.h.
	Transport	EN 60721-3-2:1997
	Climatic conditions	Class 2K2
	Mechanical conditions	Class 2M2
	Temperature range	-30...+60 °C
	Humidity	<95 % r.h.
	Operation	EN 60721-3-3:1995 + A2:1997
	Climatic conditions	Class 3K3
	Mechanical conditions	Class 3M3
	Temperature range	-20...+60 °C
	Humidity	<95 % r.h.
	Installation altitude	Max. 2,000 m above sea level



Caution!
Condensation, formation of ice and ingress of water are not permitted!

Flame supervision with ionization probe

For continuous operation!

No-load voltage at ION terminal (X10–05 pin 2)	Approx. U_{Mains}

Caution!
The ionization probe must be protected against electric shock hazard (electric shock hazard)!

Short-circuit current	Max. AC 1 mA
Required detector current	Min. DC 2.3 µA, flame display approx. 30% When the more sensitive flame supervision is activated, the required detector current is halved (see chapter *Flame detection sensitivity*).
Possible detector current	Max. DC 12…30 µA, flame display approx. 100%
Max. perm. length of detector cable (laid separately)	3 m (wire–ground 100 pF/m)

Warning!
Simultaneous operation of QRA and ionization probe is not permitted!

Note
The higher the detector cable's capacitance (cable length), the more voltage at the ionization probe, and thus the detector current, drops. Long cable lengths plus very highly resistive flames might necessitate low-capacitance detector cables (e.g. ignition cable). In spite of technical measures taken in the circuitry aimed at compensating potential adverse effects of the ignition spark on the ionization current, it must be made certain that the minimum detector current required will already be reached during the ignition phase. If this is not the case, the connections on the primary side of the ignition transformer must be changed and / or the electrodes relocated.

Threshold values when flame is supervised by an ionization probe:	
• Start prevention (extraneous light)	Flame intensity (parameter 954) ≥18%
• Operation	Flame intensity (parameter 954) >24%

Ionization input

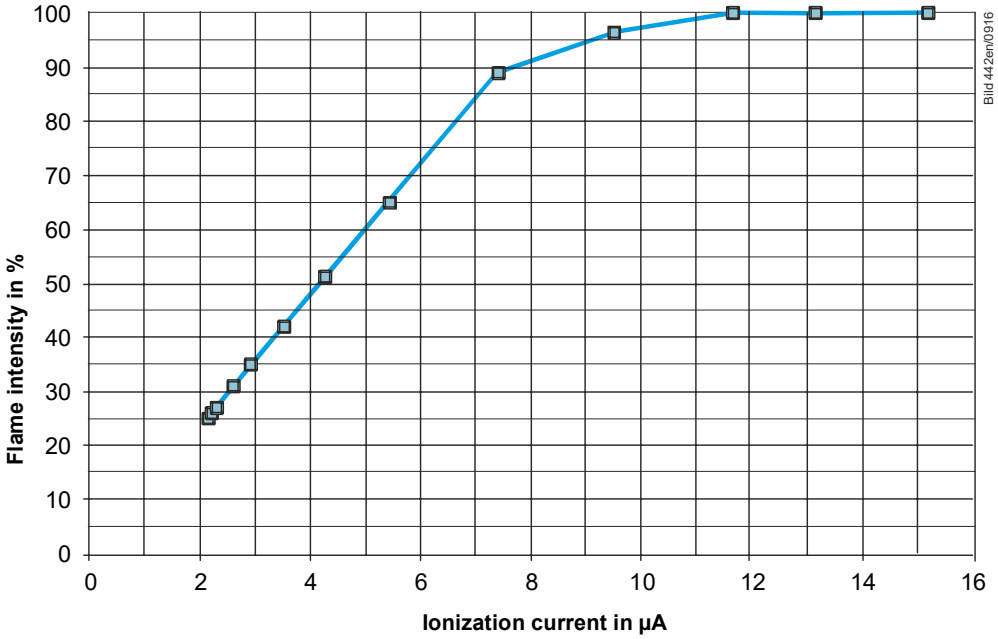

Measuring circuit for detector current measurement

Ionization probe

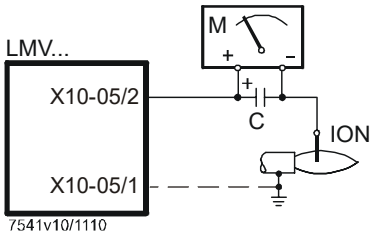

Legend	
C	Electrolytic capacitor 100...470 µF; DC 10...25 V
ION	Ionization probe
M	Microammeter Ri max. 5000 Ω

Flame supervision with QRA2/QRA4/QRA10

Caution!
If QRA2-UV tubes / QRA4-UV tubes / QRA10-UV tubes are used for flame supervision on the LMV26 / LMV36, it must be ensured that the LMV26 / LMV36 is permanently connected to power (DIN EN 298), thus enabling the LMV26 / LMV36 to detect flame detector failures during startup and shutdown. Generally, the LMV26 / LMV36 works with QRA flame detectors in intermittent operation. For technical data, refer to Data Sheet N7712 covering QRA2 / QRA10 UV flame detector! For technical data, refer to Data Sheet N7711 covering QRA4 UV flame detector!

Operating voltage	Max. 350 V peak
Required detector current in operation	Min. 30 µA When the more sensitive flame supervision is activated, the required detector current is halved (refer to chapter *Flame detection sensitivity* in the Basic Documentation P7547).
Possible detector current in operation	Max. 600 µA
Permissible length of flame detector cable normal cable (laid separately)	Max. 6 m
Threshold values when flame is supervised by QRA:	
• Start prevention (extraneous light)	Intensity of flame (parameter 954) ≥18%
• Operation	Intensity of flame (parameter 954) >24%

Measuring circuit for detector current measurement

UV flame detector QRA

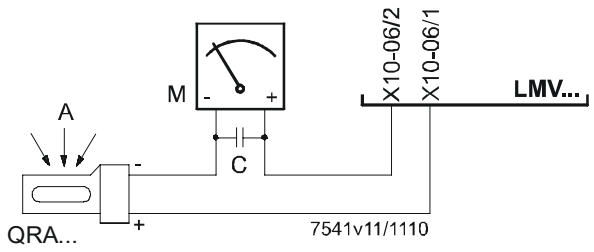

Legend

A	Incidence of light
C	Electrolytic capacitor 100...470 µF; DC 10...25 V
M	Microammeter Ri max. 5000 Ω

Warning!
- **Input QRA is not short-circuit-proof!**
  Short-circuits of X10-06 pin 2 against earth can destroy the QRA input
- **Simultaneous operation of QRA and ionization probe is not permitted!**

Flame supervision with QRB1/QRB3	No-load voltage at QRB1/QRB3 terminal (X10-05 pin 3)	Approx. DC 5 V
	Max. perm. length of QRB1/QRB3 detector cable (laid separately)	3 m (wire – wire 100 pF/m)

Note
A detector resistance of RF <500 Ω is identified as a short-circuit and leads to safety shutdown in operation as if the flame had been lost.

For this reason, before considering the use of a highly sensitive photoresistive detector (QRB1B or QRB3S), it should be checked whether this type of flame detector is indeed required! Increased line capacitance between QRB1/QRB3 connection and mains live wire *L* has an adverse effect on the sensitivity and increases the risk of damaged flame detectors due to overvoltage. Always run detector cables separately!

Threshold values when flame is supervised by QRB1/QRB3:	
Start prevention (extraneous light) with **R**QRB	<400 kΩ Intensity of flame ≥10%
Operation with **R**QRB	<230 kΩ Intensity of flame >16%
Short-circuit detection with **R**QRB	<0.5 kΩ

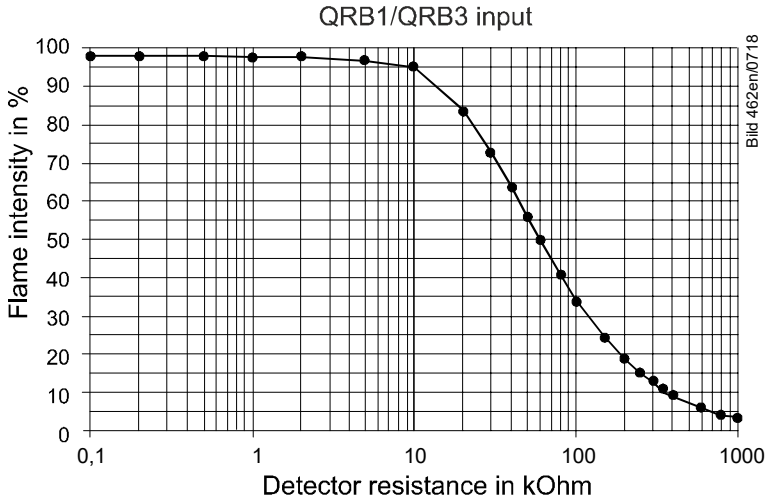

A flame detector resistance of RF <500 Ω is identified as a short-circuit and leads to safety shutdown in operation, like in the case of loss of flame.

Note!
In the case of the QRB1/QRB3, the maximum intensity display is limited to approximately 40% due to the system.

Flame supervision with QRB4	Open-circuit voltage at terminal QRB4 (X10-05 pin 3)	Approx. 5 V DC
	Permissible length of QRB4 detector cable (laid separately)	3 m (wire to wire 100 pF/m)
	Threshold values when flame is supervised by QRB4	
	Start prevention (extraneous light)	Flame intensity (parameter 954) ≥10%
	Operation	Flame intensity (parameter 954) >16%

Note!
In the case of the QRB4, the maximum intensity display is limited to approximately 40% due to the system (parameter 954).

Note!
Connection of QRB4 cables!
Blue cable of QRB4 to terminal X10-05 pin 4.
Black cable of QRB4 to terminal X10-05 pin 3.
Otherwise, the QRB4 will not work.

Flame supervision with QRC

Check the intensity of flame with the AZL2.

For system-specific reasons, the display of maximum flame intensity by the AZL2 is limited to approx. 55%.

Caution!
Flame detectors QRC are only suited for AC 230 V operation.

Start prevention (extraneous light) with I_{QRC}	Ca. 15 µA, display approx. 10% Intensity of flame (parameter 954)
Operation with I_{QRC}	Ca. 25 µA, display approx. 16% Intensity of flame (parameter 954)

	Required detector current (with flame)	Permissible detector current (without flame)	Typical detector current (with flame)
QRC	Min. 35 µA	Max. 5.5 µA	100 µA

The values given in the table above only apply under the following conditions:

- Mains voltage AC 230 V
- Ambient temperature 23 °C

Measuring circuit for detector current measurement

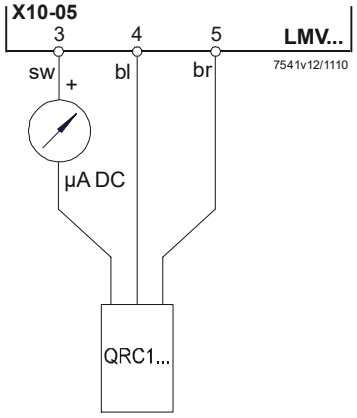

Legend

µA DC	DC microammeter with an internal resistance of Ri = max. 5 kΩ
bl	blue
sw	black
br	brown

AGM60 dual fuel switch unit

Mains voltage	AC 230 V -15% / +10%
Mains frequency	50/60 Hz ±6%
Power consumption	<5 W (typically) (without actuator supply)
Safety class	I with parts according to II and III to EN 60730-1:2016
Galvanic separation between mains voltage terminals and actuator signal lines and actuator supply lines	No
Degree of protection	IP00 according to EN 60529:1991 + A1:2000 + A2:2013

Note!
The burner or boiler manufacturer (OEM) must ensure degree of protection IP40 to EN 60529:1991 + A1:2000 + A2:2013 for burner controls by adequate installation of the AGM60.

The AGM60 together with the LMV26 / LMV36 is suited for installation under the burner hood or inside a control cabinet or control panel

Detection time fuel changeover	<400 ms
Switching frequency fuel changeover	Min. 3 s
Switching cycles fuel changeover	Max. 5´000
Permissible primary fuse (Si) (external)	Max. 6.3 AT Power must always be supplied via the LMV26 / LMV36 (refer to chapter *Inputs / Outputs*)

Caution!
Risk of damage to the switching contacts!
If the external primary fuse (Si) is blown due to overload or short-circuit at the terminals, the AGM60 must be replaced.

Mains supply: Input current depending on the operating state of the unit	
Mains voltage is monitored by the LMV26 / LMV36	
Dimensions (W x H x D)	180.7 x 120.7 x 51.7 mm
Mounting	Top hat rail to DIN EN 60715, 35 mm or screwed

Terminal output *Inputs*

Status input: Fuel selection, pressure switch	
• Input currents and input voltages	
- UeMax	UN +10%
- UeMin	UN -15%
- IeMax	1.5 mA peak
- IeMin	0.7 mA peak
• Contact material recommendation for external switching contact, transducer (pressure switch-max, POC)	Gold-plated silver contacts
• Transition / settling behavior / bounce	
- Perm. bounce time of contacts when switching on/off	Max. 50 ms (after the bounce time, the contact must stay closed or open)
• UN	AC 230 V
• Voltage detection	
- On	AC 90...132 V
- Off	<AC 40 V

Terminal output *Outputs*

Total contact output:	
• Rated voltage	AC 230 V, 50/60 Hz
Refer also *Total contact output* in chapter *Terminal output Outputs*	

Individual contact loads:	
Fuel valve	
• Rated voltage	AC 230 V, 50/60 Hz
• Rated current	2 A
• Power factor	Cosφ >0.4
Safety valve (magnetic clutch / oil pump)	
• Rated voltage	AC 230 V, 50/60 Hz
• Rated current	2 A
• Power factor	Cosφ >0.4
Connections for pressure switch	
• Rated voltage	AC 230 V , 50/60 Hz
• Rated current	1.5 mA
• Power factor	---
Power supply for pressure switch-max / POC (X5-02 pin 3 or X22-02 pin 3)	
• IaMax	<10 mA
Fuel feedback to LMV26 / LMV36 (X31-02.1 or X31-02.2)	
• IaMax	<10 mA

Cable lengths

Mains line LMV26 / LMV36 → AGM60	Max. 3 m (100 pF/m)
Fuel valves	Max. 3 m (100 pF/m)
Other lines	Max. 3 m (100 pF/m)
Fuel selector	Max. 20 m (100 pF/m)
Load controller	Max. 20 m (100 pF/m)

Specification as per EN 60730-1:2016	
Type of shutdown or interruption of each circuit	
Shutdown with microswitch	Single-pole
Mode of operation	Type 2 B

Cross-sectional areas

The cross-sectional areas of the power supply lines (L, N and PE) must be capable of carrying the rated currents according to the built-in unit fuse of the respective LMV26 / LMV36 (max. 6.3 AT).

Cross-sectional area	Min. 0.75 mm² (single- or multi-core to VDE 0100)

Cable insulations must satisfy the relevant temperature requirements and environmental conditions.

Electrical connections of actuators

The fixed connected actuator cables must not be extended.

Environmental conditions

Storage	EN 60721-3-1:1997
Climatic conditions	Class 1K3
Mechanical conditions	Class 1M2
Temperature range	-20...+60 °C
Humidity	<95% r.h.
Transport	EN 60721-3-2:1997
Climatic conditions	Class 2K2
Mechanical conditions	Class 2M2
Temperature range	-30...+60 °C
Humidity	<95% r.h.
Operation	EN 60721-3-3:1995 + A2:1997
Climatic conditions	Class 3K3
Mechanical conditions	Class 3M3
Temperature range	-20...+60 °C
Humidity	<95% r.h.
Installation altitude	Max. 2,000 m above sea level



Caution!
Condensation, formation of ice and ingress of water are not permitted!

Dimensions

Dimensions in mm

LMV26 / LMV36

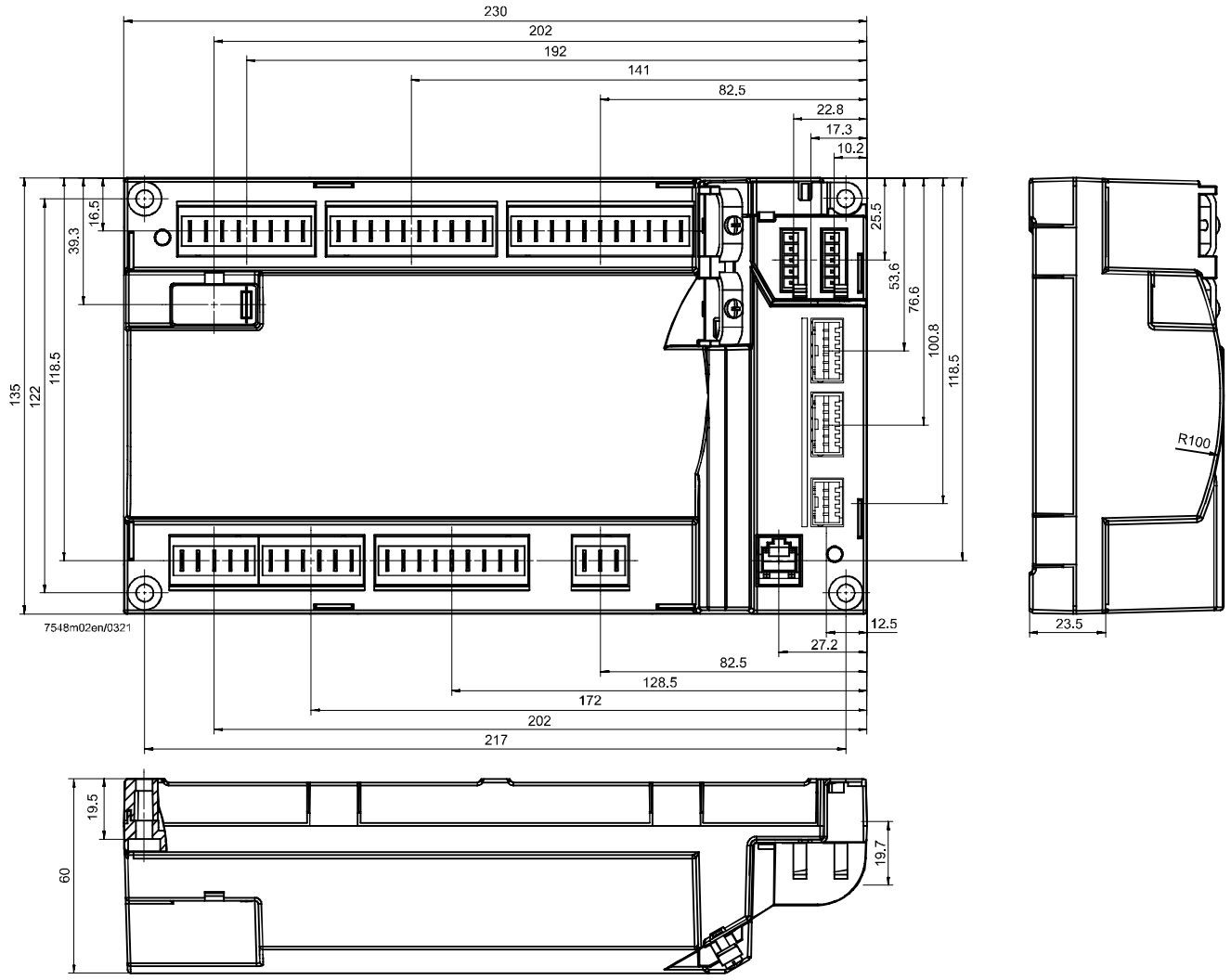

Dimensions (cont´d)

Dimensions in mm

AGM60

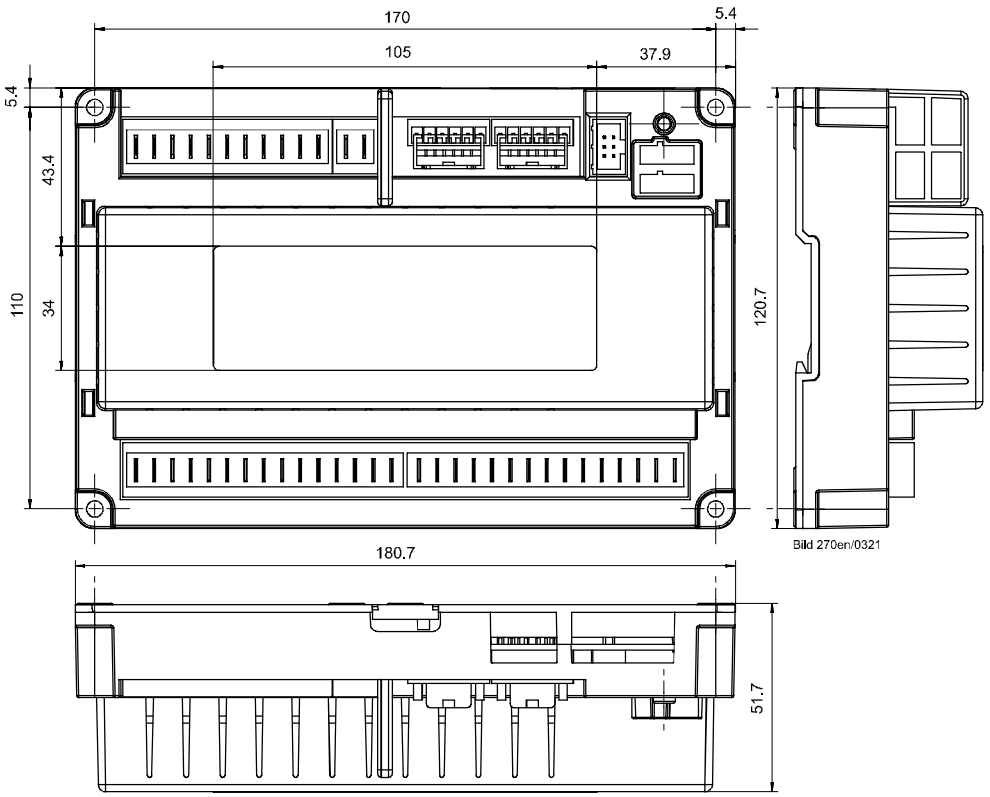

© 2021 Siemens AG Smart Infrastructure, Berliner Ring 23, D-76437 Rastatt
Subject to change!