BCS 300
Automatic oil and gas burner control system, for electronically monitoring and controlling burner systems with speed and O_2 control

1.40

DUNGS®
Combustion Controls



Technical description
The Burner Control System (BCS) is a modular automatic burner control system for open and closed loop control of oil, gas and dual-fuel burners with medium to high output. It consists of the following distributed units which intercommunicate via a safety-oriented bus system.

Thanks to the flexible structure of the BCS, extensions and additions via CAN Bus are possible by arrangement.

Approvals - gas
EU type test approval as per EU Gas Appliance Directive:

BCS 300 CE-0085 AU 2358

EU type test approval as per EU Pressure Equipment Directive:

BCS 300 CE 0036

Approvals for oil types
Registration/type test number

BCS 300 5F 186/00 DB

Printed in Germany • Edition 02.10 • Nr. 230 585

ООО Промэлектроника
sales@prom-elec.com

ПРОМЭЛЕКТРОНИКА / sales@prom-elec.com

BCS 300
Burner Control System

Schematic diagram of the oil and gas burner system

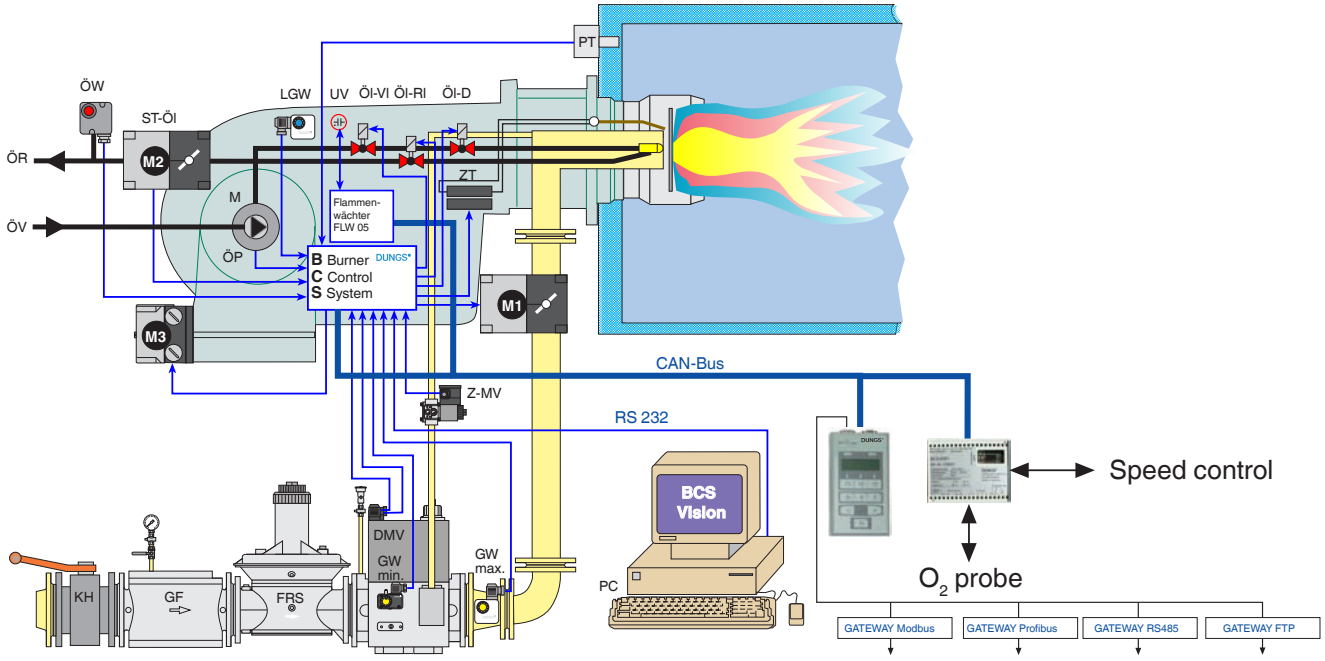

Legend to schematic diagram of BCS

DMV	Double solenoid valve, solenoid valves on gas side and burner side	M	Blower motor	OilW	Oil pressure switch
FRS	Gas pressure control	Oil-VL	Oil solenoid valve supply line	PT	Controller
GF	Gas filter	Oil-RL	Oil solenoid valve return line	ST-Oil	Oil control valve actuator
GW min.	Min. gas pressure switch	Oil-D	Nozzle linkage valve	ST-Gas	Gas damper actuator
GW max.	Max. gas pressure switch	OilP	Oil pump	UV	Flame sensor
KH	Ball valve	OilV	Oil supply line	Z-MV	Ignition gas solenoid valve
LGW	Air pressure switch	OilR	Oil return line	ZT	Ignition transformer

Flame supervision
The flame monitoring device is separate from the basic unit and connected to the basic unit by a CAN bus. Various flame sensors can be connected to the flame monitoring device.

Ionization
UV sensor
Photoresistor (light)
2 contact inputs

Depending on operating mode, two flame sensors can also be combined with one another.

All flame monitoring signals (UV, ionization, light) are evaluated for intensity and can be displayed on the basic module using the hand-held programmer.

Hand-held programmer
The hand-held programmer has a 4 line LC display on which information on the status of the burner control system can be displayed.

Time, date, fault memory, reference values, actual values; operating hours; number of start-ups, frequency, O2 values, automatic burner control program selection; changing parameters, e.g. preventilation period, controller enable time, postventilation period, stabilisation period, pre-startup system test.

All inputs and outputs can be checked for wiring defects using the keys on the hand-held programmer.
A password must be entered before parameters may be changed.
The hand-held programmer is suitable for installation in the control cabinet.

Actuator
Torque 15 Nm
Angular resolution 0.02 °
Runtime 22.3 s to 90 °
Optical feedback system.
No service life problems in comparison with potentiometers.
Protection type IP 54
230 V supply voltage.

No external transformer required.
Digital activation and feedback signals.
Reference point for defining the mechanical zero point of the drive shaft.
Cable lengths up to 20 m are possible.

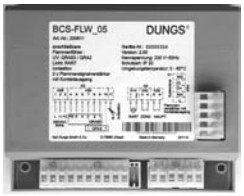





Communication options

BCS-300 can be connected by means of different gateways to superordinate control systems or other external control and surveillance systems.

It is connected via the RS 232 interface of the display and operating module (ABM).

Fieldbus systems

- PROFIBUS DP
- Modbus RTU

Remote control

Data visualisation and storage via internet on the FTP server.

Extended hardware outputs

IO module system for activating analog and digital IO components based on a 2-wire RS 485 bus system.

Block diagram of the BCS

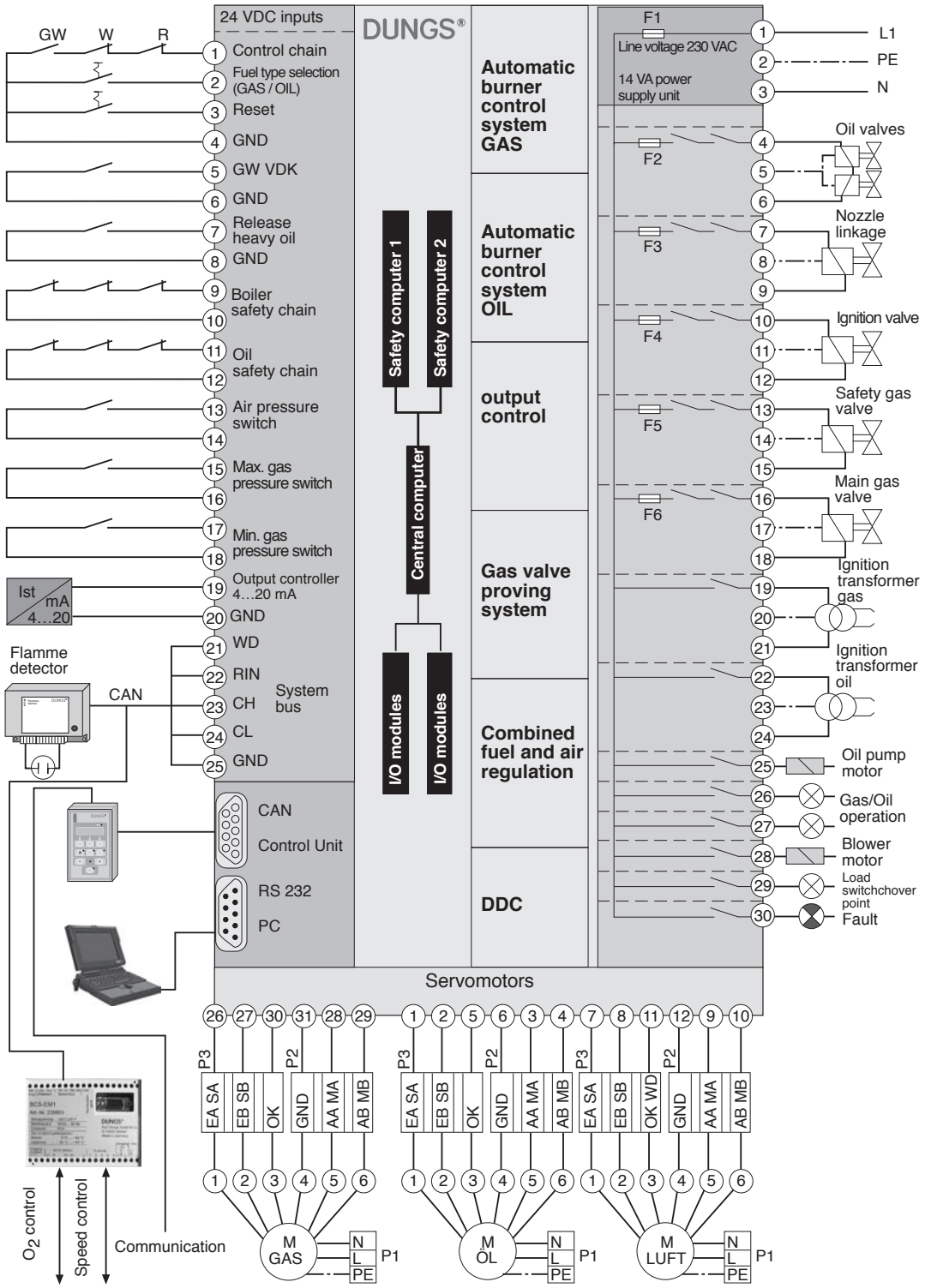

Applications

Six different automatic burner control programs can be selected depending on required application.

- Operation with pilot valve
  gas take-off upstream of the safety valve and the main valve.
- Operation with pilot valve.
  Gas take-off between the safety valve and the main valve.
- Operation with or without valve proving system.

Four different oil burner control system programs can be selected depending on application.
For example with or without pilot valve.

Integrated valve proving system

An integrated valve proving system can be implemented with an additional pressure switch. Switching times are adaptable to pressure, fitting volume and the setting point of the pressure switch.

Integrated controller

For simple applications, a controller configurable as a run-on controller or as a standard controller is integrated. The run-on controller responds to a signal from 4 to 20 mA. However, it does not correct disturbance variables. 4 mA corresponds to low load and 20 mA corresponds to high load.
On the standard controller, the input signal
is also a 4 to 20 mA signal. However, the reference value is set using a PID controller. Disturbance variables are also corrected.

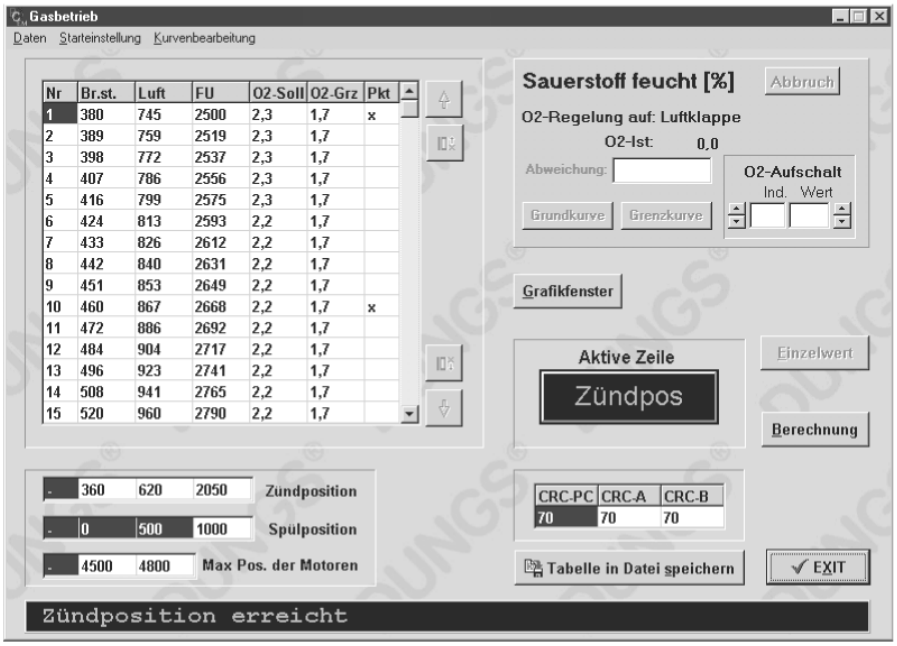

Start-up and configuration is also possible with the PC and the BCS-VisionEM software. During the setting phase, the burner is stopped at various points in the ramp-up procedure, e.g. pre-purge phase, ignition position, etc.
Settings can now be made. The ramp-up procedure is continued as soon as the settings in each individual phase are completed. All monitoring mechanisms are active in setting mode.

BCS-Vision

- Straightforward graphics window
- All key parameters at a glance
- Operation by mouse and keyboard
- Data records can be saved and loaded
- Status display
- Change of the language of the display and operating module

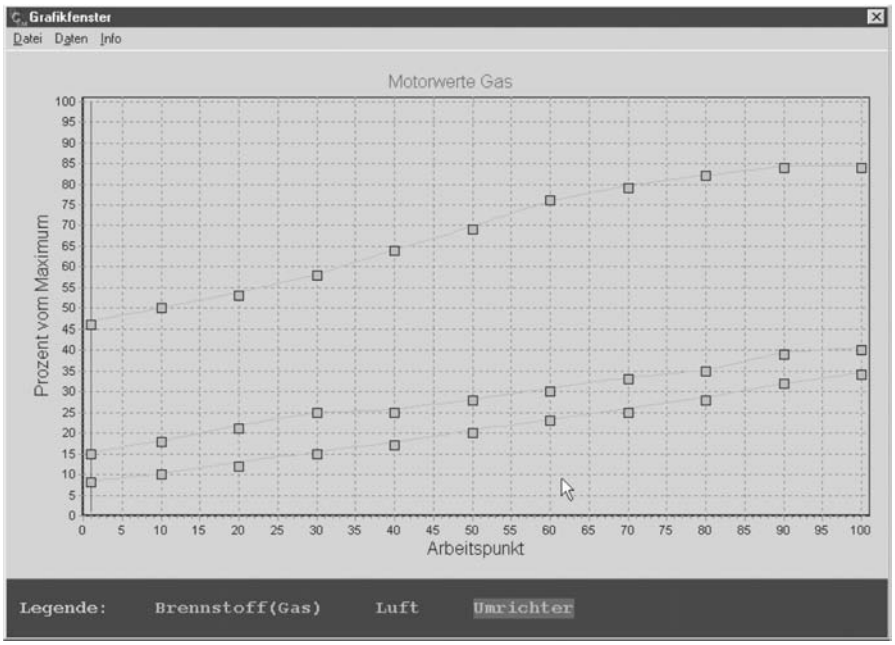

All characteristic curves, whether air, frequency inverter, gas or oil, can be represented graphically. The individual active interpolation points are specially marked. The intermediate points are represented as a line.

Interpolation points can be shifted simply by dragging the mouse. The program computes the intermediate values are automatically.

- Shifting of interpolation points by mouse
- Saving characteristic curves
- Loading characteristic curves

BCS-EM1 for O_2 control

- O_2 probe is fail-safe and suitable for continuous duty in combination with the BCS System
- No reference gas required
- Long service life of probe (> 2 years)
- The control parameters for O_2 optimization are learned automatically with regard to the system configuration
- O_2 control can be switched on and off separately for each fuel type
- Simple regulation at burner start-up
- Continuous digital display of O2 measured value and O_2 optimization status
- Fuel consumption is reduced significantly.
- Short response time of probe -> short stabilization time of O_2 actual values to the reference value and quick correction of disturbances
- The O_2 level is regulated together with fuel-air ratio. ->Less time is required to complete the start-up procedure.

Electrical connection

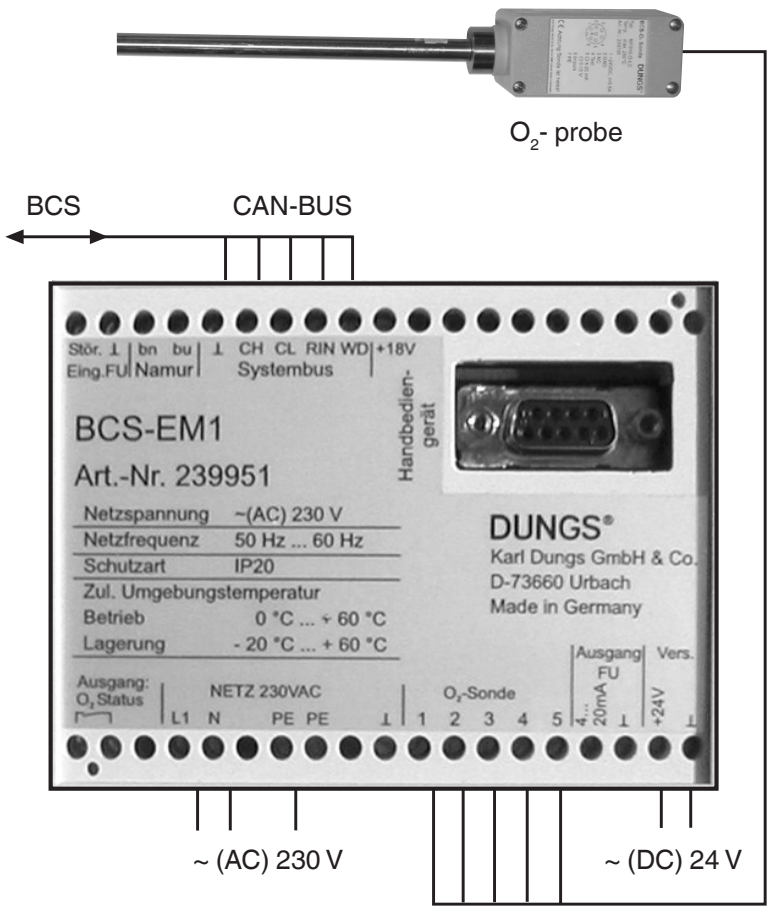

Advantages for operation of a system with O_2 control (optimization)

- The O_2 exhaust gas measuring probe is fail-safe and suitable for continuous duty in combination with the BCS System.
- The O_2 optimization function adjusts the O_2 value specific to burner capacity, and without a limiting curve, until REFERENCE value O_2 = ACTUAL value O_2.
- Manipulated variable adjustment is only limited by the range limits of the actuator (air damper or FU) but not by prescribed limit bands (as with other systems).
- The O_2 exhaust gas measuring probe requires no reference gas. The probe is TÜV-approved (by TÜV Süddeutschland = Technical Inspectorate for South Germany) for use in combination with the BCS System.
- Weather-related interference is compensated, thereby achieving an improvement in burner efficiency.
- Incomplete combustion due to the effects of temperature is impossible.
- Fuel consumption is reduced as the burner can be regulated with significantly less excess air.

BCS-EM1 for speed control

- Frequency inverters are indirectly activated, irrespective of make, by an analog signal (4..20 mA)
- Easy installation or retrofitting through BUS technology
- The speed supervision assignments are issued automatically in dependence on load by the BCS System (without flame)
- Allowance is made for the frequency inverter, blower motor and Namur signal read-in in the safety concept of the BCS System (TÜV-approved)
- Interactive blower speed adjustment at start-up
- For speed feedback, any proximity switch can be interfaced directly to the module after NAMUR

Advantages for the operation of a system with speed control

- Reduction of sound emission (no sound insulation is required in some cases)
- Speed supervision in every load range
- Considerable savings in electrical energy (up to a factor of 0.5)
- The control range of the burner is extended by precise adaptation of the combustion air to the burner control system
- Soft starting greatly reduces mechanical stress on the motor and fan impeller
- Simplification and improvement of air-side burner adjustment
- Improved adaptability of the burner within its operating area to the existing system constellation

Electrical connection

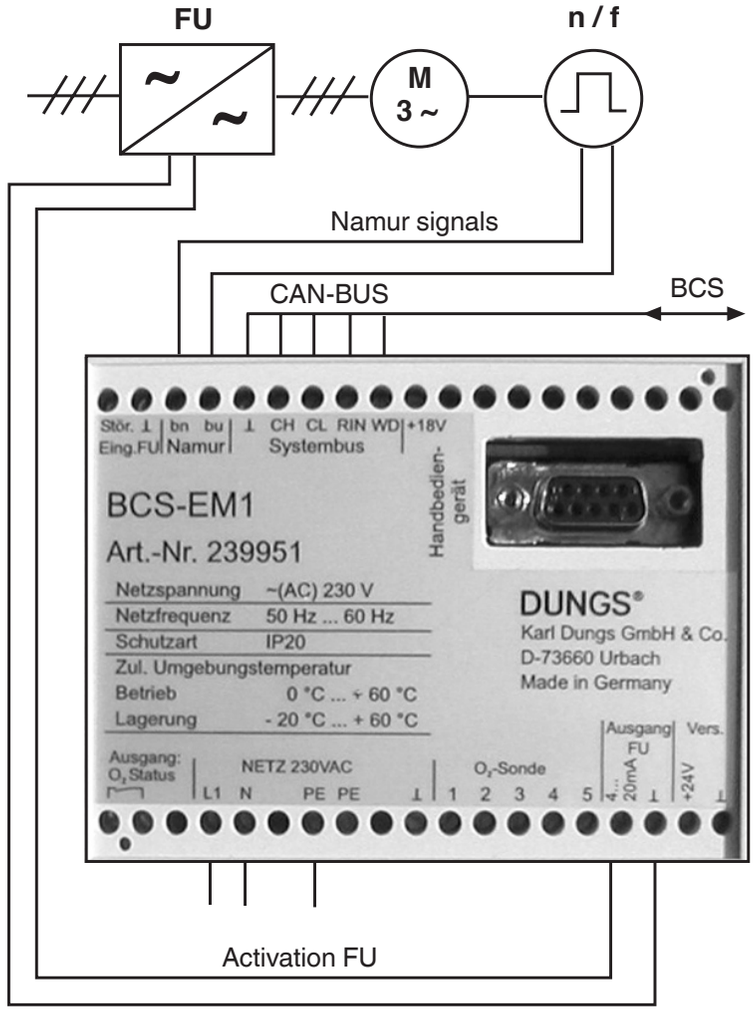

ПРОМЭЛЕКТРОНИКА / sales@prom-elec.com

BCS 300

Automatic oil and gas burner control system, for electronically monitor-ingand controlling burner systems with speed and O_2 control

DUNGS®
Combustion Controls

BCS 300

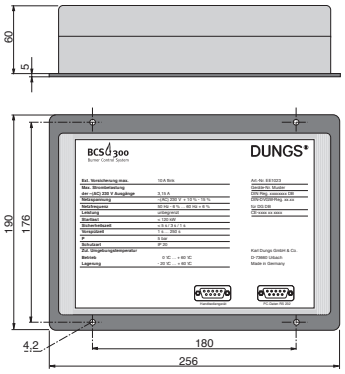

FLW 05 flame detector

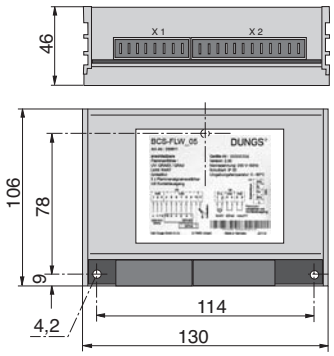

Manual control unit

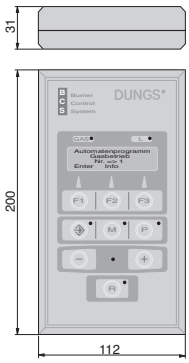

BCS 300 technical data

Operating voltage	230 V(+10 % / -15 %)
Frequency	50 ... 60 Hz
Class of protection	II as per VDE 0660, EN 493-1
Electrical switching cycles	as per EN 298
Mechanical switching cycles	as per TRD 604
Contact rating	3.15 A as per EN 298
Analogue input compliance resistance	25 Ω
Back-up fuse	max. 10 A slow-acting
Equipment fuse	6.3 A slow-acting
	3.1 A slow-acting
Interference immunity	EN 298
Emission	EN 50011 Class A, 150 kHz - 1 GHz
Perm. ambient temperatures	
Storage	-20 °C … +70 °C
Operation	0 °C … +60 °C
Housing protection type (EN 60529)	
BCS basic unit	Enclosure IP 40, terminals IP 20
Display and control unit	Enclosure IP 54, terminals IP 20
BCS-FLW 05, flame detector	Enclosure IP 40, terminals IP 20
	IP 40 must be provided by installation
Installation position	Any
Terminals, can be disconnected	2 x 1.5 mm oder 1 x 2.5 mm
Power consumtion	
BCS (incl. control unit)	< 10 VA
FLW 05	< 1.5 VA
Bus topology	due to the low transfer rate, the bus can have a linear or radial configuration
Classifications of the automatic burner control system	F B L L B B

Actuator drive SAD15

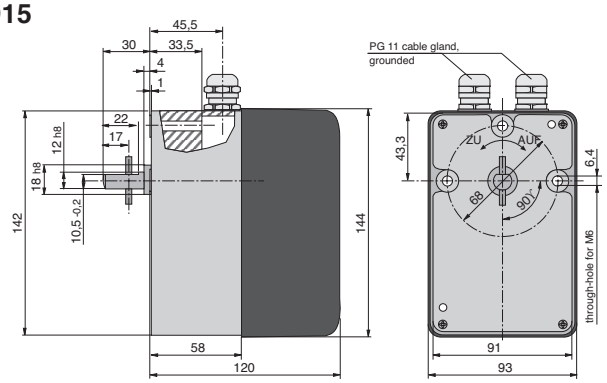

We reserve the right to make any changes in the interest of technical progress.

Head Offices and Factory
Karl Dungs GmbH & Co. KG
Siemensstraße 6-10
D-73660 Urbach, Germany
Telefon +49 (0)7181-804-0
Telefax +49 (0)7181-804-166

Postal address
Karl Dungs GmbH & Co. KG
Postfach 12 29
D-73602 Schorndorf, Germany
e-mail info@dungs.com
Internet www.dungs.com