MULTI-FLAME SERIES
TYPES ECM113-ECE113

MICROPROCESSOR BASED AUTOMATIC CONTROL SYSTEM FOR HOBS, GAS OVENS AND GRILLS WITH ATMOSPHERIC MULTI-BURNER (MANUAL RESET)

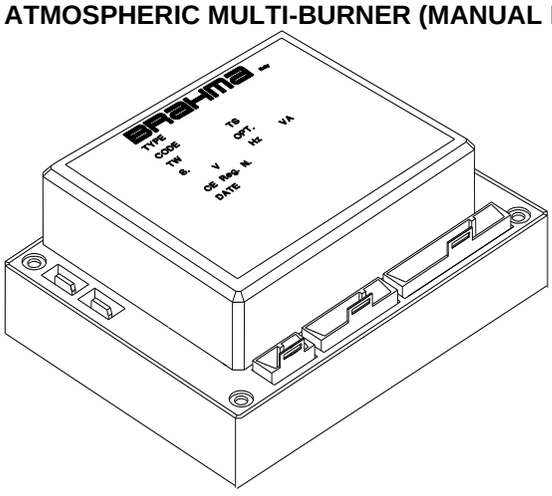

DESCRIPTION

This electronic gas burner control system has been designed specifically for atmospheric burners with intermittent operations (systems for non-permanent operations), used in hobs, gas cookers and grills with multiple burner. This control is equipped with non-volatile lockout, which means that a restart from the safety shut-down condition can be accomplished only by a manual reset.

MAIN FEATURES

Important features are:

- **EC**-Type certification (CE PIN **0051BT3727**) in accordance with **G**as **A**ppliances **R**egulation (EU) 2016/426;
- conformity to EC directives, Electromagnetic compatibility* EMC (immunity) 2014/30/EU and Low-voltage directive 2014/35/EU
- In accordance with EN298:2012 (European Standard for automatic gas and oil burner control systems and flame detection) and with EN60730-2-5 (European Standard for automatic controls with C class software);
- in compliance with EN 30-1-4 (European standard for domestic cooking appliances burning gas)
- forced convection ovens and/or grills;
- cooking plane of ceramic glass;
- burner direct ignition;
- accurate and repeatable timings;
- flame monitoring by the rectification property of the flame (ionisation);
- control of one to three independent flame signals selectable through three selectors;
- remote reset input;
- output signal of operation and error by LED
- external output signal of lockout or residual heat;
- output of a single automatic shut-off solenoid valve;
- multiple re-ignition attempts;
- possibility of connection to balanced mains supply (live-live network);
- possibility of mounting a resistor (0Ω or 100÷470kΩ) in series to the lockout signal output, to avoid possible damages to the control in case the connections of the reset button and the connections of the lockout signal are reversed;

*) The compliance with EMC emission requirements must be checked after the burner control is installed in equipment.

ПРОМЭЛЕКТРОНИКА / sales@prom-elec.com

TECHNICAL DATA

Supply Voltage: 100/240 V ~ - 50/60 Hz

Operating temperature range: -20 °C ÷ +85 °C

Ambient humidity: 95% max at 40 °C

Protection degree: IP 00

Times:

Waiting time **(TW):**	1,5...60 s
Safety time **(TS):**	1…90 s
Spark Ignition time **(TSP):**	(TS - 1) s
Response time in case of flame failure:	< 1 s
Inter-waiting time (Ti):	1…240 s
Pre-Ignition time (Tj):	1…60 s
Lockout time due to parasite flame (Tk):	1…60 s
Re-cycling attempts:	0..10
Maximum Power Consumption:	15 VA @ 230 V

The times given on the control unit label correspond to the guaranteed values. The actual values differ slightly from the values given; waiting time is in fact longer and safety time shorter than their nominal values.

Contact rating:

Gas valve	1 A_{ac} cos φ≥ 0.4
with C option	0.25 A_{dc}
Ignition device	0.5 A cos φ≥ 0.4
with F option	50 mA cos φ≥ 0.4
Lockout or residual heat signal	1 A_{ac} cos φ≥ 0.4
with R option	1 mA cos φ ≥ 0.4
Selectors and Remote Unlock	0.1 A_{ac} cos φ≥ 0.4
LED	5 mA ±20%

Internal fuse rating: 3.15 A Time-delay

External fuse rating (suggested): 2.5 A Fast-blow(*)

* The external fuse rating must be selected according to the applied load; in any case its value must never exceed the internal fuse rating.

Flame control:

The ionization flame detection device makes use of the rectification property of the flame. The control box is more sensitive to flame at starting or during waiting/pre-purge time (negative differential switching).

Minimum ionization current:	0.5 μA
on request	0.15 μA
Recommended ionization current:	3 ÷ 5 times the minimum
Maximum length of the cable:	1 m
Minimum insulation resistance of the electrode and the detection cable to earth	≥ 50 MΩ
Maximum parasitic capacitance of the detection probe:	≤ 1 nF
Maximum short circuit current:	< 200 μA_{ac}

Maximum length of the cables

Solenoid Gas Valve	2 m
Ignition device	2 m
Remote reset and Lockout Signal	10 m
Selectors – Heating demand	<1 m
LED	<1 m

Weight: about 150 g

Varnish-coating: on request

Construction

By using an electronic board assembled with surface mounted components, which houses the “logic core” of the system, it has been possible to reduce the printed circuit board dimensions so that the controller performs the most complicated operations even if its dimensions are extremely compact.

A varistor protects the control from voltage transient on the mains supply, caused for example by atmospheric discharges such as lightning. An internal accessible fuse protects the relays of the control in case of short circuits on the outputs (solenoid valves, ignition device and lockout signal).

OVERALL DIMENSIONS

The automatic controls of this Series can be supplied in different executions but with the same enclosure. The following figure shows the overall dimensions of the devices.

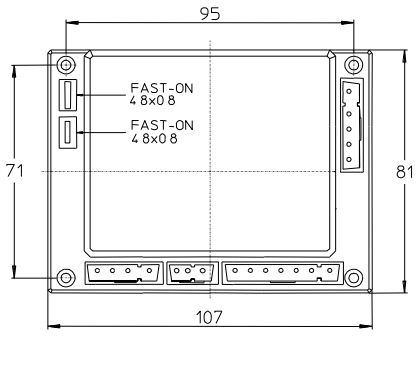

ACCESSORIES

The control are usually supplied with a kit of female connectors (code 16015916) and/or a reset button. Do not fit terminals and female connectors of different types.

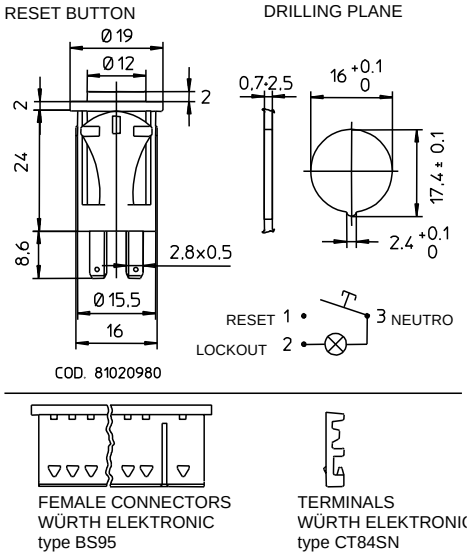

Possible fixing systems

top:	Self-tapping screw	UNI6951AB 2.9x22
	M3x22 screw	UNI6107
bottom:	Screwplast self-forming screw	
	ISO0003 F 3.5x13 and ISO0003 F 3.9x13	

CONNECTION

Figure 1 and 4 show the connection diagram. The following tables show the connectors pin-out.

Connector:	**J6**
Pin 15	Live
Pin 16	Neutral
Pin 17	Live lockout or residual heat signal
Pin 18	Remote Unlock
Pin 19	Neutral Unlock/Lockout Signal

Connector J2	Ignitor Live
Connector J3	Ignitor Neutral

Connector:	J4
Pin 11	Earth
Pin 12	Detection electrode n°1
Pin 13	Detection electrode n°2
Pin 14	Detection electrode n°3

Connector:	J5
Pin 8	Gas Valve Live
Pin 9	Not used
Pin 10	Gas Valve Neutral

Connector:	J1
Pin 1	Led output signal
Pin 2	Selectors Neutral
Pin 3	Selector or heating demand on burner/fire 1
Pin 4	Selectors Neutral
Pin 5	Selector or heat request on burner/fire 2
Pin 6	Selectors Neutral
Pin 7	Selector or heat request on burner/fire 3

The use of non-reversible connectors with a different number of poles makes the connection easy and reliable. Strain relieves, sufficient earth terminals and neutral terminals should be available in the appliance or in external connection boxes

INSTALLATION INSTRUCTIONS

- The control box is designed to stay in running position for less than 24h (system for non-permanent operation). Reaching this limit causes a safety shutdown to allow the device to check its efficiency.
- This automatic control is a safety device and it must not be modified by the user. The manufacturer's responsibility and guarantee are invalidated if the control is incautiously modified or illegally broken.
- Connect and disconnect the control box only after switching off the power supply.
- The device can be mounted in all positions.
- All operations (installation, maintenance, etc.) must be carried out by a qualified technician.
- Before any connection operation, completely isolate the system from power supply (multi-pole disconnection). Place the system safely to avoid accidental switch-on and make sure there is no voltage. If the system is not switched off, there is a risk of electric shock.
- During and after any operation (installation, maintenance, etc.), make sure that the type, timing and code are the ones provided, that the wiring is in good condition and perform the safety check in the "COMMISSIONING NOTES"
- In the event of a fall or impact, the devices must not be started, as safety functions may be compromised even if no damage is visible to the outside.
- Faulty devices or damaged must be unplugged from power supply and cannot be used.
- Condensation, ice formation and liquids intake are not permitted.
- In order to optimize the controller duration it's preferable a quite low ventilation temperature.
- Make sure that the model (code, type and times) you are using is correct before installing or replacing the control.
- The gas appliance on which the control box is installed must provide adequate protection against the risk of electrical shock (at least IP20).
- EMC emission requirements, according to the directive EN55014-1, shall be tested after the incorporation of the control box into the equipment.
- burner controls has a designed lifetime* of 250,000 burner startup cycles which, under normal operating conditions in heating mode, correspond to approx. 10 years of usage (starting from the production date given on the type field). This lifetime is based on the endurance tests in the standard EN 298. A summary of the conditions has been published by the European Control Manufacturers Association (Afecor) (www.afecor.org). The designed lifetime is based on use of the burner control according to the manufacturer's technical notes. After reaching the designed lifetime in terms of the number of burner startup cycles, or the respective time of usage, the burner control has to be replaced by authorized personnel.

* The designed lifetime is not the warranty time specified in the Terms of Delivery

COMMISSIONING NOTES

When commissioning the plant or when doing maintenance work, make the following safety checks:

Safety check to be carried out	Anticipated response
Burner startup without fuel supply	Lockout at the end of safety time (TS)
Burner operation with simulated loss of flame. For that purpose, close the fuel supply during operation and leave it in this state.	Immediate lockout (or with recycle with V option).

ELECTRICAL INSTALLATION

- The applicable national regulation and European standards (Ex. EN 60335-1 and EN 60335-2-102) related to the electrical safety must be respected;
- For safety reasons the solenoid valve connections (terminals 8 and 10) must be respected.
- Before starting the system check the cables carefully. Wrong connections can damage the control unit and compromise safety.
- The earth terminal of the control box, the metal frame of the gas burner and the earth on the mains supply must be well connected.
- Avoid putting the detection cable close to power or ignition cables.
- Use a heat resistant cable for the detection probe, well insulated to the ground and protected from possible moisture (or water in general).
- This device is equipped with internal fuses, but it must be protected by a fuse at least on the line connection (see technical data).
- In case of "partial" short circuits or bad insulation between live and earth the voltage on the detection electrode can be reduced until it causes the lockout of the control, due to the impossibility of detecting the flame signal.

CHECKING AT START

Always check the control box before the first start and also after any substitutions or a long period of non-operation of the system. Before any ignition attempt make sure that the combustion chamber is free from gas. Then make sure that:

- if the starting attempt occurs without gas supply the control performs a lockout after safety time (TS);
- when stopping the gas flow while the control is in running state the power supply to the gas valve is interrupted within 1 second, and the control box proceeds to a lockout after a recycle (or more than one up to 10 depending on settings);
- Operating times and cycle are in compliance with the ones declared for the used controller type;
- the level of the flame signal is sufficient;
- the ignition electrode(s) is (are) adjusted in the most stable way for a 2 – 4 mm spark gap;
- the intervention of limiters or safety devices causes a safety shutdown according to the application.

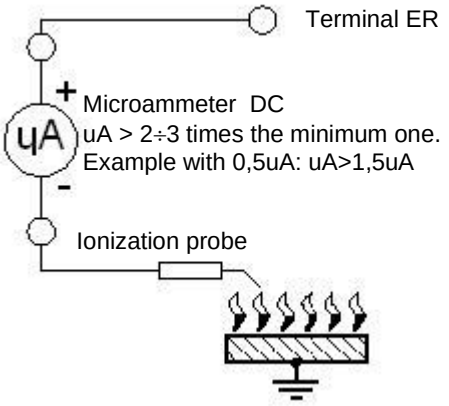

NOTES FOR THE DISPOSAL OPERATION

The controller contains electronic components and it must not be disposed of as a domestic waste. For the disposal operation refer to the local rules concerning special waste.

STANDARD OPERATION CYCLE

This description is related to the standard operating cycle controllers ECM113: When all the three external selectors (monitoring or heating demand of burners) are in OFF position and the control box is power supplied, the valve and igniter are de-energized. The control box is able to read the ignition request through the selectors; in fact, the cycle begins when one or more of the three selectors is activated. At every start-up sequence the control box proceeds to a self-checking of its own components. During the waiting time (TW) the internal logic makes a test of the three flame signal amplifiers. A parasite flame signal or a failure of one or more amplifiers, which corresponds to the flame condition, prevents the control system from starting. At the end of waiting time (TW) the solenoid valve is energised and the ignition device is activated, so the safety time (TS) begins. If the control box detects the flame, of all the active selectors, then at the end of safety time the ignition device is de-energized and so the combustion starts. The combustion ends only if all selectors are back to idle position. If at the end of safety time (TS) the control system doesn't detect the flame, on all active selectors, then non-volatile lockout occurs, so the solenoid valve is closed, the ignition device is inhibited and the lockout signal is energized. At the end of safety time (TS) the control box makes a self-test of all inactive flames, if any of these flames are detected, then the internal logic proceeds to non-volatile lockout, so the solenoid valve is closed, the ignition device inhibited and the lockout signal is energized. If the control box is provided with multiple recycle attempts and at the end of the first safety time TS no flame signal is detected (or the self-test, of all inactive selectors flames, has not succeeded), then the control proceeds to a safety shut-down and the inter-waiting time begins; at the end of the inter-waiting time the TW/TS cycle is repeated.

See the attached operating cycle diagram (figure 6) to better understand the controller operation

operation cycle variations (see fig.3):

The possible variations of the controllers operation cycle are as follows:

- Option Vnn (5) Flame failure in running position

Standard mode: recycle without lockout (no limit). On request, with Vnn option; the device performs "nn" number of re-ignition attempts due to flame failure in running position (See the "TECHNICAL DATA" paragraph to set the number of recycle attempts).

- Option J (9) Pre-ignition

Standard mode: without pre-ignition. On request; with Jnn option, it is possible to set the pre-ignition time to activate the ignition transformer "nn" seconds before the safety time TS. (see the "TECHNICAL DATA" paragraph for settable time information)

- Option K (10) Lockout due to parasite flame

Standard mode: the cycle stops without lockout condition (no limit, continuous waiting stage). On request, with "Knn" option; if the device detects parasite flame during waiting or pre-ignition time, then it goes to immediate lockout ("K" Option) or with a delay (settable upon request) of nn seconds ("Knn" Option). (see the "TECHNICAL DATA" paragraph for settable time information)

- Option Y (11) Recycle attempts

Standard mode: the device proceeds to immediate lockout (without recycle) if the flame isn't detected at the end of safety time TS. On request, with Ynn option; the device proceeds to lockout after "nn" recycle attempts (see the "TECHNICAL DATA" paragraph for attempts number settable upon request).

- Option I (12) Inter-waiting time

Standard mode: inter-waiting time is equal to waiting time. On request; with "Inn" option, it is possible to set inter-purge time of nn seconds during the recycles (only in combination with "Ynn" Option, see the "TECHNICAL DATA" paragraph for settable time information)

- Option Q (13) Starting mode

Standard mode: with heating demand, the ignition occurs after waiting time TW. On request, with Qnn option; it is possible to set a waiting time (Tq) for the next cycles which equals TW (see the "TECHNICAL DATA" paragraph for settable time information)

- Option D (14) Overheat protection of the ignition transformer

Standard mode: without protection. On request, with Dnn option; the ignition attempts can be restricted in an interval time Tb of nn minutes.

See the attached operating cycle diagram (figure 3) to better understand the operation cycle variations

OPERATION CYCLE WITH X OPTION

This description is related to the controller operation cycle with X option, or rather multi burner with indirect manual manipulation commands: When all the three external selectors (monitoring or heating demand of burners) are in OFF position and the controller is power supplied; the solenoid valve and igniter are de-energized and all LEDs (LDn) are shut off. The control box is able to read the ignition request through the selectors; in fact, the cycle begins when one or more of the three selectors is activated. At every start-up sequence the control box proceeds to a self-checking of its own components. During the waiting time (TW) the internal logic makes a test of the three flame signal amplifiers circuit. A parasite flame signal or a failure of one or more amplifiers, which corresponds to the same condition, prevents the control box from starting. At the end of waiting time (TW) the solenoid valve is energised and the ignition device is activated, so the safety time (TS) begins. If the control system detects the flame, the residual heat signal (SCR) is energized and at the end of safety time the ignition device is deactivated and so the combustion starts. If at the end of safety time (TS) the control system doesn't detect the flame of all active selectors, then a non-volatile lockout occurs, so the solenoid valve is closed, the ignition device is inhibited and the lockout signal is activated (LED blinking). During the combustion the control system makes a self-test of all selectors, if the ignition energy is requested, then the device proceeds to a new ignition cycle, so the solenoid valve remains open (see fig.5) during the waiting time (TW), necessary to make the test of the flame amplifier circuit, afterwards the ignition device is energized, so the safety time (TS) begins. The combustion ends only if the parasite flame is detected or if all selectors are back to idle position.

See the attached operating cycle diagram (figure 5) to better understand the controller operation

Operation cycle variations (see fig.6):

The possible variations of the controllers operation cycle with option X are as follows:

- Option Vnn (5) Flame failure in running position

Standard mode: recycle without lockout (no limit). On request, with Vnn option; the device performs nn number of re-ignitions on flame failure in running position (see the "TECHNICAL DATA" paragraph to set the number of recycle attempts).

- Option K (10) Lockout due to parasite flame

Standard mode: the cycle stops without lockout condition (no limit, continuous waiting stage). On request, with "Knn" option; if the device detects parasite flame during waiting or pre-ignition time, then it goes to an immediate lockout ("K" Option) or with a delay (settable upon request) of nn seconds ("Knn" Option). (see the "TECHNICAL DATA" paragraph for settable time information)

- Option Q (13) Residual heat signal

Standard mode: the residual heat signal is activated when the flame is detected and deactivated after a delay of 40 minutes. On request, with Qnn option; it is possible to set a delay time (Tq) of nn minutes

See the attached operating cycle diagram (figure 6) to better understand the operating cycle variations

SIGNALS DURING OPERATION

The following description refers to the controller with standard cycle. In the various operation conditions the device is able to signal the operation state through a LED, The legend is as follows:

STATE	Led Output	Description
Pre-purge	1 flash every 2 seconds	Burner 1 with parasite flame.
	2 flashes every 2 seconds	Burner 2 with parasite flame.
	3 flashes every 2 seconds	Burner 3 with parasite flame.
	Always off	No parasite flame.
Ignition	Always on	Flame on burners activated with the selectors.
	Always off	No flame on one o more burners activated with the selectors.
Combustion	Always on	Flame on burners activated with the selectors.

In case of two or more simultaneous parasite flames, the device displays with the following priorities: flame parasite on burner 1, 2 and lastly 3. For example, If the device detects the parasite flame on burners 2 and 3 simultaneously, then the LED output will blink twice every 2 seconds. Another example: If the device detects the parasite flame on burners 1 and 3, simultaneously, then the LED output will blink once every 2 seconds.

The following description refers to the controller with operation cycle with X option. In the various operation conditions the device is able to signal the operation state through a LED. The colours legend is as follows:

Led output	Description
Off	Waiting for heating demand
Steadily On	Heating demand without anomalies.
Blinks	Lockout or anomalies.

DIAGNOSTICS

If the device is in lockout condition and the reset button is pushed for about 5 seconds, then the diagnostic routine is activated and the system displays the reason of the lockout condition. When the same button is pushed again it resets the controller and thus the diagnostic routine ends. The following table shows the description of the diagnostic messages through the led blinking:

Blinks number every 2 sec.	Description
1, 2 or 3	Parasite Flame during the start-up respectively of burner 1, 2 or 3.
4, 5 or 6	No flame at the end of safety time (TS) respectively of burner 1, 2 or 3.
7,8 or 9	Flame failure during operation respectively of burner 1, 2 or 3.
11-13	Internal fault.

In the case of an absence of two or more flames simultaneously, the device displays with the following priorities: no flame on burner 1, 2 and lastly 3. For example: If the device doesn't detect the flame on burner 2 and 3 simultaneously, then the output led will blink 5 times (corresponding to burner 2) with a 2 second pause. Another example: If the device doesn't detect the flame on burner 1 and 3 simultaneously, then the output led will blink 4 times (corresponding to burner 1) with a 2 second pause.

CONTROLLER RESET

Non-volatile lockout (standard manual reset)

When the controller goes to non-volatile lockout, in order to reset it, the reset button must be pushed until the lockout signal is shut off (about 2 seconds).

Non-volatile lockout (manual reset with X option)

When the controller goes to non-volatile lockout, in order to reset it all external selectors must be in the same OFF position for at least 2 seconds, if this time is not respected, then it is not possible to unlock the system.

Volatile lockout (electrical reset)

In case of volatile lockout the controller can be reset by interrupting and then restoring the power supply. It's not possible to reset the control box by shutting off the heating demand device (selectors).

CONTROLS DENOMINATION

Type Options
EC (1) (2) (3) (4) (5) (6) (7) (8) (9) (10) (11) (12) (13) (14) (15) (16) (17) (18)

Descrizione del modello

(1) **M o E**: non-volatile lockout (M) or volatile lockout(E)
(2) **1**: without combustion fan(1)
(3) **1**: direct ignition of burner/ no pilot flame(1)
(4) **3**: multi-burner with maximum three flame signals monitoring (3)

Options description (see also paragraphs “Operation cycle variation” and “technical data”)

(5) Ignition mode:
- **No letter:** ignition spark remains during all safety time TSP=(TS-1). Standard mode.
- **A:** ignition spark remains during all all safety time TSP=TS.
- **B:** ignition spark is switched off when flame is detected in all active burners, without delay.
- **Bnn:** ignition spark is switched off when flame presence is detected in all active burners, with delay of nn seconds.

(6) Flame failure in running position:
- **No letter:** recycle, without lockout (no limit). Standard mode.
- **V:** lockout condition without delay.
- **Vnn:** lockout after “nn” recycle attempts.

Remark: The maximum attempts number of the devices with X option (hobs) is 2

(7) Connection to the mains supply:
- **No letter:** Live-neutral polarized (phase-sensitive controller). Standard mode.
- **N:** Not polarized (phase-insensitive controller).

(8) Valve power supply:
- **No letter:** alternating (supply voltage). Standard mode.
- **C:** direct (rectified supply voltage).

(9) Preignition:
- **No letter:** without pre-ignition. Standard mode.
- **Jnn:** with settable pre-ignition (Tj) of nn seconds (see paragraph “TECHNICAL DATA”)

(10) Lockout due to parasite flame:
- **No letter:** the cycle stops, without lockout (no limit, continues pre-purge stage). Standard mode.
- **K:** lockout without delay.
- **Knn:** lockout with delay of nn seconds (Tk).

(11) Recycle attempts:
- **No letter:** lockout without recycle. Standard mode.
- **Ynn:** lockout after “nn” recycle attempts.

Remark: Option not available in controllers with X option (hobs).

(12) Inter-waiting time:
- **No letter:** inter-waiting time is equal to waiting time (Ti equal to TW). Standard mode.
- **Inn:** inter-waiting time (Ti differs from TW) settable upon request

Remark: Option not available in controllers with X option (hobs).

(13) Starting mode (without X option):
- **No letter:** start-up with waiting time TW. Standard mode.
- **Qnn:** quick start with waiting time of nn seconds (Tq);

Remark: The devices with "Qnn" option are designed for special applications that require an immediate ignition (waiting time is reduced comparing to the first ignition). Option not available in controllers with X option (hobs).

(14) Heat residual signal (with X option):
- **No letter:** shutdown with a delay of 40 minutes. Standard mode.
- **Qnn:** shutdown with a delay of nn minutes;

(15) Overheat protection of the ignition transformer:
- **No letter:** without protection. Standard mode.
- **Dnn:** the ignitions number is limited in a time interval of nn minutes

Remark: Option not available in controllers with X option (hobs).

(16) Protection of lockout output
- **No letter:** without protection. Standard mode.
- **R:** with protection.

Remark: A resistor protects the lockout output against the reversal of its connections. The maximum load of the devices with R option is limited.

ПРОМЭЛЕКТРОНИКА / sales@prom-elec.com

(17) **Duty cycle:**

No letter: multi-burner. Standard mode.

X: multi-burner (hobs) with indirect manual manipulation;

(18) **Filtering:**

No letter: filtering with compensated coil. Standard mode.

F: filtering with resistors;

Remark: The devices with "F" option are designed for special applications. In this case the maximum load on the igniter output is limited to 10VA (about 50mA).

Example:**ECM113 A N K3 Y3 I7** ⇨ The features of this device are:

M: non–volatile lockout (M)
1: Without combustion fan
1: direct ignition of burner without pilot flame
3: multi-burner with maximum three flame signals monitoring
A: ignition spark remains during all safety time TSP=TS.
N: Not polarized (phase-insensitive controller).
K3: lockout with delay of 3 seconds
Y3: device with 3 recycle attempts.
I7: 7 second Inter-waiting time.

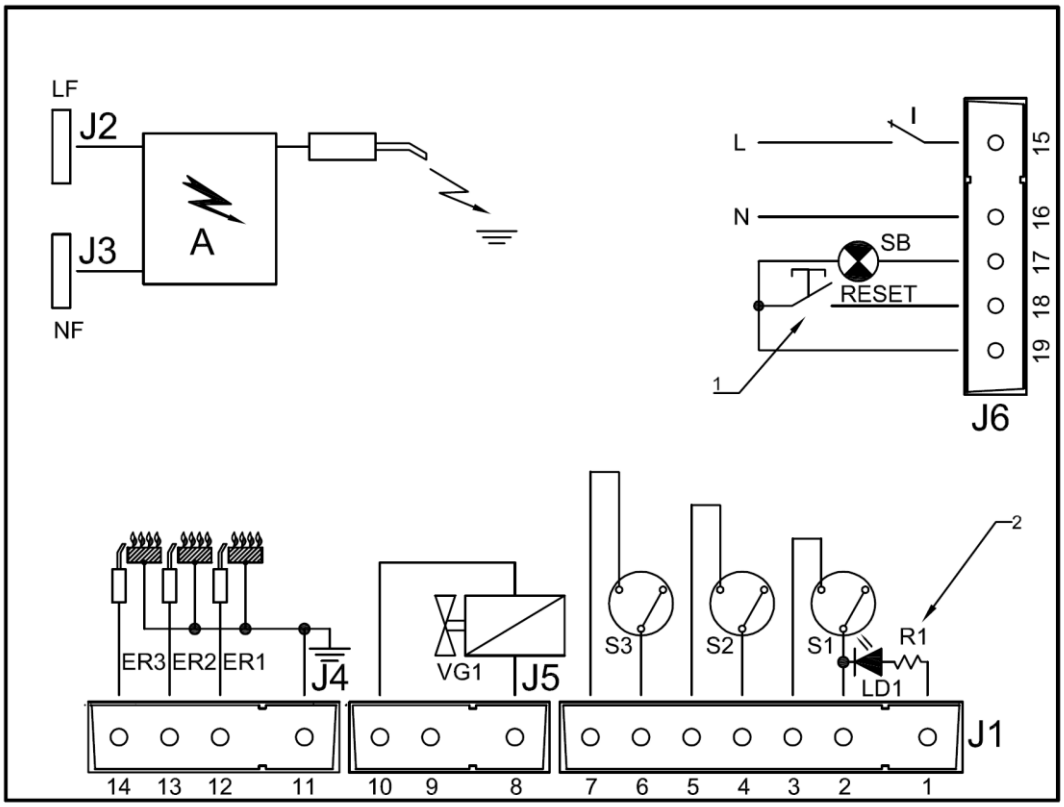

NOTES:

1 In ECE113 types the RESET buttoni s not wired

2 2 LD1: LED signal (optional) and R1: Calibration resistor (flame proof) of LED brightness (optional)

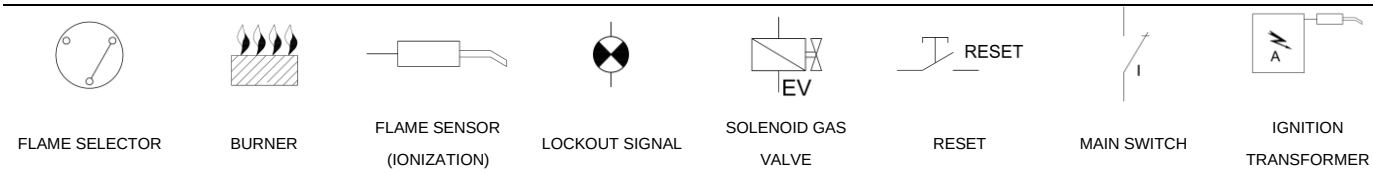

Figure 1. Connection diagram with standard operation cycle

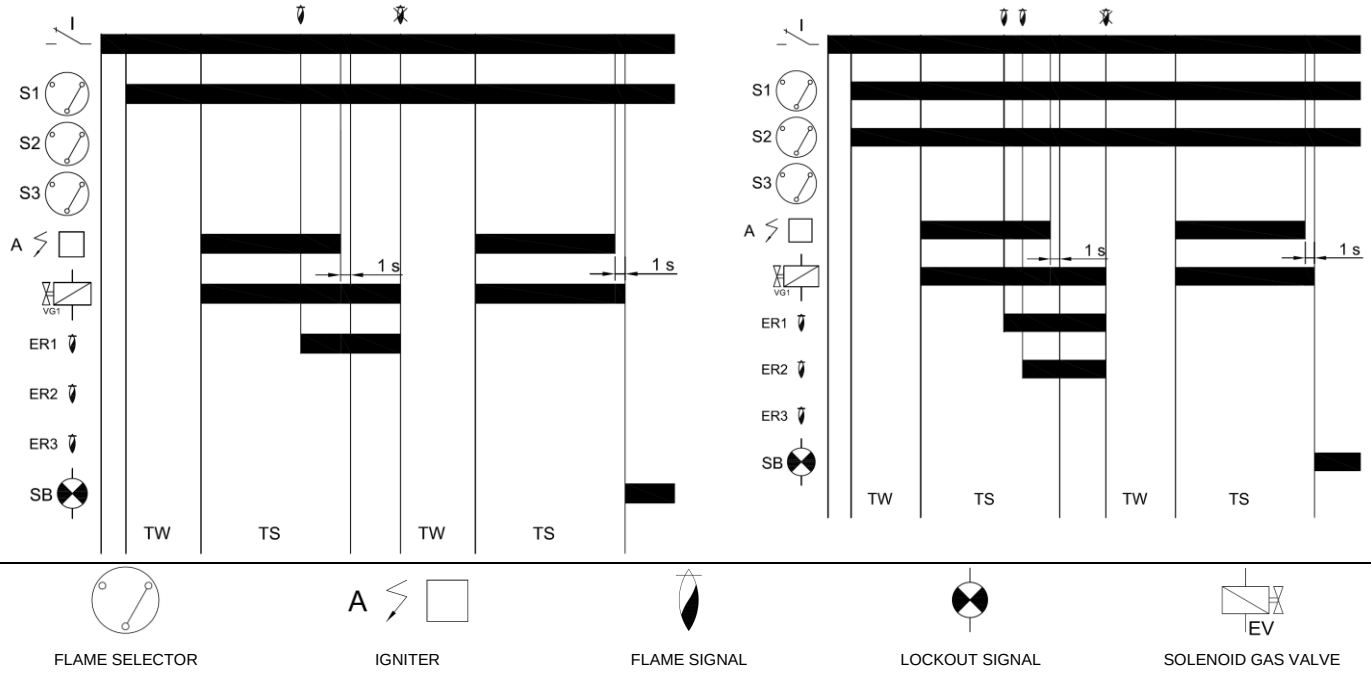

Figure 2. Diagrams of standard operation cycle

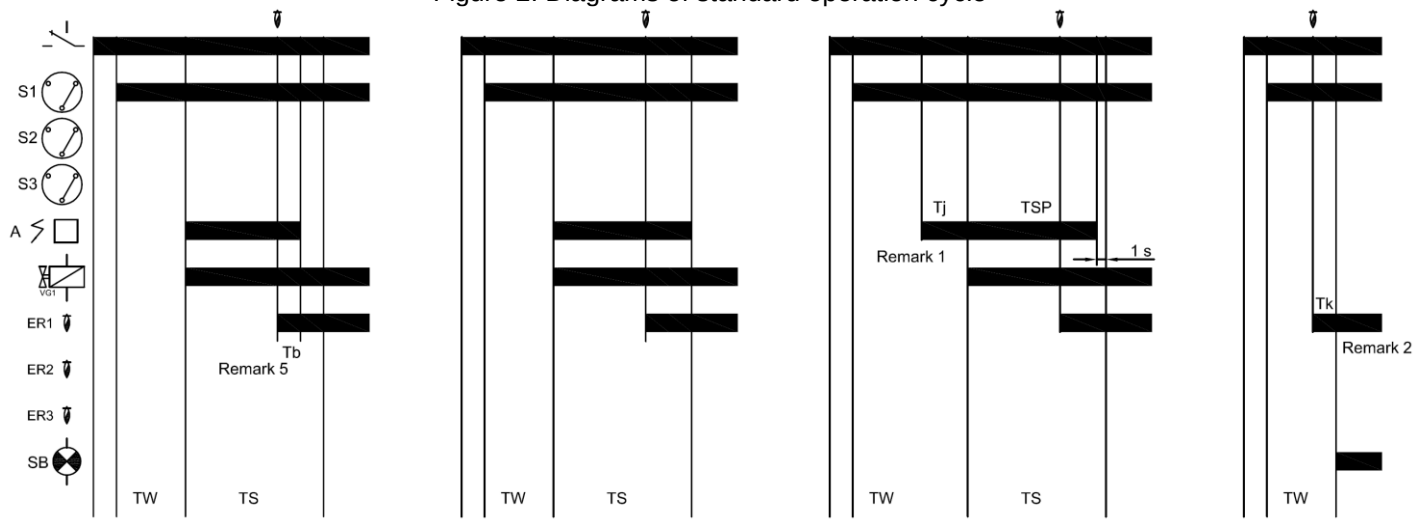

OPTIONS B and Bnn **OPTION A** **OPTION Jnn** **OPTION Knn**

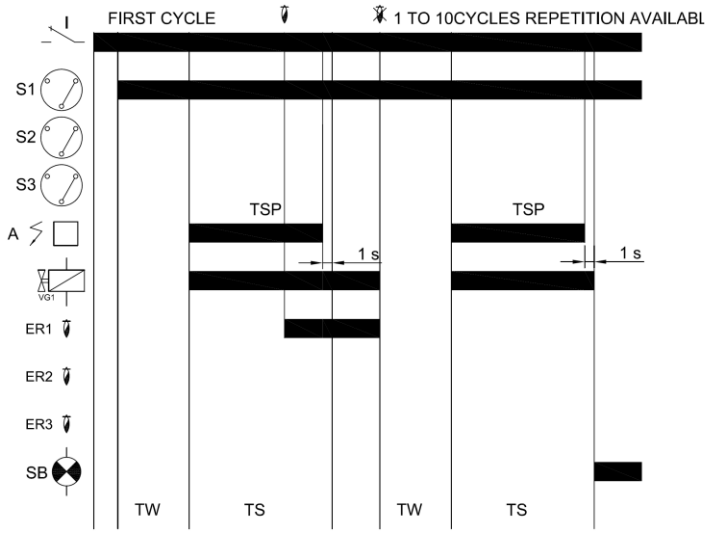

OPTION Vnn

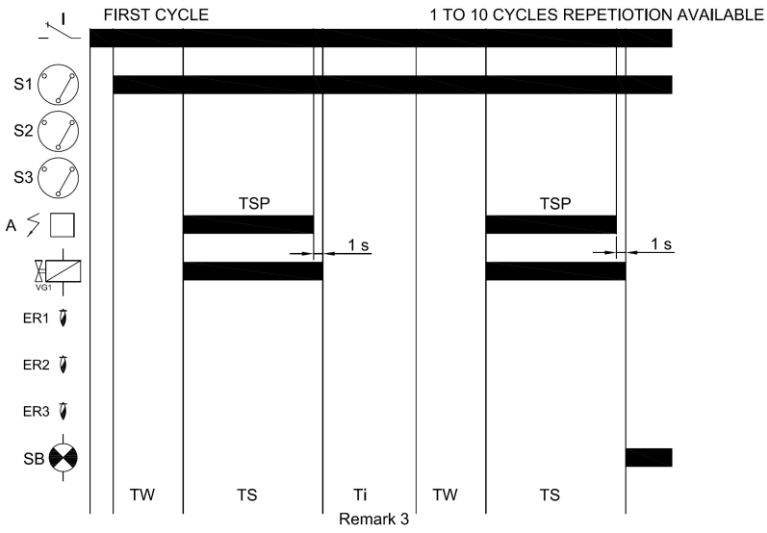

OPTIONS Ynn e Inn

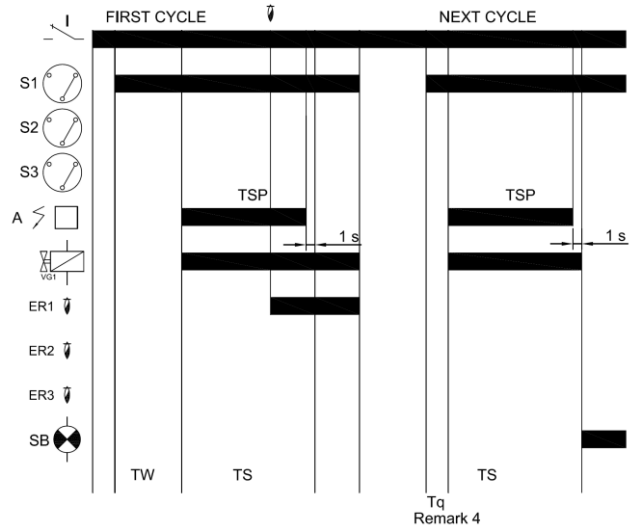

OPTION Qnn

STANDARD CYCLE REMARKS:

1. Pre-ignition time Tj=nn sec. available.
2. Lockout due to parasite flame with delay of Tk=nn sec.
3. Inter-waiting time available. The waiting time TW between recycle attempts can be replaced by inter-waiting time only if this sequence is allowed in the final application.
4. At heating demand, after a pause equal to the waiting time TW, immediate ignition is carried out after the waiting time Tq.
5. Tb: Igniter shut-off delay time after flame detection (Tb=0 with B option).

Figure 3. Diagrams of options available for standard operation cycle

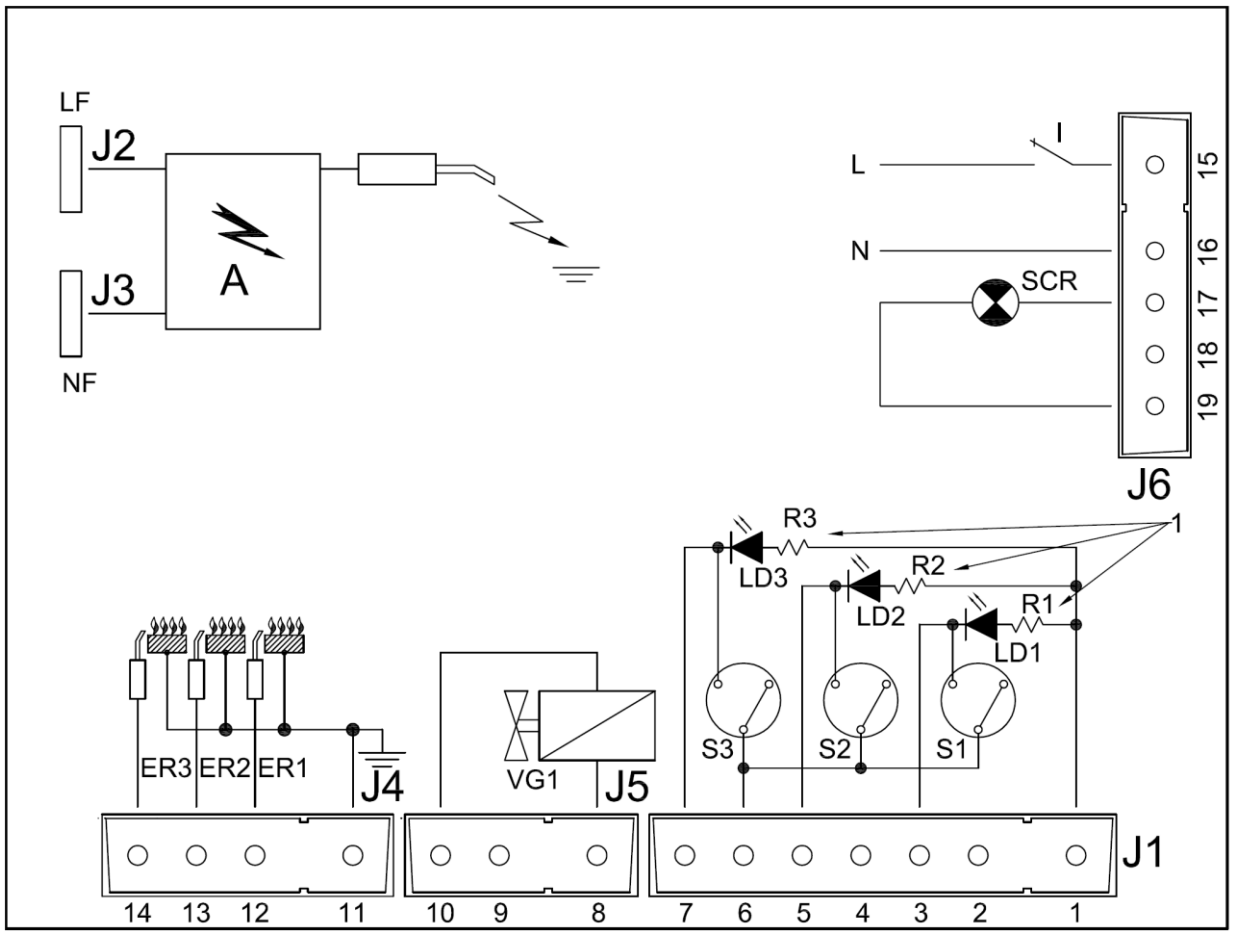

Note1: LD1, LD2, LD3 LED signals (optionals) and R1, R2, R3 Calibration resistors (flame proof type) of LED brightness (optionals)

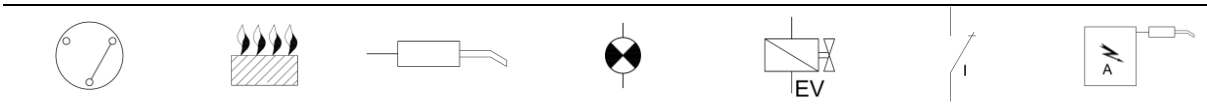

Figure 4. Connection diagram of operation cycle with X option

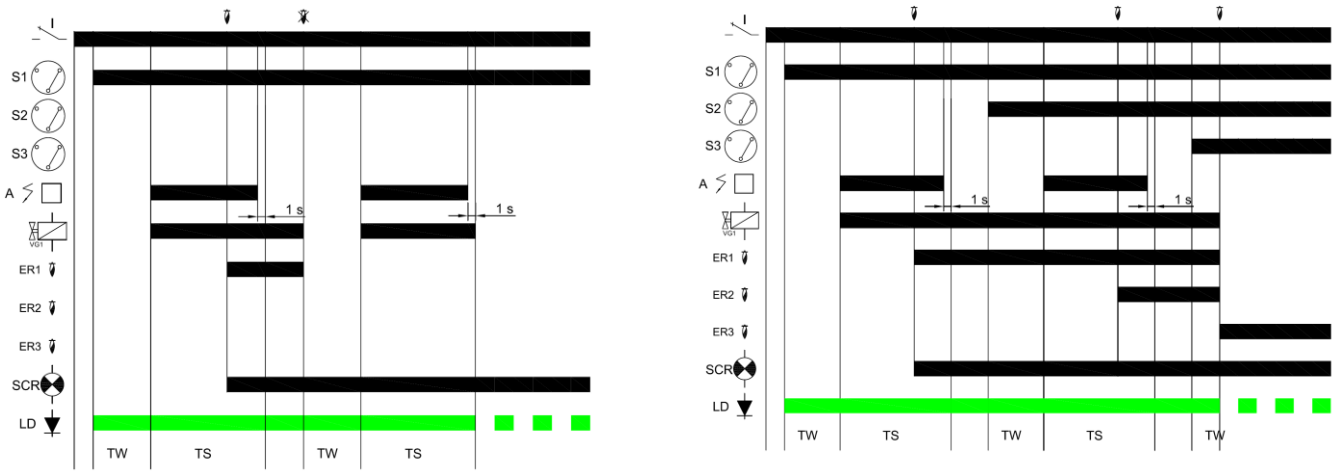

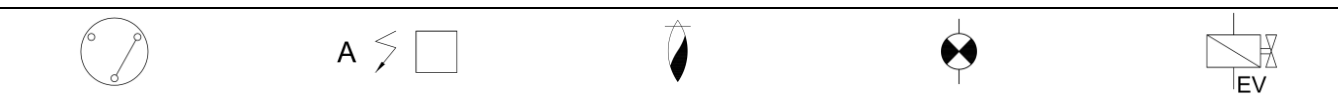

Figure 5. Diagrams of operation cycle with X option

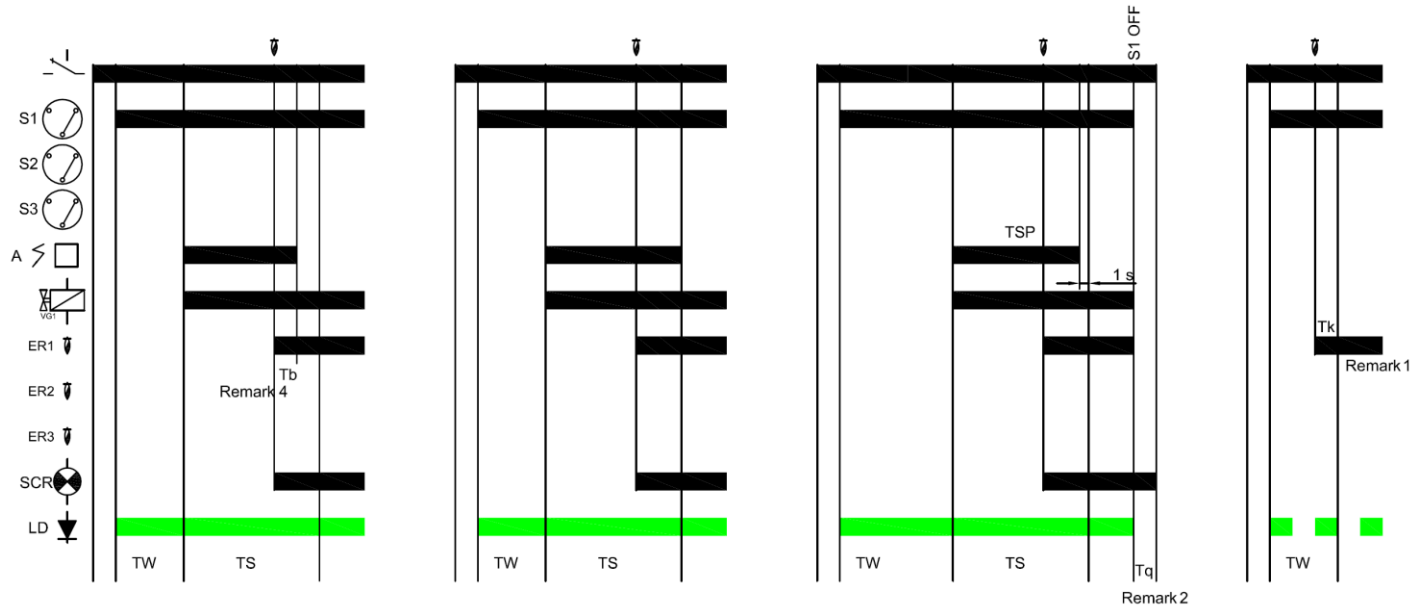

OPTIONS B and Bnn **OPTION A** **OPTION Qnn** **OPTION Knn**

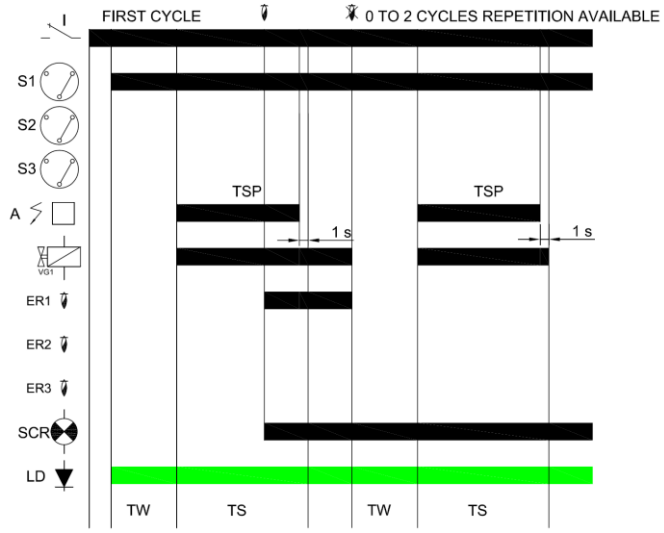

OPTION Vnn

Figure 6. Diagrams of options available for operation cycle with X option

REMARKS ABOUT OPERATION CYCLE WITH X OPTION:

1. Lockout due to parasite flame with delay of Tk=nn sec.
2. Without heating demand, after a delay equal to the waiting time Tq, residual heat signal SCR is shut off
3. TW: waiting time to check the parasite flame. During this step the shut-off valve is open.
4. Tb: Igniter shut-off delay time after flame detection (Tb=0 with B option).

ATTTENTION ->Company Brahma S.p.A. declines any responsibility for any damage resulting from the Customer's interfering with the device.

BRAHMA S.p.A.
Via del Pontiere, 31/32
37045 Legnago (VR) - ITALY
Tel. +39 0442 635211 - Telefax +39 0442 25683
http://www.brahma.it
E-mail : brahma@brahma.it

15 September 2022 Subject to amendments without notice