EUROBOX SERIES
TYPES CE... SE... ME...

AUTOMATIC GAS BURNER CONTROL SYSTEMS FOR GAS BURNERS AND GAS BURNING APPLIANCES WITH OR WITHOUT FAN

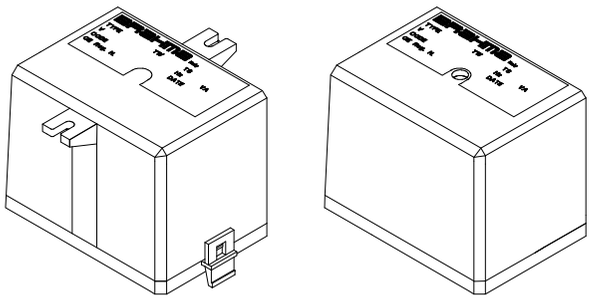

Application

This range of electronic gas burner control systems has been designed specifically for atmospheric and fan assisted burners for intermittent operation (systems for non-permanent operation).

All these controls are provided with volatile lock-out, which means that a restart from the safety shut-down condition can only be accomplished by an interruption of the main power and its subsequent restoration.

The automatic burner control units of this series are suitable for:

-combi boilers
-heating boilers
-warm air generators
-radiant heaters
-water heaters

Due to the design and the variety of models they can be used also for the automation of ovens, cookers and in general in gas firing installations with atmospheric burner.

Features

Table 1 shows the main features of this series. Other important features are:

- EC - Type certification (CE Reg. N° 63AQ0625) in accordance with Gas Appliance Directives 90/396 and 93/68;
- in accordance with EN298 (European standard for automatic gas burner control systems);
- flame monitoring by the rectification property of the flame: ionization;
- electrical service life at max. loading >250.000 operations;
- inbuilt ignition device completely of solid state design and high efficiency;
- auxiliary contact for low power ignition or main gas valve control for intermittent pilot systems (this contact is not isolated from the main supply voltage by reinforced isolation, therefore the relay contact is not suitable to supply SELV circuits - Safety Extra Low Voltage, e.g. 24V);
- different connections and fixings.

ПРОМЭЛЕКТРОНИКА / sales@prom-elec.com

TABLE 1	BURNER							
	single flame	dual flame	atmospheric without fan	atmospheric with fan	auxiliary contact (1)	single electrode	external igniter	classification code according to EN298 (2)
CE191	*		*					AMCVXN
SE191	*		*		*			AMCVXN
SE192		*	*					AMCVXN
CE391	*			*				AMCVXN
SE152		*	*					AMCVXN
SE592		*	*				*	AMCVXN
ME191	*		*			*		AMCVXN
ME192		*	*			*		AMCVXN

NOTE: (1) : This contact is not isolated from main supply voltage by reinforced isolation, therefore the relay contact is not suitable to supply SELV circuits - Safety Extra Low Voltage, e.g. 24V.
(2) : Flame failure during TS causes spark restoration

TECHNICAL DATA

Supply Voltage: 230V~ 50/60Hz
on request: 110/120V~ 50/60Hz
Operating temperature range: -20°C +60°C
Ambient humidity: 95% max at 40°C
Protection degree:
socket NG: IP 40 (after installation)
socket P/R IP 00
Times:
-Prepurge or waiting time **(TW):** 1,5/3/5/10/20/30/40 s
the waiting time for type SE152 is: 3/5/10/20/30/40 s
-Safety time **(TS):** 3/5/8/10/20/30/40/50/60 s
-Drop out time on running flame failure: < 1 s

The times given on the burner control label correspond to the values guaranteed. The actual values differ slightly from the values given, pre-purge and waiting times are in fact longer and safety time shorter than their nominal values.

Power consumption, at starting up:
atmospheric burner 10 VA
atmospheric fan-assisted burner 12 VA
Power consumption, running:
atmospheric burner 7 VA
atmospheric fan-assisted burner 9 VA
Contact rating: I max
-Thermostat: 4 A cos φ = 0.4
-EV1: 0.5 A cos φ = 0.4
-EV2: 0.5 A cos φ = 0.4
-EVG: 0.5 A cos φ = 0.4
-Fan: 1 A cos φ = 0.4
-Alarm: 0.5 A cos φ = 1
-Auxiliary contact: 0.5 A cos φ = 0.4
-External ignition: 1.5 A cos φ = 0.2
Max. length of the cables of external components: 1 m
Fuse rating internal: 4 A Fast
Fuse rating external: 3.15 A Fast
Flame control:

The ionization flame detector device makes use of the rectification property of the flame.

The ionization flame detector device is not a safe to touch output (no provision with protective impedances).

-Minimum ionization current: 1.2µA
on request: 0.5µA
-Recommended ionization current: 3 ÷ 5 times the minimum ionization current
-Max. length of the cable: 1 m
-Minimum insulation resistance of cable and flame detector device to earth: ≥ 50MΩ
-Max. parasitic capacitance of detection probe: ≤ 1nF
-Max. short circuit current: < 200µA AC
Ignition:
-Ignition voltage: 8 KV at 30pF loading
-Repetition rate: 25 Hz
-Max.length of the cable: 2 m
-Spark gap recommended: 2-4 mm
-Consumption: 2,5 VA
-Spark energy: 15 mJ
Weight:
-with socket P or R: 220 g
-with socket NG: 275 g
Controls for special applications:

On request it is possible to meet special requirements concerning times, repetition rate of the sparks, minimum ionization current and operating cycle.

CONSTRUCTION

The enclosure made of plastic material protects the control from mechanical damage, dust and dirt from the conditions of installation. The particular construction, consisting of four printed circuit boards in order to form a "box" structure, has allowed a reduction in the volume of the control unit.

A varistor protects the control from voltage transients on the mains supply. An internal fuse protects the relays of the control box in case of short circuits on the outputs (valves, fan and lock-out signal). This is not an accessible fuse and the control must be protected with a fuse of the fast blow type suitable to the load connected and never exceeding 3.15A.

Overall Dimensions

The control units of the EUROBOX series can be supplied with different executions of the enclosure depending on the fixing system required.

Enclosures can be provided with or without fixing brackets on the sides. Please note that the control units with fixing brackets on the sides can only fit connecting sockets type P or R, as these are provided with suitable hooks.
In the part reference the suffix describes the execution of the enclosure:

3 with fixing brackets
4 no fixing brackets

The following figure (fig. 1) shows the overall dimensions of the controls.

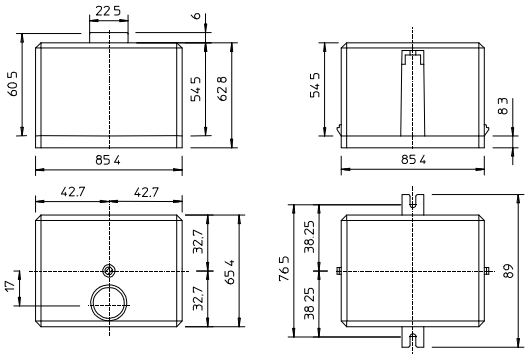

Fig.1

Accessories

Cable holders/core hitches can be fitted on the sides of the enclosures (see Fig.2).
These accessories can be supplied upon request.

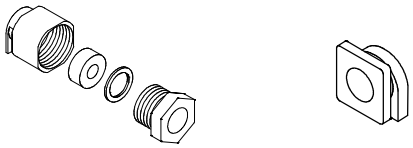

Fig.2

Connection

As regards the interconnection system, different solutions are possible; in fact, different types of connecting sockets can be used: type NG with a screw terminal board or type P and R for fast-on terminals.The slots on socket R are suitable for female fast-on terminals. Socket type P differentiates from type R on positions 8 and 10 for the presence of standard holes to suit female fast-on terminals of standard type (please see Fig. 3 and Fig. 4).
Regarding the connection of the control units, provisions such as strain reliefs, sufficient earth terminals and neutral terminals should be present in the appliance or in external connection boxes.

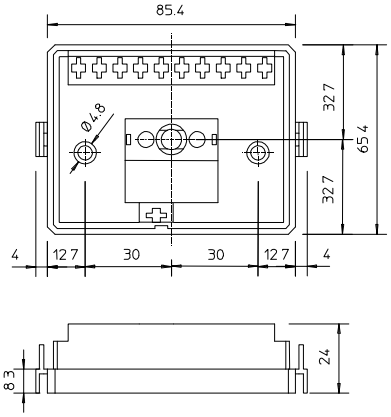

Socket R

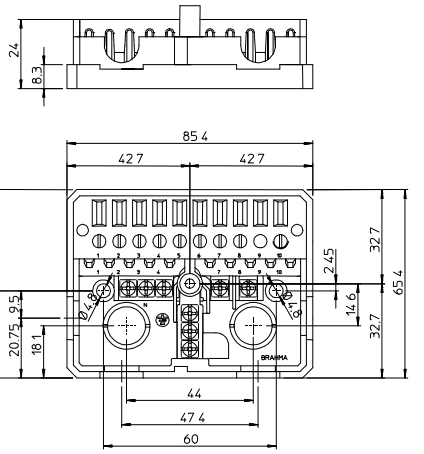

Socket NG
Fig.3

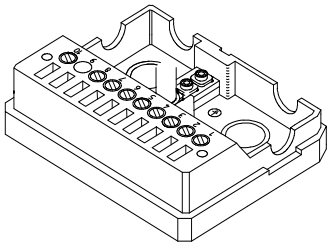

Socket NG

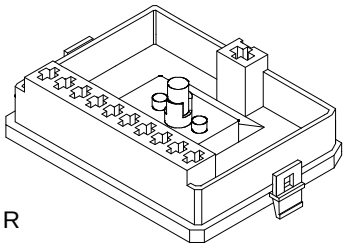

Socket R

Fig.4

DIRECTIONS FOR THE USE

- For technical-safety reasons a regulation shutdown must occur every 24 hours (systems for non-permanent operation).
- Automatic controls are safety devices and shall not be opened. Responsibility and guarantee of the manufacturer is invalidated if the control is opened.
- The control must be connected and disconnected only without the main power.
- The control can be mounted in any position.
- Avoid exposure of the control unit to dripping water.
- Ventilation and the lowest temperature ensures the longest life of the control.
- Make sure that the type (code and times) you are using is correct before installing or replacing the control.
- For controls which are specified as IP00, the gas appliance in which the control is installed must provide adequate protection against the risk of electrical shock (at least IP20).

Electrical installation

- The applicable National regulation and European standards (e.g. EN60335-1/prEN50165) regarding electrical safety must be respected.
- Live and neutral should be connected correctly, a mistake could cause a dangerous situation, i.e. the valves would still be live with the thermostats

and limits switched off. Besides, if live-neutral polarity is not respected the control performs a volatile lock-out at the end of the safety time at starting up.

- Before starting check the cables carefully. Wrong connections can damage the control and compromise the safety.
- The earth terminal of the control, the metal frame of the burner and the earth on the mains supply must be well connected.
- Avoid putting the detection cable close to power or ignition cables.
- Use a heat resistant cable for the detection probe, well insulated to ground and protected from possible moisture (or water in general).
- Use an ignition cable as short and straight as possible and keep it far from other conductors to reduce the emission of electromagnetic interference (max.length <2m and insulation voltage >25KV).

In case of live-neutral network with unearthed neutral or live-live network (with centre of the star not earthed) the control can operate correctly by means of a built-in resistor.

IMPORTANT: in the event of "partial" short circuits or bad insulation between phase(s) and earth the voltage on the ionization probe can be reduced until it causes the lock-out of the control. In the presence of this kind of network it is advisable to use our isolation transformer type AR1.

Checking at start

Always check the control before the first start and also after substitutions or a long period of non operation of the system. Before any ignition attempt make sure that the combustion chamber is free from gas.

Then make sure that:

- if the attempt to start occurs without the gas supply the control performs a volatile lock-out after TS;
- when stopping the gas flow (while the control is in running state) supply to the gas valve is interrupted within 1 second and after a recycling, the control proceeds to a volatile lock-out;
- operating times and sequence are suitable;
- the level of the flame signal is sufficient, see Fig.6 for the measuring test;
- the ignition probe(s) is (are) adjusted in the most stable way for a spark gap between 2-4 mm;
- the intervention of limiters or safety devices causes a safety shut-down according to the application.

Operation

At every start the control unit proceeds to a self-checking of its own components. During the pre-purge or waiting time the internal circuit makes a test of the flame signal amplifier circuit. A parasitic flame signal or fault in the amplifier prevents the control from starting.

In the types with control of the fan, before the elapsing of pre-purge time, the air pressure switch contacts are checked to prove their "no air flow" state. Only if the test is positive the fan is started and with the air pressure switch in "air flow" state, pre-purge time begins.

At the end of the waiting or pre-purge times the gas valve is energized and the ignition device is operated. If a flame is detected during the safety time the ignition device is inhibited and, in the suitable models, the independent auxiliary contact will switch from off to flame detected position or the second gas valve will be energized.

On the contrary, if the control doesn't detect a flame by the end of TS, it proceeds to volatile lock-out, the gas valve and the ignition device are switched off while the lock-out signal output is supplied.

When the flame fails during the safety time, then the ignition device is activated within one second.

The attached diagrams are useful to understand how each control operates.

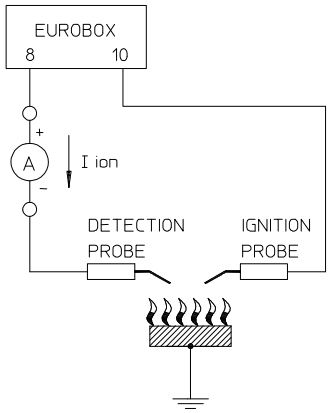

Fig.6

Reset of the control

The restart from the safety shut-down condition can only be accomplished by an interruption of the main power and its subsequent restoration.

These types of burner control units do not contain an independent manual reset function. The application of these types of controls is therefore restricted to only those appliances where resetting by switching off the heat demand is allowed by European standards.

In general, resetting of the appliance must occur in sight and in the near vicinity of the appliance. Resetting must also occur by means of a conscious manual action and not by means of automatic device like thermostats or timers.

Please note that it is allowed to combine the reset button together with the main switch on the appliance. In this case the alarm light will have to be installed too.

CONNECTION DIAGRAMS

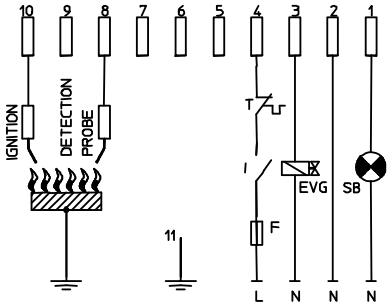

TYPE CE191

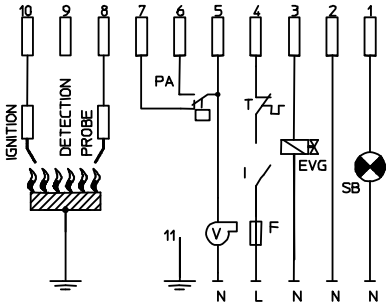

TYPE CE391

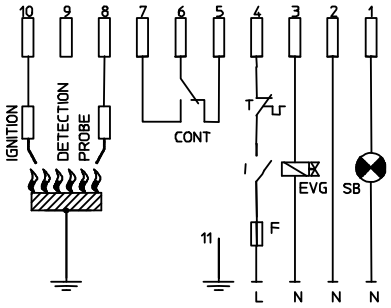

TYPE SE191

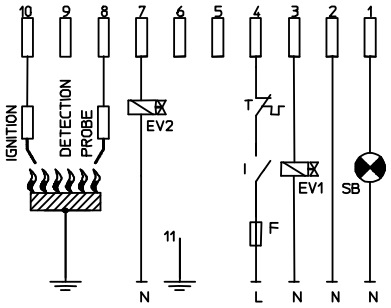

TYPE SE192 SE152

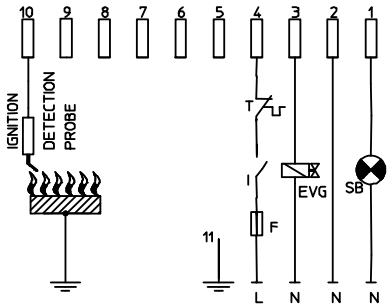

TYPE ME191

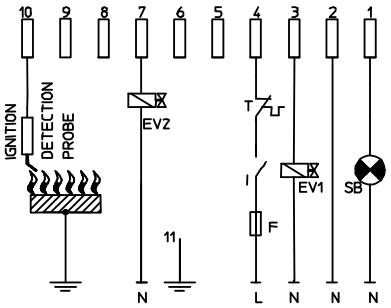

TYPE ME192

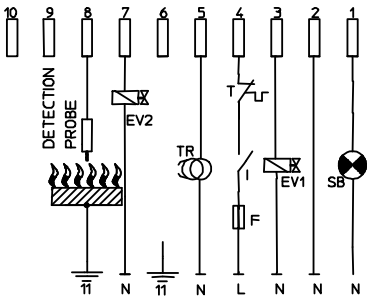

TYPE SE592

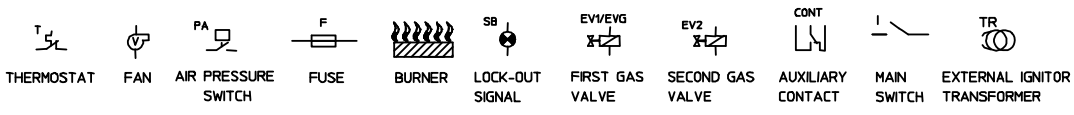

NOTE: the limit thermostat has to be wired in series to the live.

OPERATING CYCLES

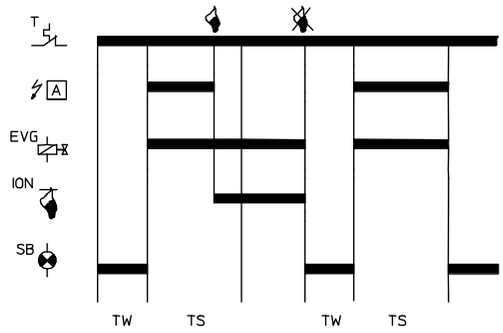

TYPE CE191 ME191

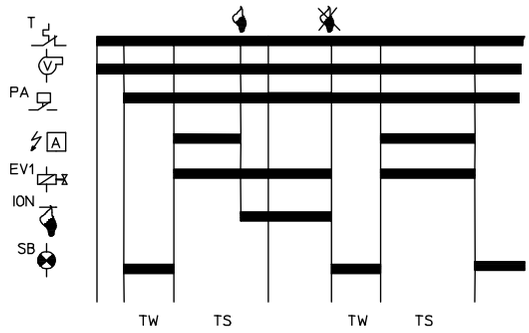

TYPE CE391

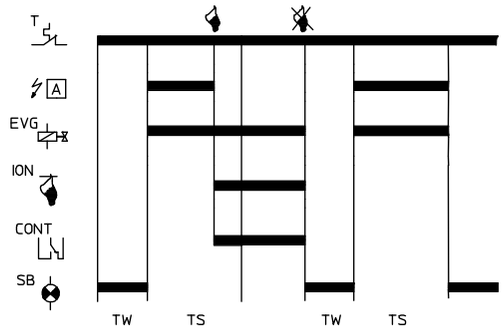

TYPE SE191

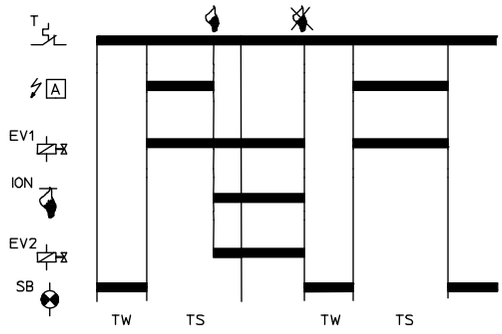

TYPE SE192 ME192

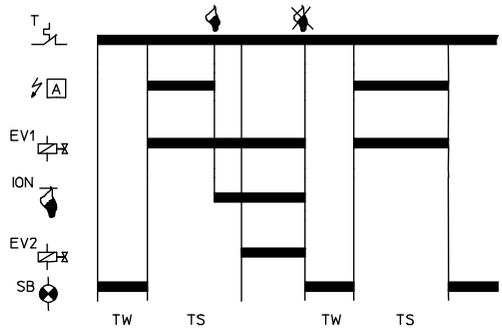

TYPE SE152

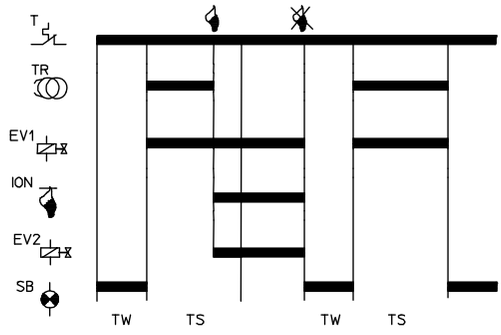

TYPE SE592

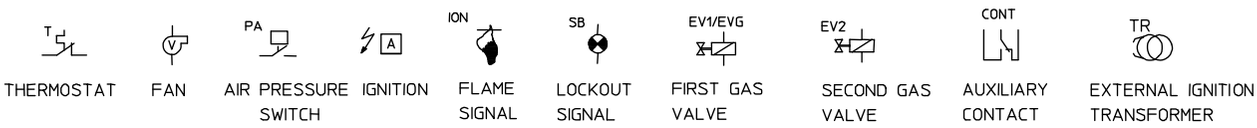

ATTENTION -> Company Brahma S.p.A. takes no responsibility for any damage resulting from Customer's tampering with the device.

BRAHMA S.p.A.
Via del Pontiere, 31
37045 Legnago (VR) – ITALY
Tel. +39 0442 635211 – Fax +39 0442 25683
http://www.brahma.it
E-mail: brahma@brahma.it

2011/06/07 subject to amendments without notice

ПРОМЭЛЕКТРОНИКА / sales@prom-elec.com