DUNGS®
Combustion Controls

Manual
MPA 5111

Old documentation - Only for your information!
Product is not available anymore!

Edition: 02.14

GB



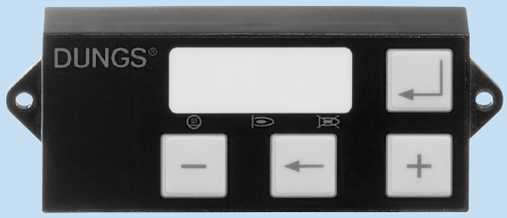

Nr. 254 722 - GB

ПРОМЭЛЕКТРОНИКА / sales@prom-elec.com

Old documentation - Only for your information!
Product is not available anymore!

Printed in Germany • Edition 02.14 • Nr. 254 722

Table of Contents

1 Short description 4

2 Accessories 4

3 Classification according to EN298 4

4 Approvals 4

5. Technical data 5

5.1 General information 5
5.2 Outputs 5
5.3 Inputs 6
5.4 Extension module 6

6 Connection diagram 7

7 Description of the behaviour 9

7.1 Unlocking function 9
7.2 Special operating modes 9
7.2.1 Operation without valve testing system (VPS) 9
7.2.2 Operation with valve testing system 9
7.2.3 Operation with reduced pre-aeration time 14
7.2.4 Operation with ignition gas flame 14
7.3. Special setting options 14
7.3.1 Different types of the air pressure detector monitoring 14
7.3.2 Different types of the temperature controller default or heat request 14
7.3.1 Different types of the modulation degree default 14
7.3.4 Waiting program with open safety chain or lack of gas on the GDWVPS 14
7.5 State description 15

8 Parameters 19

8.1 P1x General parameters 19

8.2 P2x - Fan 23

8.3 P3x Stepped motor 26
8.4 P4x - VPS 28
8.5 P5x - Additional valve 29
8.6 P6x - Startup 30
8.7 P7x - Operation 31
8.8 P8x - Switch-off 33
8.9 P9x - Waiting program 34
8.10 Internal parameters 35
8.11 Parameter record and stick for continuous run 36

9 Curve settings/modulation degree 37

9.1. Stick and VisionBox 37
9.2 Definition of terms 38
9.2.1 Burner capacity 38
9.2.2 Modulation degree 38
9.2.3 Curve point 38
9.2.4. Special point 38

10 Error overview 39

10.1 Errors from processor 2 39

10.2 Error from the basic system (0x01 to 0x3F) 39

10.3 Error from the extended functions (0x40 to 0x9F) 40
10.4 Error from the application (from 0xA0) 41

11 Display unit 43

11.1 Overview display modes 43
11.2 Key assignment MPA 5111 and MPA 5112 44
11.4 Operational status display MPA5111 45
11.6 Error display 46

Old documentation - Only for your information!
Product is not available anymore!

Printed in Germany • Edition 02.14 • Nr. 254 722

11.7 Information display 47
11.8 Service display 48
11.9 Parameterisation display 49
11.9 Parameterisation display 50
11.10 Reset display 51
11.11 Error memory display 53
11.12 Password entry parameter record stick 54

12 VisionBox 55

13 Flame detector 56

14 Stepped motor 57
14.1 Overview of the possible stepped motor types 57
14.2 Reference point "Standard" 57
14.3 Reference point "Exchanged" 57
14.4 Mathematical angle positions 58
14.5 Wiring diagram SAD15Power supply 59
14.6 Power supply of the stepped motors 60

15 Time diagram 62-63

Appendix

Appendix A Versions and variants
Appendix B Parameter overview

Old documentation - Only for your information!
Product is not available anymore!

Printed in Germany • Edition 02.14 • Nr. 254 722

1 Short description

Microprocessor-controlled burner control system for intermittent operation or continuous operation for controlling and monitoring pneumatically modulating fan-assisted gas burners with speed-regulated or controlled fan and power controller input.

Extension modules for:
- analogue inputs/outputs
- Stepped motor
- Continuous operation

2 Accessories

- MPA-Extension module / Parameter record-Stick
- Flame monitoring system
- Display unit
- VisionBox

3 Classification according to EN298

According to the programming, the following classifications are possible:

- FBLLBB
- FBCLBB
- FMLLBB
- FMCLBB

4 Approvals

EC-type examination certificate according to EC-gas appliances directive

CE number: CE 0085 BT 0056

Old documentation - Only for your information!
Product is not available anymore!

Printed in Germany • Edition 02.14 • Nr. 254 722

5. Technical data

5.1 General information		
Rated voltage	230 V AC -15 % ... +10 %	
Frequency	50 ... 60 Hz	
Fuse	MPA 5111	6.3 A slow-blow fuse or 10 A fast-blow fuse, integrated, exchangeable
Type of protection	IP 20	
Ambient temperature	0 °C +60 °C	
Humidity	DIN 60730-1, no dewing admissible	
Electrical connection	Correct phase sequence and protective earth conductor according to the wiring diagram	
Mounting position	as desired	
Dimensions	approx. 200 x 105 x 115 mm	
The admissible cable length to the display is max. 3 m		
The admissible cable length to the stepped motor is max. 3 m		

5.2 Outputs					
Designation	**Safety-related**	**Type of output**	**Electrical data**	**MPA 5111**	**Extension Module**
Additional valve Y1	●	Relay contact	230 V AC / 2 A (∑ < 5 A)	●	
Valve Y2	●	Relay contact	230 V AC / 2 A (∑ < 5 A)	●	
Valve Y3	●	Relay contact	230 V AC / 2 A (∑ < 5 A)	●	
Spark generator	●	Relay contact	230 V AC / 3 A (∑ < 5 A)	●	
Fan		Relay contact	230 V AC / 4 A	●	
PWM 1 (for ex. fan)		PWM	24-31 V DC / 4 kHz	●	
Fused mains power supply		Main volltage	230 V AC / 4 A	_	●
Operation display		Internally via V2	230 V AC / 1 A (∑ < 5 A)	●	
Fault output		Relay contact	230 V AC / 1 A	●	
Supply flame detector		Internally via fan	230 V AC / 0.1 A	●	
PWM 2 (e.g. 0...10 V)		for example analogue output	for example 0...10 V	_	●
PWM 3 (e.g. 4...20 mA)		for example analogue output	for example 4...20 mA	_	●
Stepped motor		Plug			●
Display		Plug			●
TWI communication		Plug			●
Cable length max. 10 m					
The sum of the currents of all safety-related consumers must not exceed 5 A!					
The sum of the currents of all consumers must not exceed 6.3 A (10 A)					

Old documentation - Only for your information!
Product is not available anymore!

Printed in Germany • Edition 02.14 • Nr. 254 722

5.3 Inputs					
Designation	**Safety-related**	**Type of input**	**Electrical data**	**MPA 5111**	**Extension Module**
Flame detector	●	Ionisation	Threshold value: approx. 1.2 µA	●	
Air pressure switch	●	Switching contact (potential-free)	24V DC / 10 mA	●	
Gas pressure detector	●	Switching contact (potential-free)	24V DC / 10 mA	●	
Gas pressure detector VPS	●	Switching contact (potential-free)	24V DC / 10 mA	●	
Safety chain	●	Switching contact	230V AC / max. 10 A	●	
Temperature controller		Switching contact	230V AC	●	
Power controller +/-		Switching contact	230V AC	●	
Fan speed		Hall sensor	24V DC	●	
Exchangeable backup fuse		Fuse	6.3 A slow-blow or 10 A fast-blow	●	
Remote unlocking		Switching contact	230V AC	●	
Analogue set-point		Plug			●
Cable length max. 10 m					

5.4 Extension module
equipped with analogue inputs and outputs (e.g. MPA-EM1/3):

Analogue outputs
0/2...10 V, load >= 2 kilo ohms
0/4...20 mA, load <= 500 kilo ohms
(Attention! The output must not connected to GND!)

Analogue input
0/2...10 V, Imax = 0.5 mA
or
0/4...20 mA, apparent ohmic resistance R <= 500 kilo ohms

The inputs and outputs are NOT electrically isolated from the mains!

Old documentation - Only for your information! Product is not available anymore!

Integrated function	MPA-EM1/1	MPA-EM1/2	MPA-EM1/3	MPA-EM1/4
Display	●	●	●	●
TWI	●	●	●	●
Parameter record-stick	-	●	●	●
0...10 V input	-	-	●	●
0...10 V output	-	-	●	●
4....20 mA input	-	-	●	-
4...20 mA output	-	-	●	-
Stepped motor output	●	●	●	●
{component protection / encapsulated version}	●	●	●	-
Type of wiring diagram	A	A	A	A
P18: Operating mode PWM output	0	0	11	8
P27: Modification method Modulation	0,1	0,1	0,1,2,3	0,1,2,3

Printed in Germany • Edition 02.14 • Nr. 254 722

6 Connection diagram

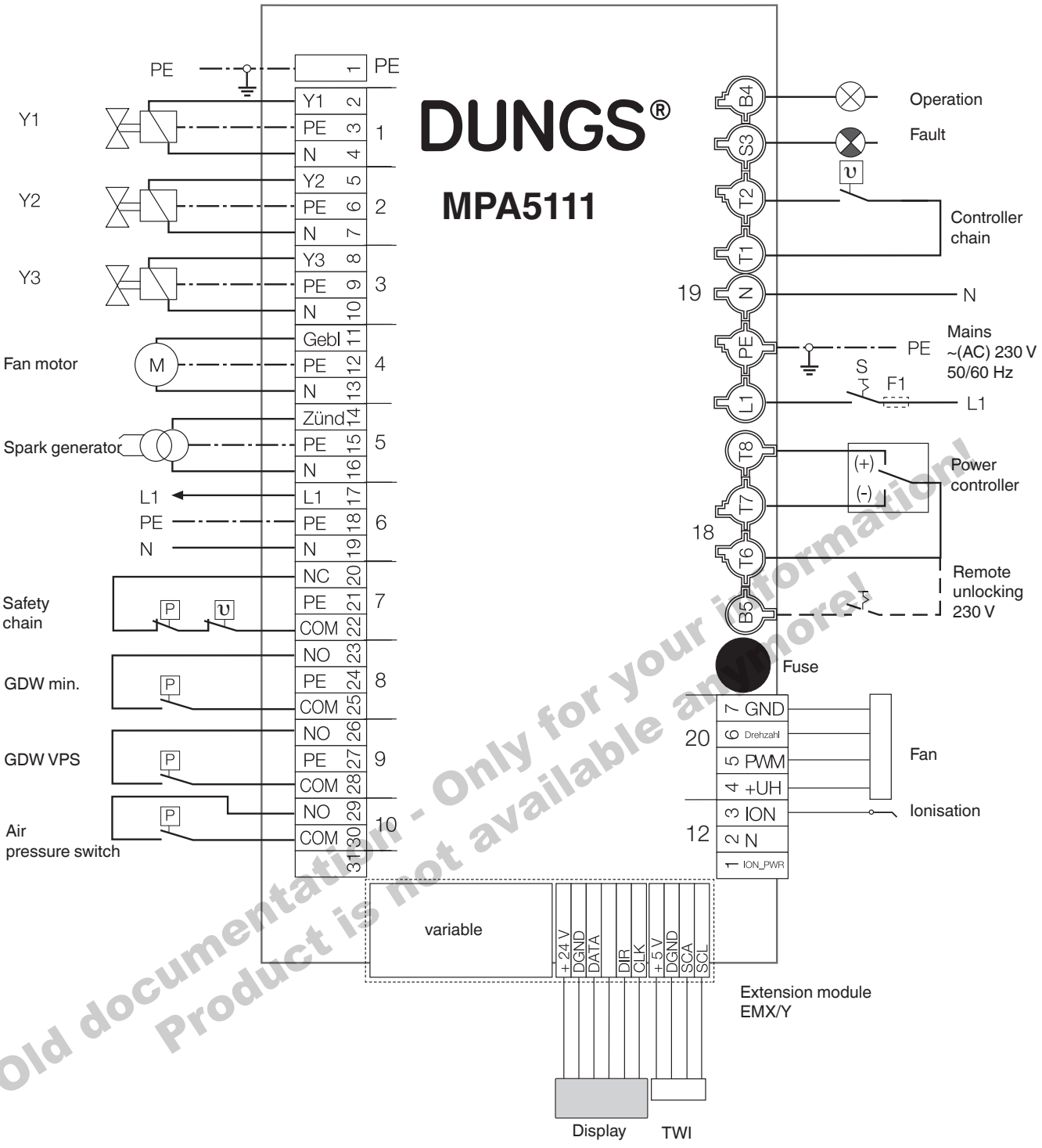

Old documentation - Only for your information!
Product is not available anymore!

Attention!
The designations Y1, Y2 and Y3 refer to the slots of the MPA.

Attention!
Output "operation" is internally connected to V2, i.e. it is also active in the states such as valve check.

Attention!
F1 is only necessary if no internal backup fuse is integrated!

Printed in Germany • Edition 02.14 • Nr. 254 722

Wiring diagram for extension module

The extension modules EMX/Y are plug-in printed circuit boards.
For the configuration the EM1/1 is the minimum requirement.
Old extension modules have a slot for display connection and a slot for PC/laptop connection via VisionBox for system configuration.

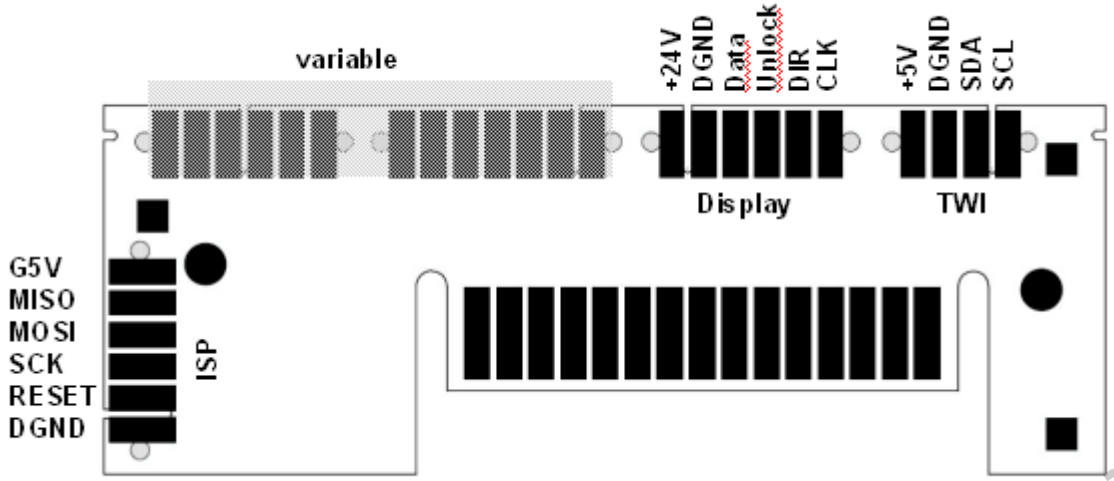

Additional connection options are provided in the "variable area".
The functions and pin assignments are different depending on the EM variant.

documentation - Only for your information!
Product is not available anymore!

EM 1/1

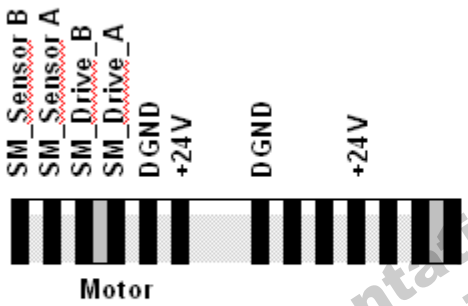

EM 1/2

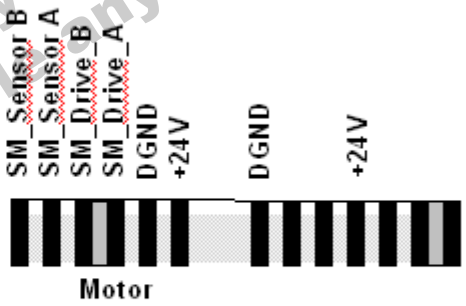

EM 1/3

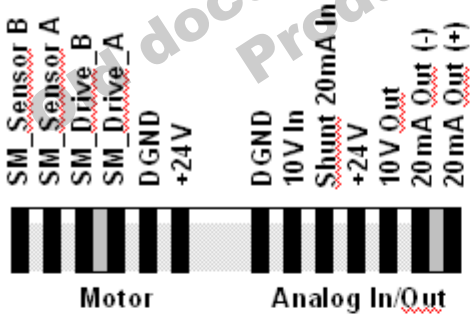

EM 1/4

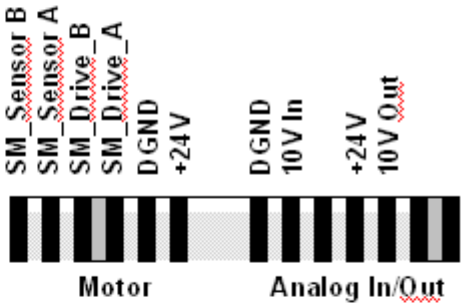

EM 1/5

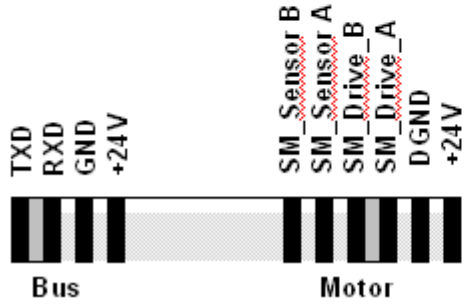

Printed in Germany • Edition 02.14 • Nr. 254 722

7 Description of the behaviour

7.1 Unlocking function

If the MPS is locked (state 0), it can be unlocked by pressing the unlock key. In order to distinguish the function from potential EMC interfering impulses, the key must be kept depressed for at least 1/4 second.
The same applies for the 230 V unlocking.

According to DIN EN 14459 (annexe J), the number of possible unlockings are limited to 5 in 15 minutes, that means the automatic system denies further unlockings if the MPA has been unlocked more than 5 times within a short time period. Only after a waiting time during which the MPA is provided with power, it is possible to unlock the MPA again.

The waiting time is 15 minutes or 3 minutes for each unlocking

Extended unlocking

The described limitation to 5 unlockings in 15 minutes can be reset using the "Extended unlocking". To do this, the unlock key must be pressed for at least 5 s (max.. 10 s) (after 5 s, the display begins to flash).

The "Extended unlocking" is active in all operational states of the MPA, that means that a safety cut-off with restart of the MPA in operation can be carried out via the "Extended unlocking" also in the presence of a flame.

230 V unlocking input!

7.2 Access level

Write access to MPA is defined on different access levels.
Each parameter is assigned to a certain access level. In order to modify a parameter, MPA must be at the assigned or higher level.
If the access level is not sufficient to modify a parameter, the VisionBox reports it, or a message is output on the MPA display prompting the user to enter the valid password. At higher levels, the users must press a key to confirm that they are "on site". For this purpose the display is flashing for 30 s if a key is pressed; otherwise, the MPA remains at the previous level.
To change the access level, the correct password must be entered in the "VisionBox → Settings MPA → Access level". The access level is automatically reset after 5 hours or after power failure. Exception: If the automatic gas burner performs a restart during these 5 hours, for example due to an error, these 5 hours for the current access level are counted again from the beginning.

NOTE: After completing configuration of the automatic gas burner it is recommended to reset the access level immediately manually (display) by means of the shortcut - and ←, setting "E1" (see chapter Display unit).

Level	Designation	Key confirmation required
1	Dungs	yes
2	OEM Expert	yes
3	OEM	yes
4	Service	yes
5	Operator	no

7.3 Parameter change

Parameter types:
1-bit parameter (U1) - setting 0 and 1 (displayed as ON/OFF), no limits
8-bit parameter (U8) - value setting within variable limits
16-bit parameter (U16) - value setting within variable limits.

A parameter can be modified on the display (see Appendix BMA_display) of MPA or via the VisionBox software on a PC.

In order to change a parameter, the access level assigned to the parameter must be set, see chapter Access level.

The value must be within the variable limits; a value outside these limits is not possible or it is rejected by the MPA.
Experts can change the variable upper and lower limits, usually it requires a higher access level than the level assigned to the parameter value. The variable limits may only be changed by means of VisionBox, not on the MPA display. The variable limits are restricted by means of fixed limits. The variable limits cannot be changed outside of these limits. These fixed limits cannot be changed.
There are parameters which cannot be changed during normal operation, see Appendix Parameter table. To change these parameters it is necessary to switch to the state "Waiting for heat request".
The parameter stick (extension module) monitors selected parameters during start-up (see 8.11)

7.4 Special operating modes

7.4.1 Operation without valve check system

If the valve check during start-up (P40) and the valve check after a regular switch-off (P41) are inactive, a simultaneously activated double gas valve can also be used instead of two individual gas valves. This double valve must be activated using the valve output V2 of the MPA since V1 opens before the safety time for the start-up has elapsed!
Note: Even if P46 is "active", the input GDWVPS is still monitored!

7.4.2 Operation with valve check system

If the valve check is active during start-up (P40), it will be carried out during each start-up. The time required for the valve check is not included in the Adjustable pre-aeration time (P60 and P61) and, therefore, it can be reduced.
If the valve check after a regular switch-off (P41) is active, it will be carried out after every regular switch-off.

Additionally, a valve check during start-up is carried out if the valve check after the last regular switch-off has not been successful, if the automatic system has been switched off by a safety shutdown or if a power failure has occurred since the last switch-off.

If the valve tightness test has been completed successfully and P41 is inactive, the tightness test and the state "Pre-aeration B" are skipped during the next start-up (see section "Operation with reduced pre-aeration time").

Old documentation! Only for your information! Product is not available anymore!

Printed in Germany • Edition 02.14 • Nr. 254 722

For a correct evaluation of the tests carried out, the parameters P40 to P46 must be correctly calculated and set.

Formula to calculate the test times for V1 and V2:

$$t_{test\ V1} = \frac{p_e * V_P * \ln (p_e / (p_e - p_{S1}))}{p_{atm} * Q_P} * 3600\ s/h * S$$

$$t_{test\ V2} = \frac{p_e * V_P * \ln (p_e / p_{S2})}{p_{atm} * Q_P} * 3600\ s/h * S$$

$$t_{P43} = t_{test\ V1} * 16/s$$
$$t_{P45} = t_{test\ V2} * 16/s$$

$t_{test\ V1}$	[s]	Test time for V1
$t_{test\ V2}$	[s]	Test time for V2
t_{P43}	[ ]	to be entered in P43
t_{P45}	[ ]	to be entered in P45
p_e	[mbar]	Gas inlet pressure
p_{S1}	[mbar]	Increasing switching pressure (set pressure at the controller +15 % + switching difference)
p_{S2}	[mbar]	Falling switching pressure (set pressure at the controller -15 %)
p_{atm}	[mbar]	Atmospheric pressure = 1013 mbars
V_P	[dm^3]	Test volume between the valves to be monitored
Q_P	[dm^3/h]	Admissible leakage rate according to EN1643. The leakage rate corresponds to 0.1 % of the burner's gas consumption at maximum burner load, but at least 50 dm^3/h. A limit value of 200 dm^3/h is recommended by DUNGS!
S	[ ]	Safety factor, DUNGS recommends triple safety

Old documentation - Only for your information! Products not available anymore!

Printed in Germany • Edition 02.14 • Nr. 254 722

Example
A DMV-D(LE) 525/11 with 20 mbars inlet pressure is used. In this application, the admissible leakage rate according to EN1643 is^3 / h. The gas pressure detector is set to 10 mbars.

p_e = 20mbars
V_P = 0.44 dm^{3}see Test volume table, page 12
Q_P = 50 dm^3 / h (determined according to DIN EN 1643)
p_{S1} = 10mbars + 15 % + 1mbar switching difference = 12.5 mbars
p_{S2} = 10mbars - 15 % = 8.5 mbars
S = 3 (recommendation DUNGS)

$$t_{test\ V1} = \frac{20\ mbar * 0.44\ dm^3 * \ln(20\ mbar / (20\ mbar - 12.5\ mbar))}{1013\ mbar * 50\ dm^3 / h} * 3600\ s/h * 3 = 1.84\ s$$

$$t_{P43} = 1.84\ s * 16/s = 29.5$$

To be entered in P43: 30 or more
(corresponds to 1.88 s)

$$t_{test\ V2} = \frac{20\ mbar * 0.44\ dm^3 * \ln(20\ mbar / 8.5\ mbar)}{1013\ mbar * 50\ dm^3 / h} * 3600\ s/h * 3 = 1.61\ s$$

$$t_{P45} = 1.61\ s * 16/s = 25.7$$

To be entered in P45: 26 or more
(corresponds to 1.63 s)

Old documentation - Only for your information! Product is not available anymore!

Valve/valves leaking

1. Switch off system
2. Check valve V1 and/or V2 for leakage
3. If leaking, replace valve V1 and/or V2.

Attention! In case of interference suppression, always observe the application- and country-specific requirements as well.

Printed in Germany • Edition 02.14 • Nr. 254 722

Test volume of the DUNGS Multiple actuators MB-D ..., MB-ZR..., MB-VEF..., DMV-...., MBC....

Type	Nominal diameter Rp / DN	Test volume
DMV-D(LE) 503/11	Rp 3/8	0.03 l
DMV-D(LE) 507/11	Rp 3/4	0.10 l
DMV-D(LE) 512/11	Rp 1 1/4	0.24 l
DMV-D(LE) 520/11	Rp 2	0.24 l
DMV-D(LE) 525/11	Rp 2	0.44 l
DMV-D(LE) 5040/11	DN 40	0.38 l
DMV-D(LE) 5050/11	DN 50	0.39 l
DMV-D(LE) 5065/11	DN 65	0.69 l
DMV-D(LE) 5080/11	DN 80	1.47 l
DMV-D(LE) 5100/11	DN 100	2.28 l
DMV-D(LE) 5125/11	DN 125	3.56 l
DMV-1500-D	Rp 2	0.44 l
DMV-...(DLE) –65	DN 65	1.47 l
DMV-...(DLE) –80	DN 80	2.28 l
DMV-...(DLE) –100	DN 100	3.55 l
MB-D(LE) 403	Rp 3/8	0.04 l
MB-D(LE) 405	Rp 1/2	0.11 l
MB-D(LE) 407	Rp 3/4	0.11 l
MB-D(LE) 410	Rp 1	0.33 l
MB-D(LE) 412	Rp 1 1/4	0.33 l
MB-D(LE) 415	Rp 1 1/2	0.24 l
MB-D(LE) 420	Rp 2	0.24 l
MB-ZRD(LE) 405	Rp 1/2	0.11 l
MB-ZRD(LE) 407	Rp 3/4	0.11 l
MB-ZRD(LE) 410	Rp 1	0.33 l
MB-ZRD(LE) 412	Rp 1 1/4	0.33 l
MB-ZRD(LE) 415	Rp 1 1/2	0.24 l
MB-ZRD(LE) 420	Rp 2	0.24 l
MB-VEF 407	Rp 3/4	0.11 l
MB-VEF 412	Rp 1 1/4	0.33 l
MB-VEF 415	Rp 1 1/2	0.24 l
MB-VEF 420	Rp 2	0.24 l
MB-VEF 425	Rp 2	0.44 l
MBC 300	Rp 3/4	0.05 l
MBC 700	Rp 1 1/4	0.61 l
MBC 1200	Rp 2	2.05 l
MBC 1900	DN 65	1.47 l
MBC 3100	DN 80	2.28 l
MBC 5000	DN100	3.55 l

Old documentation - Only for your information!
Product is not available anymore!

Printed in Germany • Edition 02.14 • Nr. 254 722

Determination of the test volumes for DUNGS Single solenoid valves.../5

Nominal diameter Rp / DN	**Test volumes** = volume $V1_{output\ side}$ + $V2_{input\ side}$ + pipeline									
	direct		0.5 m		1.0 m		1.5 m		2.0 m	
	Rp	DN	Rp	DN	Rp	DN	Rp	DN	Rp	DN
Rp 3/8	0.01 l		0.06 l		0.11 l		0.16 l		0.21 l	
Rp 1/2	0.07 l		0.17 l		0.27 l		0.37 l		0.47 l	
Rp 3/4 (DN 20)	0.12 l		0.27 l		0.42 l		0.57 l		0.72 l	
Rp 1 (DN 25)	0.20 l		0.45 l		0.70 l		0.95 l		1.20 l	
Rp 1 1/2 / DN 40	0.50 l	0.7 l	1.10 l	1.35 l	1.70 l	2.0 l	2.20 l	2.65 l	2.80 l	3.3 l
Rp 2 / DN 50	0.90 l	1.2 l	1.90 l	2.2 l	2.90 l	3.2 l	3.90 l	4.2 l	4.90 l	5.5 l
DN 65		2.0 l		3.7 l		5.3 l		7.0 l		8.6 l
DN 80		3.8 l		6.3 l		8.8 l		11.3 l		13.8 l
DN 100		6.5 l		10.5 l		14.4 l		18.4 l		22.3 l
DN 125		12.0 l		18.2 l		24.3 l		30.5 l		36.6 l
DN 150		17.5 l		26.5 l		35.2 l		44.1 l		52.9 l
DN 200		46.0 l		61.7 l		77.4 l		93.1 l		108.9 l

Typical values for the leakage rate

DN	**Test volume [litres] direct / 2 m**	**~ Burner capacity [kWh**		**adm. leakage rate [dm³ / h] 0.1 % of the burner capacity or 50 dm³ / h**
		5 mbars	**30 mbars**	
20	0.12 / 0.72	110	240	50
25	0.20 / 1.20	170	370	50
40	0.50 / 3.30	310	710	50-71
50	0.90 / 5.20	500	1100	50-110
65	2.00 / 8.60	910	2000	91-200
80	3.80 / 13.8	1250	2900	125-290
100	6.50 / 20.0	2050	4600	205-460
125	12.5 / 20.0	3500	7700	350-770

Old documentation - Only for your information!
Product is not available anymore!

Printed in Germany • Edition 02.14 • Nr. 254 722

7.4.3 Operation with reduced pre-aeration time

Under specific circumstances, the MPA can be started with a reduced pre-aeration time. For doing this, the valve tightness test after a regular switch-off (P41) must have been successful.

Settings for the operation **without** reduced pre-aeration:

a) Pre-aeration time A (P60): desired duration of the pre-aeration
b) Pre-aeration time B (P61): 0 (= is never carried out)

Setting for the operation **with** reduced pre-aeration time:

a) Pre-aeration time A (P60): 0 or pre-aeration time that is always required
b) Pre-aeration time B (P61): desired duration of pre-aeration if the valve tightness test was NOT finished successfully. This duration is ignored if the valve tightness test was successful after the last regular switch-off (duration 0)!

7.4.4 Operation with ignition gas flame

Basically, the MPA can be used for the operation with ignition gas flame.

Attention!

There is only one input for flame monitoring (ionisation).

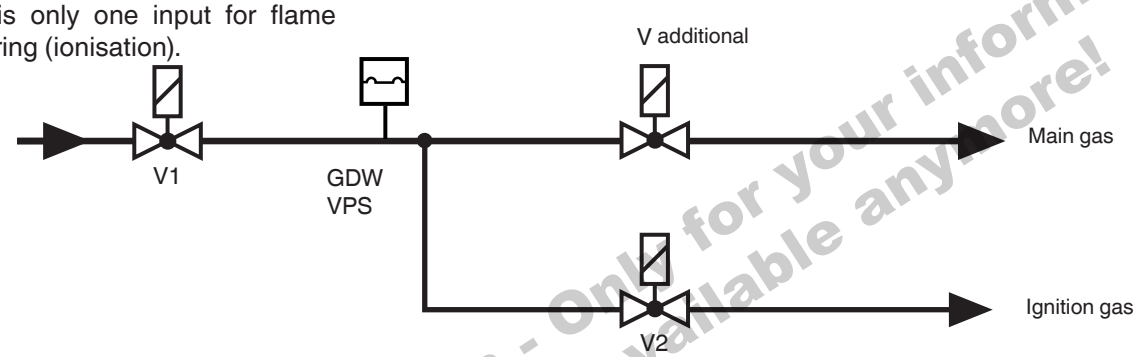

The common pre-valve must be connected to V1. The ignition gas valve is connected to the output V2 of the MPA and the main gas flame to the freely configurable additional valve output.

Attention!

The additional valve output must be configured according to the desired behaviour, that means that the moment for opening (P50 and P52) and closing (P51 and P53) must be defined via the respective parameters.

It is useful to open the main gas valve shortly after the state has switched to the stabilisation time B. So the ignition gas flame can be stabilised during the stabilisation time A, then, after the state has switched to the stabilisation time B, the fan power can be increased and, with a delay of a few seconds (P52), the main gas valve can be opened (for ex. if 50% of the typical duration time to reach the new fan power has been elapsed).

Old documentation - Only for your information! Product is not available anymore!

7.5 Special setting options

7.5.1 Different types of the air pressure detector monitoring

See section 8 "Parameter description" - P14.

7.5.2 Different types of the temperature controller default or heat request

See section 8 "Parameter description" - P15.

7.5.3 Different types of the modulation degree default

See section 8.7 "Parameter description" - P72.

7.5.4 Waiting program with open safety chain or lack of gas on the GDWVPS

See section 7.5 State 36: "Waiting program".

Printed in Germany • Edition 02.14 • Nr. 254 722

7.6 State description

MPA 5111

State xx	Designation	Description
00	**Error or initialisation**	The automatic control system is in the initialisation phase (e.g. reference run of the stepped motor) or an error is active. If an error is active, the display shows an error message and indicates the current fault (e.g. "F 11") instead of the state number 00.
01	**Waiting for heat request**	The automatic control system is ready for operation but there is no heat request.
02	**Adjustment parameter record to stick**	If the function parameter record stick (P10) is active, the adapted parameter record is compared to the settings in the MPA and, if necessary, the data are copied to the MPA after a password has been entered. If necessary, the password must be entered via the display. For this, a small "c" flashes.
03	**Idle state control fan and stepped motor**	The system waits until the fan and the stepped motor are in the OFF position If the fan has not completely stopped after at least 2 minutes and/or the stepped motor has not yet reached its position, the MPA is switched off and a respective error message is displayed.
04	**Idle state control LDW (air pressure detector)**	Depending on the operating mode of the air pressure detector (P14), it is checked if the air pressure detector reports "no air pressure"..
05	**Watchdog loading phase**	The safety-related watchdog -circuit is activated.
06	**Startup fan and stepped motor**	The system waits until the stepped motor has moved to its nominal pre-aeration position and the fan has reached its nominal pre-aeration speed. **Attention!** The fan control does not check the feedback of the fan!
07	**Waiting for air pressure**	Depending on the operating mode of the air pressure detector (P14), the system waits until the air pressure detector indicates the air pressure.
08	**VPS A - Decision**	In this state the decision is made if a valve test during startup must be carried out. See also section 7.3.2 Operation with valve testing system. If no valve test must be carried out, the state "Pre-aeration A" is activated. This state lasts only 1/16 of a second.
09	**VPS A - Empty the area between the valves**	V2 is opened (P42) in order to empty the area between the valves and to compensate the possibly existing gas pressure.
10	**VPS A - Test time V1**	In the defined test time (P43), no gas pressure may be built up in the area between the valves otherwise the valve 1 is considered as "leaking".
11	**VPS A - Fill the area between the valves**	V1 is opened (P44) in order to fill the area between the valves with gas pressure.
12	**VPS A - Gas pressure detection**	This states lasts only one-eighth of a second and serves for the monitoring of the gas pressure detector GDWVPS.
13	**VPS A - Test time V2**	The gas pressure may not drop within the defined test time (P45) otherwise the valve 2 is considered as "leaking". Note: When the MPA with ignition gas flame is used, also the additional valve (= main gas flame) may be leaky although the error message refers to V2.
14	**Pre-aeration A**	This state provides a sufficient pre-aeration. The defined duration (P60) is observed for every startup.

Old documentation - Only for your information!
Product is not available anymore!

7.6 State description

MPA 5111

State xx	Designation	Description
15	**Pre-aeration B**	This time is a second pre-aeration time. Contrary to the "Pre-aeration A" state, this state is skipped if the last switch-off of the MPA was a regular switch-off with successful valve tightness test. Moreover, no power failure must have been occurred since the last switch-off. This state can be used, for example, to realise a "Reduced pre-aeration" whose duration (P61) is defined in the state "Pre-aeration B" and the duration of the "Pre-aeration A" (P60) is set to 0 seconds or to the minimum required pre-aeration time. Please observe: The actual pre-aeration time increases by the time for the valve tightness tests (P40 to P45) in the startup phase, if they are activated. See also section 7.2.3 "Operation with reduced pre-aeration".
16	**Ignition position**	The MPA moves to the special modulation point "Ignition position". This state lasts as long as the stepped motor has reached its new position and the fan works with the set speed. The fan monitoring of the MPA waits until the fan has swung into the regular operation (detection of upper and lower limit in the tolerance range).
17	**Gas detection GDWVPS**	The valve 1 is opened so that a gas pressure can be built up between the valves and the GDWVPS can detect a gas pressure (P62). If both types of valve test (startup P40 and switch-off P41) are deactivated, the GDWVPS is not monitored! A bridge is not necessary.
18	**Pre-ignition**	The ignition is already activated here (P63) without opening valve 2. The valve output 1 is already active!
19	**SZA - Ignition**	During this period (P64), the ignition remains active and valve 2 is open. The gas can flow now and a flame can be generated. This state is 0.5 seconds shorter than the time set in P64 because the safety time for startup is divided in state 19 and 20!
20	**SZA - Flame detection**	The ignition is deactivated 0.5 seconds before the end of the safety time for startup (P64) and the procedure for flame detection (ionisation input) is started. If an ionisation current is detected, the MPA reports a flame.
21	**Stabilisation flame A**	The flame can be stabilised with the help of a configurable special modulation point. The duration of the stabilisation phase (P65) can be configured.
22	**Stabilisation flame B**	Another special modulation point can be defined for this stabilisation phase (P66). When using the MPA with pilot burner, this state can be used to activate the main flame. The main gas valve (=additional valve) can be activated after an adjustable time (P50 and P52) after the changeover to the state. See also section 7.4.4 Operation with ignition gas flame
23	**Changeover to the standard mode**	The MPA leaves the current special modulation point and moves to the start simulation point of the standard mode (P67).

Old documentation - Only for your information!
Product is not available anymore!

Printed in Germany • Edition 02.14 • Nr. 254 722

7.6 State description

MPA 5111

State xx	Designation	Description
24	**Standard mode**	In this mode, the MPA can be modulated via several types (see P70 to P76, especially P72). A voluntary switch-off after a defined time can be activated (P70). If this time is set to a maximum of 23 hours and 59 minutes, the MPA is in the intermittent mode. Continuous operation (≥ 24 h) is only possible using a continuous operation stick, see section 8.11
25	**Changeover after regular switch-off**	This state can be used to define the modulation degree after a regular switch-off (see also P80 and P81). Possible application: In order to avoid a switch-off when the system is under full load, this state can be used to reduce (or increase) the power to a defined value.
26	**VPS B - Decision**	In this state the decision is made if a valve test must be carried out. See Operation with valve testing system. This state lasts only 1/16 of a second.
27	**VPS B - Empty the area between the valves**	V2 remains open (P42) in order to empty the area between the valves and to compensate the possibly existing gas pressure.
28	**VPS B - Test time V1**	In the defined test time (P43), no gas pressure may be built up in the area between the valves otherwise the valve 1 is considered as "leaking".
29	**VPS B - Fill the area between the valves**	V1 is opened (P44) in order to fill the area between the valves with gas pressure.
30	**VPS B - Gas pressure detection**	This states lasts only one-eighth of a second and serves for the monitoring of the gas pressure detector GDWVPS.
31	**VPS B - Test time V2**	The gas pressure may not drop within the defined test time (P45) otherwise the valve 2 is considered as "leaking". Note: When the MPA with ignition gas flame is used, also the additional valve (= main gas flame) may be leaky although the error message refers to V2.
32	**Follow-up time**	During this time (P82), a flame signal may be present from the previous mode caused by e.g. existing residual gas in the combustion chamber. The external light monitoring is only started in the following state.
33	**Post-aeration**	In this state, the post-aeration of the combustion chamber is carried out (P83). In this state, no flame must be detected. Since the duration of the state with the setting P83=0 is only a few milliseconds, the MPA reacts also to external light if "no" post-aeration is configured.
34	**Restart protection**	In this state, the temperature controller is not evaluated, that means if another heat request is sent or activated, the automatic is not restarted.
35	**Lack of gas GDWMIN**	If the input GDWMIN of the automatic system is not closed, the automatic system waits in this state until the gas pressure is detected.

Old documentation - Only for your information!
Product is not available anymore!

Printed in Germany • Edition 02.14 • Nr. 254 722

7.6 State description

MPA 5111

State xx	Designation	Description
36	**Waiting program**	The MPA switches to this state if a lack of gas on the GD-WVPS (depending on P46) or an open safety chain has been detected during startup. The MPA remains in this state for a certain waiting time and then carries out another restart test. The number of restart tests is configurable (P90). The waiting time duration depends on the number of waiting times that have been executed before. The first time, the waiting time is 2 minutes, the second time 5 minutes and the third time 1 hour and afterwards a time duration defined by a parameter is applied. If the waiting time defined by a parameter (P91) is shorter than the firmly defined times of the first 3 restart tests, these are also reduced to the parameter-defined time. The respective waiting time can be interrupted by setting the temperature controller to OFF (OFF depends on the operating mode in P15!). The waiting program start from the beginning if the automatic system a) has been separated from the mains, b) has been unlocked or c) has reached the standard mode after a restart test.

Old documentation - Only for your information!
Product is not available anymore!

Printed in Germany • Edition 02.14 • Nr. 254 722

8.1 P1x General parameters

Parameter P1x	Designation	Description	Setting / Examples
P10	**Parameter stick: active**	Indicates if the parameter record stick is to be checked or copied, if necessary, during the restart phase. See also section 8.11 Stick for parameter record and continuous run.	Setting 0: Parameter stick deactivated Setting 1: Parameter stick active
P11	**Restart attempts**	Here you can set the number of restart attempts the MPA is allowed to be carried out before the fault switch-off is activated (state "Error"). The anti-oscillation counter is reset to this value as soon as the MPA has reached the state "Standard mode" or the MPA has been unlocked. The number of restarts is internally counted by means of the anti-oscillation counter.	
P12	**Restart attempts due to a missing flame**	The number of restart attempts (P11) can be limited here for the special case that no flame has been generated during the safety time. For this purpose, the restart counter is internally implemented. The anti-oscillation counter as well as the restart counter are activated!	Example: P11 = 5, P12 = 1 During the first start phase, no flame is generated → 1. Restart attempt → Error idle state control LDW → 2. Restart attempt → Error idle state LDW 3. Restart attempt After the third restart attempt LDW OK, there is still no flame Automatic burner control is locked.
P13	**Restart attempts after the flame has gone out**	The number of restart attempts (P11) can be limited here for the special case that a flame has gone out. For this purpose, also the restart counter is internally used. The anti-oscillation counter as well as the restart counter are activated!	Example: P11 = 5, P13 = 1 Flame gone out during operation 1. Restart attempt Error Idle state control LDW 2. Restart attempt Error Idle state control LDW 3. Restart attempt No flame is generated after the third restart attempt LDW OK Automatic burner control is unlocked.

Old documentation. Only for your information! Product is not available anymore!

Printed in Germany • Edition 02.14 • Nr. 254 722

8.1 P1x General parameters

Parameter P1x	Designation	Description	Setting / Examples
P14	**Operating mode LDW**	The LDW (air pressure detector) must be activated! It must be set in a way to guarantee an activation also if there is only a minimum power. Basically, DUNGS recommends to use the operating mode 0. Exceptions can partly be accepted. The LDW can be operated in 4 operating modes.	Setting 0: The LDW is active and is monitored. Setting 1: No idle state control is carried out. Otherwise, the LDW is permanently active. Attention! Ifthe LDW is jammed or if there is a wire bridge there will be no error message during the startup phase! Setting 2: The LDW is monitored only during startup, that means only to the state "Waiting for air pressure". In the following state, an LDW which is not active does NOT result in an error message. Setting 3: The LDW is monitored during the startup phase if the current modulation degree is higher than the start modulation degree in the standard mode. That means that, in case of small modulations, the LDW can switch-off without generating the error message "No air pressure" and deactivating the MPA. Moreover, the LDW is not monitored after the pre-aeration until the standard mode is reached and, in case of a regular switch-off, it is not monitored until the post-aeration is reached. Attention! This operating mode is only allowed, if the fan is controlled (internal plausibility check of the feedback signals).

Old documentation - Only for your information.
Product is not available anymore!

Printed in Germany • Edition 02.14 • Nr. 254 722

ПРОМЭЛЕКТРОНИКА / sales@prom-elec.com

8.1 P1x General parameters

Parameter P1x	Designation	Description	Setting / Examples
P15	**Operating mode Temperature controller**	The temperature controller can be operated in the following operating modes:	Setting 0: The temperature controller is always switched OFF, independently of the hardware input Setting 1: The temperature controller is always switched ON, independently of the hardware input Setting 2: The temperature controller is OFF, however, this operating mode must be defined again within one minute. Otherwise the automatic burner control switches to the setting 3. This can happen, for example, if the communication is interrupted. Setting 3: The temperature controller is assigned to the hardware input "Temperature controller". Internal setting (cannot be changed) 4...255: These values are used for the time monitoring for the setting 2, that means that, if the parameter P15 is configured to the setting 2, the MPA changes this setting to values between 4 and 255 and reaches the setting 3 after 1 minute (cyclical decrementation).
P16	**Parameter record: Customer ID**	This parameter indicates the customer ID defined in the parameter record stick. This allows to assign a parameter record to a customer. 0 means "No parameter record found" or "Startup (state 2) not yet carried out". The parameters P16 and P17 are read and updated during each startup (state 2). If no parameter stick was found, this value is 0. The value is also 0 if no startup has been carried out since the last processor start, that means if the automatic burner control never has reached the state 2. This applies also for a processor start, for ex. after a safety switch-off!	

Old documentation - Only for your information!
Product is not available anymore!

Printed in Germany • Edition 02.14 • Nr. 254 722

8.1 P1x General parameters

Parameter P1x	Designation	Description	Setting / Examples
P17	**Parameter record: Record ID**	This parameter indicates the record ID defined in the parameter record stick. This allows to distinguish several parameter record versions of a customer. 0 means "No parameter record found" or "Startup (state 2) not yet carried out". The behaviour is the same as described in P16.	
P18	**Operating mode PWM outputs**	Using this parameter, the behaviour of the outputs PWM2 and PWM3 can be changed in order to, for ex., activate analogue outputs correctly. The external function activated by PWM2 and PWM3 are defined by the plugged-in extension module which allows to activate each of the two outputs by a digital signal (PWM for fan, frequency converter, ...) or by an analogue signal with 0...10 V or 4...20 mA.	

Old documentation. Only for your information! Product is not available anymore!

The correct setting for P18 is indicated in the following table

Setting P18	Configuration PWM2 as:	Configuration PWM3 as:
0	OFF	OFF
1	OFF	PWM signal
2	OFF	Analogue 0...10 V
3	OFF	Analogue 4...20 mA
4	PWM signal	OFF
5	PWM signal	PWM signal
6	PWM signal	Analogue 0...10 V
7	PWM signal	Analogue 4...20 mA
8	Analogue 0...10 V	OFF
9	Analogue 0...10 V	PWM signal
10	Analogue 0...10 V	Analogue 0....10 V
11	Analogue 0...10 V	Analogue 4....20 mA
12	Analogue 4...20 mA	OFF
13	Analogue 4...20 mA	PWM signal
14	Analogue 4...20 mA	Analogue 0...10 V
15	Analogue 4...20 mA	Analogue 4...20 mA

P18 Example: The extension module MPA-EM1/3 is equipped with a conversion from PWM2 to 0...10 V and with a conversion from PWM3 to 4...20 mA. The correct setting results from:
P18 = 11 (for MPA-EM1/3)

P18 Note
If the configuration "4...20 mA" is selected for a voltage output, this corresponds to a voltage output of 2...10 V.

If the configuration "0...10 V" is selected for a current output, this corresponds to a current output of 0...20 mA.

Printed in Germany • Edition 02.14 • Nr. 254 722

8.2 P2x - Fan

The MPA51 controls the fan by means of PWM signal and evaluates a hall sensor signal delivered by the fan in form of a rotation speed.
The number of feedback pulses per rotations has to be indicated in P24.
In case of wrong values in P24, the MPA calculates a wrong rotation speed!
The MPA can control or regulate the fan (PI controller).

8 Parameters			
8.2 P2x Fan			
Parameter P2x	**Designation**	**Description**	**Setting**
P20	**Fan: Control**	Indicates if the fan is controlled or regulated. For the regulation, a feedback signal to record the fan speed is required!	Setting 0: Control Setting 1: Regulation
P21	**Fan: Delay / ramp**	a) For fan control: This parameter is used to smoothen jumps of the fan activation signal (PWM signal). b) For fan regulation: The desired fan behaviour can be reached by means of the KP and TN factors. However, jumps in the setpoint values for the fan can be slowed down via the ramp delay function.	Setting 0 means that even big jumps are immediately transformed. The bigger the set value the slower the PWM signal is adapted to its new nominal value in case of changes. The value of the parameter should be set to 0.

Old documentation - Only for your information!
Product is not available anymore!

Printed in Germany • Edition 02.14 • Nr. 254 722

8.2 P2x Fan

Parameter P2x	Designation	Description	Setting
P22	**Fan: KP factor**	a) For fan control: This factor is only relevant if the fan is controlled! b) For fan regulation: The Kp factor defines the effect of the difference between nominal value and actual value on the regulating value. Kp is no proportional factor: • small Kp values result in a slow adaptation to the nominal value. • big Kp values result in a fast regulation, but can also create an overshooting Always observe the interaction between the P and I part, that means that a separate consideration of Kp and Tn is not possible!	
P23	**Fan: TN factor**	a) For fan control: This factor is only relevant if the fan is controlled! b) For fan regulation: The Tn factor defines the effect of the history, that means the accumulated difference between the nominal and the actual value (integration), to the regulating value. Tn is a division factor: • small Tn values result in a fast but more instable regulation. Resonance and swinging-up systems are the possible effects of wrong values. • big Tn factors stabilise the system. Always observe the interaction between the P and I part, that means that a separateconsideration of Kp and Tn is not possible!	
P24	**Fan: Pulses per rotation**	a) For fan control: This value is only relevant if the fan speed is to be recorded! The recording has no influence on the behaviour of the MPA. b) For fan regulation: The number of impulses per rotation provided by the fan must be set here. If an incorrect value is indicated, the determined speed is incorrectly calculated.	

Old documentation - Only for your information! Product is not available anymore!

Printed in Germany • Edition 02.14 • Nr. 254 722

8.2 P2x Fan

Parameter P2x	Designation	Description	Setting
P25	**Fan: allowed tolerance**	a) For fan control: not relevant b) For fan regulation: Here the allowed deviation between the fan speed and the current nominal speed is defined. If the speed has been outside this tolerance range for a longer time period, the MPA is switched off.	
P26	**Fan: Min. speed**.	a) For fan control: The minimum PWM activation can be defined. If this value is not reached, the fan does not work correctly. Typically, a fan only works properly if the PWM signal reaches approx. 10 to 20 %. If this value is not reached, the fan begins to oscillate or does not work. If a fan activation lower than this value is calculated due to the settings in the curve segment, the MPA is switched off displaying a corresponding error message. **Attention!** There is no direct relation to the speed at a modulation degree of 100 %! b) For fan regulation: A minimum speed can also be entered here If this value is not reached during the calculations from the curve segment, the MPA creates a corresponding error message. **Attention!** There is no direct relation to the speed at a modulation degree of 0 %!	
P27	**Fan: Max. speed**	a) For fan control: This parameter should be set to 100 %. If another value is entered here, this will influence the programmed values in the curve segment! b) For fan regulation: Here, the maximum speed of the fan must be entered. A fan reaches the maximum speed if it is activated with 100% PWM and the air flow is blocked. **Attention!** There is no direct relation to the speed at a modulation degree of 100 %! (apply for adjustment a) and b))	

Old documentation - Only for your information! Product is not available anymore!

Printed in Germany • Edition 02.14 • Nr. 254 722

8.3 P3x Stepped motor

Parameter P3x	Designation	Description	Setting
P30	Stepped motor: Type	Selection Stepped motor type	

Possible types:

Parameter value	Configuration PWM2 as:	Configuration PWM3 as:
0	No stepped motor	–
1	reserved	–
2	SAD 1.2 or SAD 3.0 (IP54)	Standard / delivery position
3	SAD 1.2 or SAD 3.0 (IP54)	"changed" reference point
4	SAD 1.5 or SAD 3.0 (IP40) *1	Standard / delivery position
5	SAD 1.5 or SAD 3.0 (IP40) *1	"changed" reference point
6	SAD 15	Standard / delivery position
7	SAD 15	"changed" reference point
8	SAD 1.2 WG (Q3) or SAD 3.0 WG (Q3)	Standard / delivery position
9	SAD 1.2 WG (Q3) or SAD 3.0 WG (Q3)	"changed" reference point
10	SAD 10 WG (Q3)	Standard / delivery position
11	SAD 10 WG (Q3)	"changed" reference point

Attention!
A stepped motor must only be connected to the MPA or separated from the MPA if it is disconnected from the mains.
The change of this parameter only becomes effective after a restart of the MPA. The MPA can be restarted by interrupting the power supply or by means of the "Extended unlocking" (press the unlock key for 5 seconds).

If this parameter is programmed for a specific stepped motor type, this stepped motor must be connected.
An incorrect configuration of this parameter can lead to an overspeeding which may destroy the incorrectly configured stepped motor!

If the selected stepped motor is not found, it is not possible to change the stepped motor via the display of the MPA51xx. But there is the possibility to correct the parameters using the VisionBox.

Further information can be found in the annex 13: "Stepped motors".

***1 Attention!**
The stepped motors SAD 1.5 and SAD 3.0 with IP40 have another step width.
If the nominal value is 90° (VisionBox), these stepped motors have an actual angle of 93.37°, that means that all angle indications referring to nominal and current position must be converted to the actual position using the factor 0.963957. Vice versa, the factor 1.03739 is applicable.

Old documentation - only for your information! Product is not available anymore!

Printed in Germany • Edition 02.14 • Nr. 254 722

8.3 P3x Stepped motor

Parameter P3x	Designation	Description	Setting
P31	**Stepped motor: allowed tolerance**	This value defines the highest allowed deviation between the nominal value and the actual value of the determined stepped motor without activating a safety switch-off	

Old documentation - Only for your information!
Product is not available anymore!

Printed in Germany • Edition 02.14 • Nr. 254 722

8.4 P4x - VPS

Parameter P4x	Designation	Description	Setting
P40	**VPS: active during startup**		Setting 0: The valve test is not always carried out during startup (depending on P41) Setting 1: The valve test is carried out in each startup phase
P41	**VPS: active after switch-off**		Setting 0: The valve test is never carried out after a regular switch-off Setting 1: The valve test is carried out after every switch-off and, if necessary, in the startup phase (see section "Operation with valve testing system")
P42	**VPS: Duration Emptying area between valves**	Indicates how long V2 will be opened in order to let the possible overpressure escape into the combustion chamber.	
P42	**VPS: Test time V1**	Indicates the duration of the test in order to find out whether a pressure is being built up in the area between the valves.	
P44	**VPS: Duration Filling area between valves**	Indicates how long V1 will be opened in order to let gas flow into the area between the valves.	
P45	**VPS: Test time V2**	Indicates the duration of the test in order to find out whether gas escapes from the area between the valves.	
P46	**VPS: GDWVPS as minimum monitoring**	The GDWVPS input can also be used for the monitoring of the minimum gas pressure. For doing this, this parameter must be set to "Active". If this value is inactive, the GDWVPS input is only evaluated during the valve test.	

Old documentation - Only for your information! Product is not available anymore!

For the calculation of these parameters or for the settings recommended by DUNGS, see 7.4.2 Operation with valve testing system.

Printed in Germany • Edition 02.14 • Nr. 254 722

8.5 P5x - Additional valve

Parameter P5x	Designation	Description	Setting
P50	**Additional valve: Activation state**	In the state defined here, the output of the additional valve is activated. **Attention!** The actual activation can take place with a delay in time! See also P52.	
P51	**Additional valve: Deactivation state**	In the state defined here, the output of the additional valve is deactivated. **Attention!** The actual deactivation can take place with a delay in time! See also P53.	
P52	**Additional valve: Time-delayed activation**	Using this parameter, the time-delayed activation is defined, that means that the additional valve is switched on a set time period after the activation of the state defined in P50. **Attention!** If the duration of the state is shorter than the defined delay, the additional valve is only activated with the start of the subsequent state. For example, if the state "Pre-aeration A" is set with a delay in time of 40 seconds (P50 and P52), the pre-aeration time A, however, (P60) lasts only 30 seconds, the additional valve is already activated after 30 seconds when the next state is started (e.g. "pre-aeration B) and not 40 seconds after the start of the state "pre-aeration A".	
P53	**Additional valve: Time-delayed deactivation**	Same function as P52, but with a delay in time for the switch-off key.	

Old documentation - Only for your information!
Product is not available anymore!

Printed in Germany • Edition 02.14 • Nr. 254 722

8.6 P6x - Startup

Parameter P6x	Designation	Description	Setting
P60	**Pre-aeration time A**	Defines the duration of the pre-aeration A. For the difference between pre-aeration A and B, see section "Operation with reduced pre-aeration"	
P61	**Pre-aeration time B**	Defines the duration of the pre-aeration B. For the difference between pre-aeration A and B, see section "Operation with reduced pre-aeration"	
P62	**Duration gas detection startup phase**	Defines the duration of the gas detection GDWVPS in the section 7.5 State 17: "Gas detection GDWVPS" Here, the valve 1 is opened in order to let gas flow into the area between the valves. The GDWVPS must detect a gas pressure at the end of the state otherwise V2 is not opened due to a lack of gas and the MPA switches to the waiting program (see state 36: "Waiting program"). If both types of valve test are deactivated, the GDWVPS is not evaluated and the time duration can be set to 0!	
P63	**Pre-ignition time**	Defines the duration of a pre-ignition.	
P64	**Safety time for startup phase**	Defines the duration of the safety time for startup phase (SZA). **Attention!** This duration is divided in the two states "SZA ignition" and "SZA flame detection" while the state "SZA flame detection has always a duration of 0.5 seconds	
P65	**Stabilisation time A**	Defines the duration of the stabilisation time A. For the difference between stabilisation time A and B, see section 7.2.4 "Operation with ignition gas flame.SDSq	
P66	**Stabilisation time B**	Defines the duration of the stabilisation time B. For the difference between stabilisation time A and B, see section 7.2.4 "Operation with ignition gas flame.SDSq	
P67	**Start modulation degree Standard mode**	Indicates the modulation degree that the automatic burner control should adopt in the standard mode after the creation of the flame and after the stabilisation times A and B have elapsed. As soon as the standard mode has been reached, there are several options to modifiy the modulation degree (P72).	

Old documentation - Only for your information! Product is not available anymore!

Printed in Germany • Edition 02.14 • Nr. 254 722

8.7 P7x - Operation

Parameter P7x	Designation	Description	Setting
P70	**Duration Standard mode**	Here you can define whether the automatic burner control should carry out a voluntary switch-off. If yes, define the operating time (in minutes)	Typical settings: 0xFFFF = 65535 Continuous operation / no switch-off. 1439 = 23h 59 min intermittent operation. Also other values are possible, e.g. 60 = switch-off after 1 hour. Continuous operation (≥ 24 h) is only possible using acontinuous operation stick, see section 8.11
P71	**Modulation degree: new nominal value**	This value can be used to define a new modulation degree. As soon as the automatic burner control has recognised a new value, this parameter is reset to 0xFFFF (=65535).	
P72	**Modulation degree: Type of modification**	Defines the type of modulation degree that is predefined for the operation:	Setting 0: Externally, that means only by means of one of the communication interfaces to a new absolute value Setting 1: Plus / Minus, that means via a communication interface to an absolute value or upwards (plus) or downwards (minus) relative to the currently set modulation degree via the two corresponding hardware inputs. Setting 2: By means of a suitable extension module via an analogue input to an analogue predefined absolute value with the full range of values, for example 0 V (0 %) to 10 V (100 %). *1 Setting 3: By means of a suitable extension module via an analogue input to an analogue predefined absolute value with a limited range of values, for example 4 mA (0 %) to 20mA (100 %). *1

Old documentation - Only for your information! Product is not available anymore!

*1: The analog value is accepted as soon as the detected modification is > 5 % of the final value (e.g. > 1 mA at 4...20 mA). Modifications < 5 % are accepted only after a certain time (see P74).
Modifications between 0% and +0.5% are considered as "Noise" and are eliminated.

Printed in Germany • Edition 02.14 • Nr. 254 722

8.7 P7x - Operation

Parameter P7x	Designation	Description	Setting
P73	**Modulation degree: Step width of the modification**	Defines the maximum step width of a modulation degree modification without intermediate control. a) By means of relative modification via the plus or minus input, the nominal value is modified upwards or downwards by the value defined in P73. Further modifications are accepted as soon as the fan and the stepped motor work again in the allowed tolerance range (P25 and P31). b) Due to new absolute setpoints, the MPA modifies its current modulation degree step by step by the value defined here until the new setpoint is reached. After each intermediate step, the automatic burner control waits until the fan and the stepped motor work in the allowed tolerance range (P25 and P31).	
P74	**Modulation degree: Interval Acceptance of analogue values**	Defines the time interval for the evaluation and acceptance of the analogue input in the operating mode "Modulation degree setpoint via analogue input" (setting 2 and 3 of P72). Particularly for the operation with stepped motor, this time interval should not be too short in order to avoid repeated one-step movements forward and backward of the stepped motor. See also *1 of P72	
P75	**Modulation degree: Lower limit**	Defines a lower limit below which the modulation degree must not fall. Setpoints which fall below this limit are adjusted to the allowed range. Example: Lower limit = 10 %, new setpoint = 8 % Automatic burner control corrects the setpoint to 10 %.	
P76	**Modulation degree: Upper limit**	Defines an upper limit of the modulation degree which must not be exceeded. Setpoints which are outside this limit are adjusted to the allowed range. Example: Upper limit = 90 %, new setpoint = 97 % Automatic burner control corrects the setpoint to 90 %.	

Old documentation - Only for your information! Product is not available anymore!

Printed in Germany • Edition 02.14 • Nr. 254 722

8.8 P8x - Switch-off

Parameter P8x	Designation	Description	Setting
P80	**Regular switch-off: Transition time**	Using this parameter, a transition time can be activated in which the MPA remains after the failure of the temperature controller / heat request. The flame remains burning. During this time, the MPA moves to the modulation degree defined in P81. This function can be used to avoid that the MPA switches off in an undesired modulation degree. Attention! This setting can only be applied for the regular switch-off. In case of a safety switch-off, the MPA switches off without changing the modulation degree to the desired setting.	
P81	**Regular switch-off: Power during transition**	This value defines the desired modulation degree for a regular switch-off. Chose the value so that no undesired noise or vibrations are generated during the regular switch-off. Attention! A sufficiently long transition time after a regular switch-off (P80) must be defined in order to reach this modulation degree. Attention! This setting can only be applied for the regular switch-off. In case of a safety switch-off, the MPA switches off without changing the modulation degree to the desired setting.	
P82	**Follow-up time**	See state: "Follow-up time". Defines the time during which the external light is not monitored after a regular switch-off.	
P83	**Post-aeration time**	Defines the post-aeration time after a regular switch-off. Attention! After a safety switch-off, this post-aeration is not carried out!	
P84	**Off-period before restart**	Defines the duration of the compulsory waiting time until the automatic burner control is allowed to start again.	

Old documentation. Only for your information! Product is not available anymore!

Printed in Germany • Edition 02.14 • Nr. 254 722

8.9 P9x - Waiting program

Parameter P9x	Designation	Description	Setting
P90	**Waiting program: Restart attempts**	Defines the number of restart attempts after the errors "Lack of gas on GDWVPS" or "Safety chain open" until the MPA switches to the fault switch-off. The setting 0xFF and 255 means that an infinite number of restart attempts can be carried out without activating the fault switch-off of the MPA.	
P91	**Waiting program: Duration**	Defines the time period after which the MPA carries out another restart attempt. **Attention!** For the first restart attempts, the duration can differ from this setting! See state: "Waiting program".	

Old documentation - Only for your information!
Product is not available anymore!

Printed in Germany • Edition 02.14 • Nr. 254 722

8.10 Internal parameters

Parameter P10	Designation	Description	Setting
P250	**Internal parameters: Modulation degree modification allowed**	Please do not change!	
P251	**Parameter stick: Password**	Please do not change!	
P252	**Internal parameters: Programming of curves**	Please do not change!	

Old documentation - Only for your information!
Product is not available anymore!

Printed in Germany • Edition 02.14 • Nr. 254 722

8.11 Parameter record and stick for continuous run

The MPA51xx offers the possibility to load predefined parameter records from a stick.

The parameter record stick is adjusted during the startup phase (state 2). That means that, if the parameter P10 is active (=1), the data of the stick are compared with the data of the automatic burner control. If deviations are detected, the data on the stick are copied into the automatic burner control. To copy the data, a password which is adapted to the stick must be entered (a "c" flashes in the display).
If the parameter is not active (= 0), the function "Parameter record stick" is considered as not desired. Therefore, the data are not compared and not copied. The automatic burner control works with the data stored in the MPA.

The continuous run function is only possible using a stick. There is always a check (independent of P10) whether a continuous run stick is plugged in. At the same time, this can also be a parameter record stick.

It is not possible to copy a data record from the MPA to a parameter record stick. Parameter records must be generated and created by DUNGS.

Attention!
The parameters in the MPA only comply with the parameters of the parameter record stick if the parameter P10 is active!

Attention!
There are parameter record sticks which do not compare and copy all parameters but only a part quantity. Please observe which parameters are compared and copied by the plugged-in parameter record stick and which not.

A parameter record stick can be used for the following applications:

a) Configuration of the burner version with a**stick permanently plugged in**:
As soon as the stick is plugged in and the password is entered, a specific parameter record is transmitted to the MPA. Is is possible to modify parameters but, during the next startup phase (state 2), the modifications are recognised and the automatic burner control copies the data from the stick.
If the stick is removed, the MPA does not start again.

Attention!
According to the stick, some parameters are not considered during the adjustment process (stick with a part quantity of the parameters).

Attention!
For this application, the parameter P10 must never be deactivated!

This version is suitable for a permanent definition of the burner. When a (defective?) MPA is replaced, the stick connected to the burner guarantees that the new MPA uses the same settings than the old one.

b) Configuration of the burner version by a **stick which is used only once**:
As soon as the stick is plugged in and the password is entered, a specific parameter record is transmitted to the MPA (P10 must be active).
During a restart (recommended!) the new parameter record is again compared in state 2 with the values on the stick and thus the adjustment process is controlled. If a restart is carried out or not, the user has to check the new data and to enable the new settings by deactivating the parameter 10.
Note: the parameter view in the VisionBox must be updated!
After the unique copy process and the deactivation of the parameter 10, the stick may remain plugged in or can be replaced by another stick.
Even if the stick remains plugged in, modifications of the parameters are not recognised. For another data adjustment with the MPA, the parameter 10 must be activated. During the next startup phase
(state 2), the MPA carried out another data adjustment (protected by a password).

Attention!
According to the stick, some parameters are not considered during the adjustment process (stick with a part quantity of the parameters).

This version is suitable to program a unique configuration in a MPA, for example, in the production during a first startup, as a "Return-To-Factory-Settings function",...

Attention!
A special access level is defined for activation or deactivation of the parameter records on the extension module.

Old documentation - Only for your information!
Product is not available anymore!

Printed in Germany • Edition 02.14 • Nr. 254 722

9 Curve settings/ modulation degree

9.1. Stick and VisionBox

The programming of curves is only possible using the VisionBox and a parameter record stick! The curves cannot be processed via the 3 segments display!

It is possible to plug in the desired parameter record stick or to start the respective interface of the application software of the connected VisionBox under "View Programming of curves".

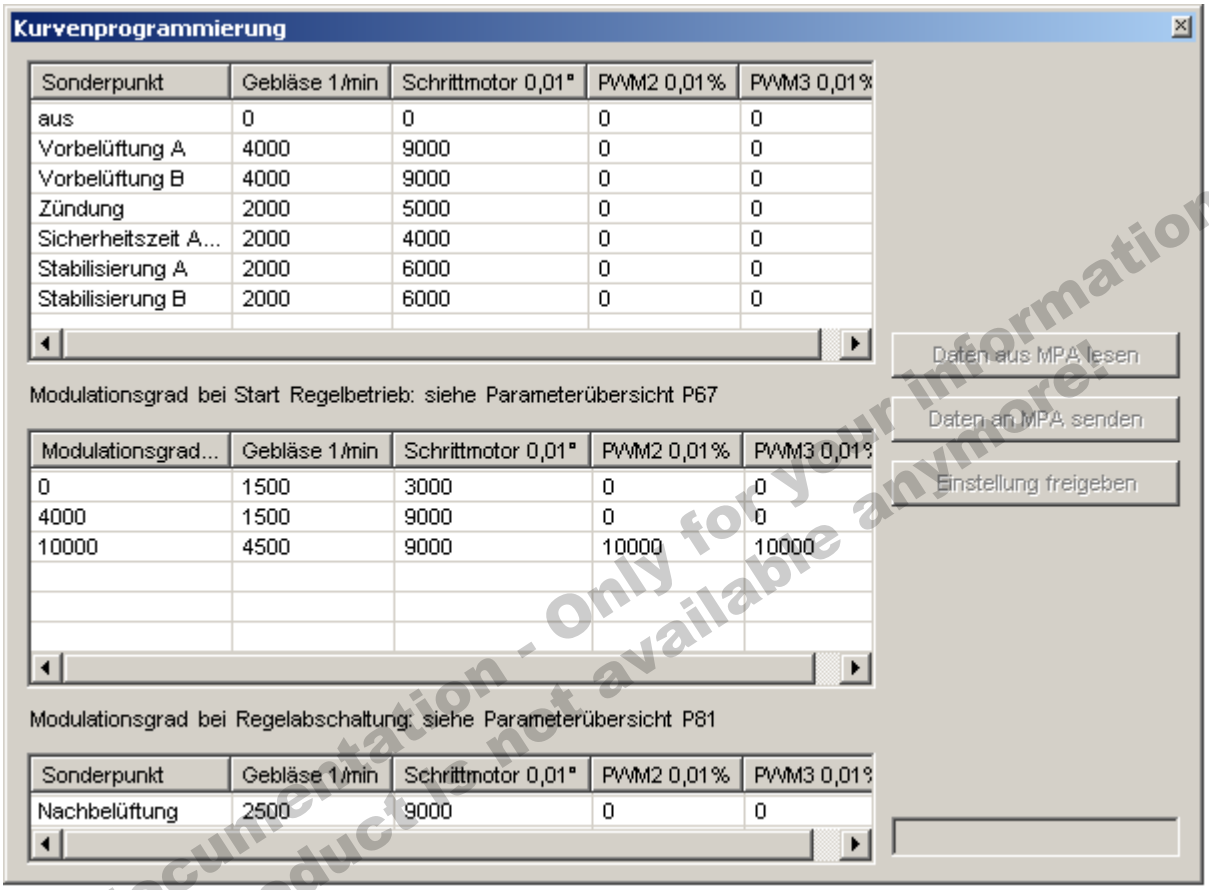

Old documentation - Only for your information! Product is not available anymore!

Here you can:

a) read the current settings of the MPA,

b) change the setting of the modulation degree point and the special points by a right mouse click,

c) transmit the modified settings temporarily to the MPA for test purposes.
Attention! Settings are reset after a restart of the MPA!

d) apply the modified settings in the MPA.
Attention! Applied settings are permanently active and remain stored.

PWM 2 and PWM 3 can be used according to the connected extension module for analogue output signals (for ex. 0...10 V or 4...20 mA).

Printed in Germany • Edition 02.14 • Nr. 254 722

9.2 Definition of terms

9.2.1 Burner capacity
Indicates the capacity and/or heat produced by the burner. Typically, the capacity is indicated in kWh.

9.2.2 Modulation degree
Normally, there is a difference between the modulation degree and the burner capacity. However, it is possible to program the MPA in a way so that the two values comply with each other!

It is possible to predefine the so-called "modulation degree" of the burner in the state "Standard mode" on the MPA using several options (see P72).

A specific combination of nominal value for the fan, stepped motor position and nominal value for PWM 2 and 3 is assigned to each modulation degree via the curve segment. That means that, if a new modulation degree is predefined, the MPA calculates the corresponding nominal values for the fan, for the stepped motor, for PWM 2 and PWM 3. Afterwards, the fan, the stepped motor, PWM 2 and PWM 3 are adapted to the new value.
The modulation degree can be changed in the range between 0 % and 100 %.

Attention!
0 % (100 %) do not comply necessarily to the lowest (highest) possible burner capacity! The actual burner capacity depends on the combination of all influencing values.

But the MPA can be set in a way that 0 % of the modulation degree complies to the minimum burner capacity and 100% to the maximum burner capacity. Minimum means in this case not "Flame Off" / " No heat" but "smallest possible flame". Also the modulation degrees between 0% and 100% can be programmed proportionally to the burner capacity. A relationship between modulation degree and burner capacity, however, is not necessary for the MPA.

Old documentation. Only for your information!
Product is not available anymore!

9.2.3 Curve point
In the MPA, up to 30 curve points can be programmed for the standard mode. At least 2 points must be available: one for the modulation degree 0 % and the second for a modulation degree 100 %.

A curve point defines the nominal value for the fan, the position of the stepped motor and the nominal values of the PWM signals 2 and 3 at the assigned modulation degree.

For modulation degrees which are not explicitly defined as a curve point, the MPA calculates the respective intermediate value from the previous and the subsequent point (linear interpolation).

2 curve points for the same modulation degree are not allowed! The curve points are automatically assorted in increasing order according to the modulation degree.

The programmed nominal values, for example for the stepped motor, can also be curves with changing curve directions, that means that even a curve can be programmed in the following way:

9.2.4. Special point
In order to define the respective combinations for fan, stepped motor, PWM 2 and PWM 3 also outside the standard mode, there are the so-called "Special points". They indicate the nominal values, for ex. during the pre-aeration, the ignition, the post-aeration, etc. These special points are assigned to specific states. They are not assigned to the modulation degree, since these special points must represent not valid combinations of the curve segment.

Printed in Germany • Edition 02.14 • Nr. 254 722

10 Error overview

MPA 51xx

Error ID	Internal error	Error description	Possible cause of the error
10.1 Errors from processor 2			
F1 Display flashes	●	No bus connection to processor 1	***?*** TWI bus connection blocked by an defective external bus user, for example a defective VisionBox or ....
F2 Display flashes		Incorrect display	***?*** The display AM03 (only for MPA 51) has been connected to the MPA 51xx. Correct: Use AM08 or AM09
F3 Display flashes		Password change for access level failed.	***?*** Incorrect password for the access level ***?*** Unlock key has not been pressed
10.2 Error from the basic system (0x01 to 0x3F)			
0x01	●	ERROR_INTERRUPT_CYCL_STATEFRAME	
0x02	●	ERROR_WD_TRIGGERING	
0x03	●	ERROR_WD_HARDWARE	
0x04		ERROR_UNLOCKING_DENIED	***?*** more than 5 unlockings in the last 15 minutes, remedy: Wait or carry out an Extended unlocking
0x05	●	ERROR_ROM_TEST	
0x06	●	ERROR_RAM_TEST	
0x07	●	ERROR_PINSHORTCIRCUIT	
0x08	●	ERROR_STACK_OVERFLOW	
0x09	●	ERROR_PROGRAMMING	
0x0A	●	ERROR_DI_VARIABLE	
0x0B	●	ERROR_IN_TABCONTROLERROR	
0x0C	●	not used	
0x0D	●	ERROR_CPU_TEST	
0x0E	●	ERROR_EEPROM_PARAMETER	
0x0F	●	ERROR_ADDRESS_TEST	
0x10	●	not used	
0x11		ERROR_UNDERVOLTAGE	***?*** The admissible lower voltage limit was not reached at least for a short time
0x12		ERROR_POWERFAILURE	***?*** The supply voltage was interrupted during startup, in the operation or during the regular switch-off
0x13		ERROR_WD_STATUS	***?*** The safety chain is not potential-free
0x14	●	ERROR_DI_SEGMENT_TEST	
0x15	●	ERROR_SFRREGISTER_TEST	
0x16		ERROR_TWI_COMMUNICATION	***?*** A user of the TWI bus must be connected to the bus or separated from the bus while the MPA was disconnected from the mains. Remedy: Connect or separate a user of the TWI bus only if the MPA is disconnected from the mains. ***?*** Too many users are connected to the TWI bus or EMC faults occur on the TWI line. Remedy: Use shorter lines or reduce the number of users
0x17	●	ERROR_STATEFRAME_OVERLOAD	
0x18		ERROR_EXTERNAL_APPLICATION	A switch-off has been activated by an external user, for example by selecting the function "Switch-off" in the PC software of the VisionBox

Old documentation - Only for your information! Product is not available anymore!

Printed in Germany • Edition 02.14 • Nr. 254 722

MPA 51xx

Error ID	Internal error	Error description	Possible cause of the error
0x19	●	not used	
0x1A	●	ERROR_SWWD_DURING_INITIALISATION	
0x1B	●	ERROR_BUFFEROVERFLOW	
0x1C	●	ERROR_SYNCHRONISATION_DURING_INITIALISATION	
0x1D	●	ERROR_PROCESSORFAILURE	? MPA is influenced by strong EMC interferences
0x1E	●	ERROR_SFRREGISTER_STATEBLOCK	
...		not used	
10.3 Error from the extended functions (0x40 to 0x9F)			
0x40		ERROR_FANDEFAULTS	? In the curve segment, a fan default is predefined, which is smaller than the minimum speed or higher than the maximum speed of the fan (P26 or P27). P26 (min. speed) is 500 U/min but the speed for modulation degree 0% is set to 480 rpm. Or P27 (max. speed) is set to 5600 rpm but the pre-aeration B should be carried out with 5800 rpm.
0x41		ERROR_FAN_DEVIATION	? The number of pulses in the fan feedback is set to an incorrect value ? The fan is not suitable for the desired speed ? The predefined tolerance is too low or the fan controller is not optimised
0x42		ERROR_FAN_NO_FEEDBACK	? The feedback line of the fan is not correctly connected or is interrupted ? The fan is blocked and does not work ? The fan is not supplied with power or is defective
0x43		ERROR_TEST_IONISATIONINPUT	
0x44		ERROR_CURVECRC16_TEST	? The curve segment was temporarily changed, for ex. for putting the MPA into operation, and was not correctly enabled later
0x45	●	ERROR_INVALID_MODULATIONDEGREE	? Modulation degree is outside the limits
0x46		not used	
0x47	●	ERROR_INVALID_STEPPEDMOTORTYPE	? Check stepped motor (compare P30)
0x48		ERROR_STEPPEDMOTOR_TOLERANCE_EXCEEDED	? The lines to the stepped motor are not correctly connected or partly interrupted ? The stepped motor is charged with more than the admissible torque, for example due to improper mounting of the flap or pressure impulses.
0x49		ERROR_STEPPEDMOTOR_REFERENCE_NOT_FOUND	? see error 0x48
0x4A		ERROR_STEPPEDMOTOR_NO_REACTION	? see error 0x48
0x4b		ERROR_PARAMETERRECORDSTICK_NOT_FOUND	? Parameter record activated but not plugged in the MPA ? Stick defective ? Duration of the standard mode (P70) is higher than 23 h 59 min and the continuous run is not enabled ? PWM outputs configured to analogue operation (0..10 V or 4...20 mA) but no suitable stick is plugged in.

Old documentation - Only for your information!
Product is not available anymore!

Printed in Germany • Edition 02.14 • Nr. 254 722

10 Error overview

MPA 51xx

Error ID	Internal error	Error description	Possible cause of the error
0x4C		ERROR_PARAMETER_RECORD_STICK_BLOCK_ADJUSTMENT	? A parameter could not be copied from the stick, for ex. because the variable limits in the MPA were confined.
0x4d		ERROR_PARAMETER_RECORD_STICK_INCORRECT_PASSWORD	? The entered password is not suitable for this stick
0x4E		ERROR_PARAMETER_RECORD_STICK_NO_CONTINUOUS_RUN	? Duration of the standard mode (P70) is higher than 23 h 59 min and the continuous run is not enabled
0x4F		ERROR_PARAMETER_RECORD_STICK_TYPE	? The stick does not fit with the type of automatic burner control
0x50	●	ERROR_FEEDBACK_ADDITION_INCORRECT	
0x51		ERROR_ADDITION_INVALID_DELAY	? Parameter P52 or P53 are set to an invalid value because the concerned state (P50 or P51) cannot have the set duration
0x52		not used	
0x53		ERROR_LACKOFGAS_GDWVPS	
0x54	●	ERROR_PWM_CALIBRATION_VALUES	? The EEPROM was changed or deleted when programming the parameter record stick ? Parameter record stick defective
0x55	●	ERROR_PARAMETER_RECORD_STICK_CRC_DATA	? Parameter record stick defective
...		not used	
10.4 Error from the application (from 0xA0)			
0xA0		ERROR_STATE_DURATION_TOO_LONG (Error fan and/or stepped motor)	? in the state 3, 16 and 23: The fan and/or the stepped motor cannot reach its nominal value within the expected time period ? other states: Internal error
0xA1		ERROR_FAN_STARTUP (Error fan and/or stepped motor)	? in the state 3, 16 and 23: The fan and/or the stepped motor cannot reach its nominal value within the expected time period ? other states: Internal error
0xA2		ERROR_SAFETY_CHAIN_OPEN	? The safety chain has been opened or is not closed ? The wires of the safety chain are interrupted
0xA3		ERROR_PARAMETER_RECORD_STICK_NO_PASSWORD	? The values in the MPA and in the parameter record stick are different. The requested password was not entered (timeout).
0xA4	●	ERROR_FEEDBACK_V1_INCORRECT	
0xA5	●	ERROR_FEEDBACK_V2_INCORRECT	
0xA6		ERROR_EXTERNAL_LIGHT	? Earth connection to an ionisation electrode ? Gas flows out and is burned for ex. by neighbouring burners ? Connected flame detector detects external light

Old documentation - Only for your information!
Product is not available anymore!

Printed in Germany • Edition 02.14 • Nr. 254 722

10 Error overview

MPA 51xx

Error ID	Internal error	Error description	Possible cause of the error
0xA7		ERROR_NO_FLAME_DURING_SZA	? Ionisation electrode incorrectly set ? Ignition electrodes incorrectly set ? Insulated lines of the ignition electrodes or the ionisation electrode defective ? Pneumatic composite incorrectly set / Incorrect gas type ? Gas valves do not open the gas flow ? Incorrect configuration of the curve points ? Connected flame detector (UV, ...) detects light or is defective ? Lines of mains connection on the MPA exchanged ("N" and "L1")
0xA8		ERROR_FLAME_GONE_OUT_DURING_OPERATION	? Gas supply or pneumatic composite are not set/suitable for high capacities ? Flame body defective ? Connected flame detector (UV, ...) detects no light or is defective
0xA9		ERROR_FLAME_GONE_OUT_DURING_STABILISATION	? see 0xA8, the problem occurs earlier.
0xAA		ERROR_IDLESTATECONTROL_LDW	? The air pressure detector is defective ? There is an air pressure during the idle state control, for ex. due to an air flow from the exhaust line,... ? The threshold value of the air pressure detector is set to an incorrect value
0xAB		ERROR_NO_AIR_PRESSURE	? the air pressure detector is incorrectly connected or defective ? the fan does not work ? the threshold value of the air pressure detector is set to an incorrect value
0xAC	●	ERROR_FEEDBACK_IGNITION_INCORRECT	
0xAD		ERROR_LACKOFGAS_GDWMIN	
0xAE		ERROR_VPS_V1_LEAKING	
0xAF		ERROR_VPS_V2_LEAKING	
0xB0	●	ERROR_TESTCIRCUIT_EXTENSION	
...		not used	

Old documentation - Only for your information! Product is not available anymore!

Printed in Germany • Edition 02.14 • Nr. 254 722

11 Display unit

11.1 Overview display modes

Mode	Active
Operational status display	in normal operation if no error is active
Error display	if the automatic burner control is in the fault switch-off phase
Info display	by pressing the key combination (+ and ↵) in state 1 or 35
Service display	by pressing the key combination (- and ↵) in state 1 or 35
Display of the error memory	by pressing the key combination (+ and ←) in state 1 or 35
Parameterising display	by pressing the key combination (↵ and ←) in state 1 or 35
Reset display	by pressing the key combination (- and ←) in the operational status display
Password entry Parameter record stick	if a new parameter record is to be copied
Flashing display	Option 1: Request to confirm the access level change Option 2: Keep the unlock key depressed for more than 5 s to restart the MPA

Old documentation - Only for your information!
Product is not available anymore!

11.2 Key assignment MPA 5111 and MPA 5112

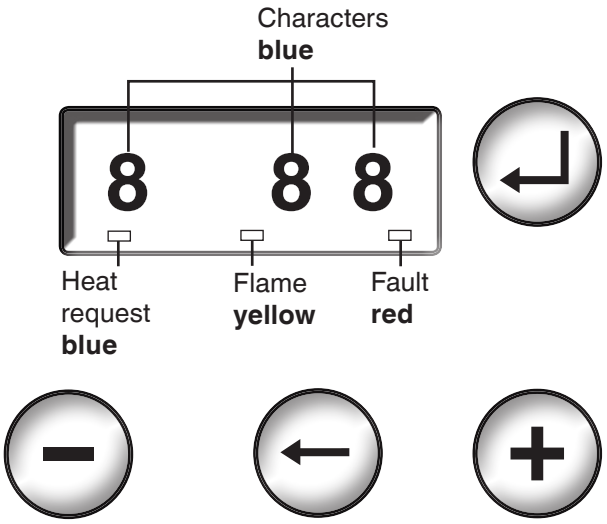

Old documentation - Only for your information!
Product is not available anymore!

Printed in Germany • Edition 02.14 • Nr. 254 722

11.4 Operational status display MPA5111



Display of the individual process states

Old documentation - Only for your information!
Product is not available anymore!

Printed in Germany • Edition 02.14 • Nr. 254 722

11.6 Error display

Error display	
►	**An error message is automatically displayed as soon as the automatic system goes to the fault lock system.**
►	**The error that has occurred last is displayed.**

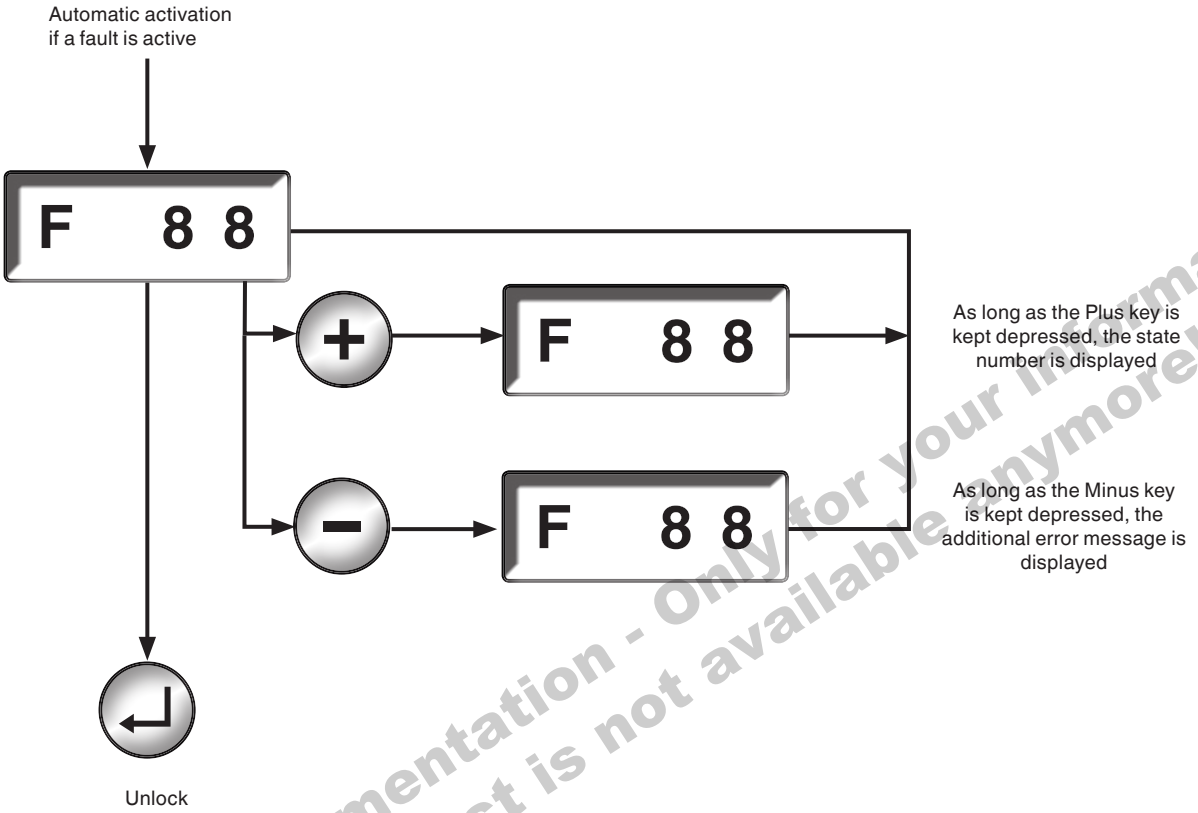

Old documentation - Only for your information! Product is not available anymore!

Printed in Germany • Edition 02.14 • Nr. 254 722

11.7 Information display

Info display	
►	**The info display is activated out of the operational status display.**
►	**Using the info display, information on the current counter reading such as start counter and permanent runtime meter can be called.**
►	**This operating mode is left after a timeout of 20 s if no key is pressed within this time period.**

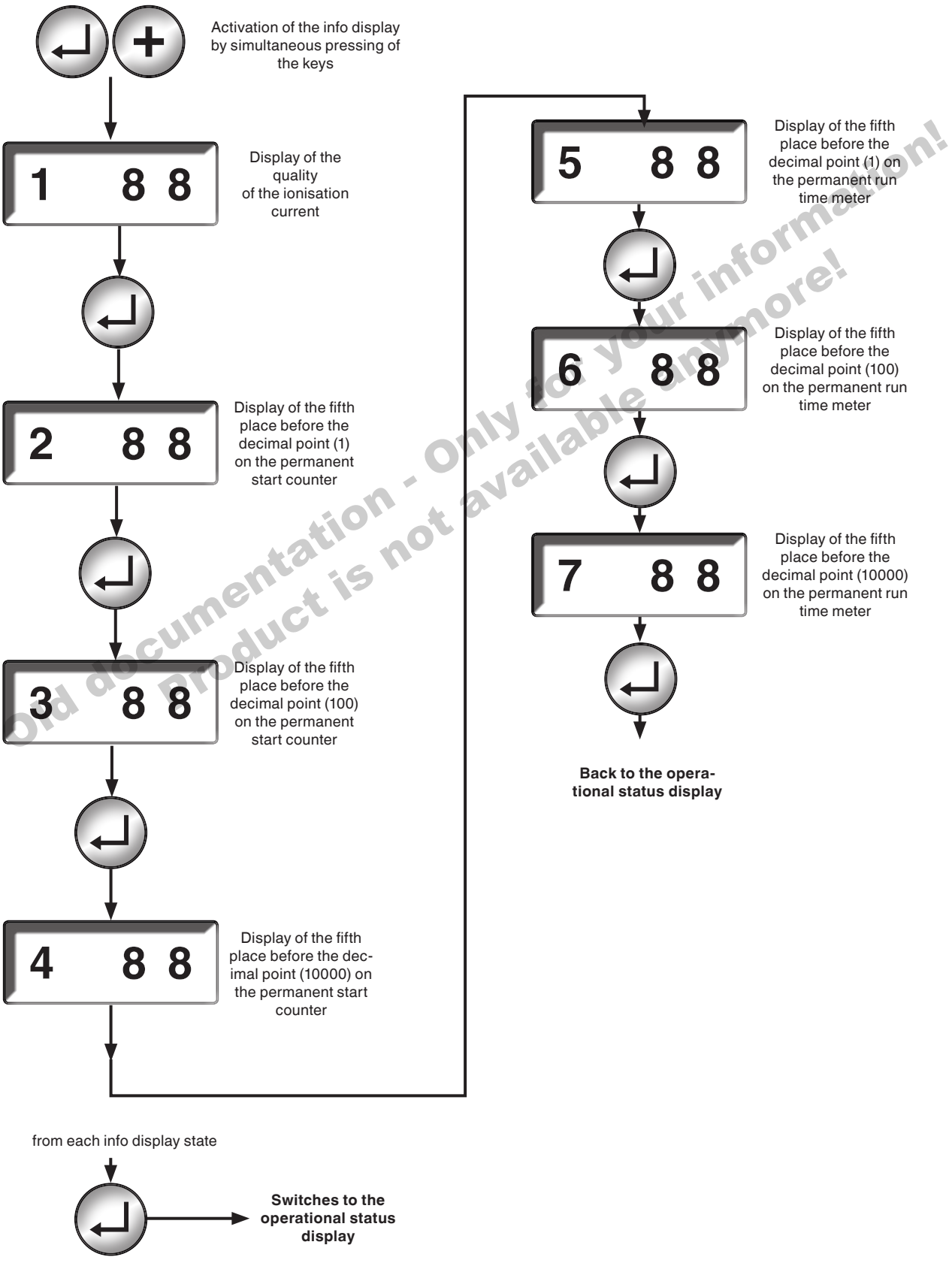

Old documentation - Only for your information! Product is not available anymore!

Printed in Germany • Edition 02.14 • Nr. 254 722

11.8 Service display

Service display	
►	**The service display is activated out of the operational status display.**
►	**The service display can only be activated in the burner mode.**
►	**A heat request must be active on the temperature controller input.**
►	**Power setting by means of the ± keys**
!!	**In this mode, the device does not react to the power setting signal of the inputs Power [+] and Power [-]**

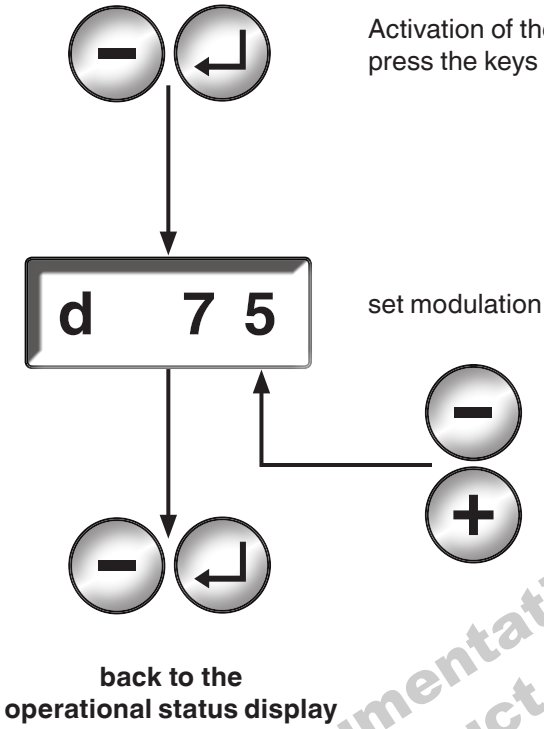

Activation of the service display:
press the keys simultaneously

set modulation percentage

Reduces the power

Increases the power

back to the operational status display

Old documentation - Only for your information!
Product is not available anymore!

Printed in Germany • Edition 02.14 • Nr. 254 722

Parameterisation display	
►	**The parameterisation display can only be activated when the standby mode on the operational state indicator is active.**
►	**The parameters which cannot be changed due to the access level are only displayed.**

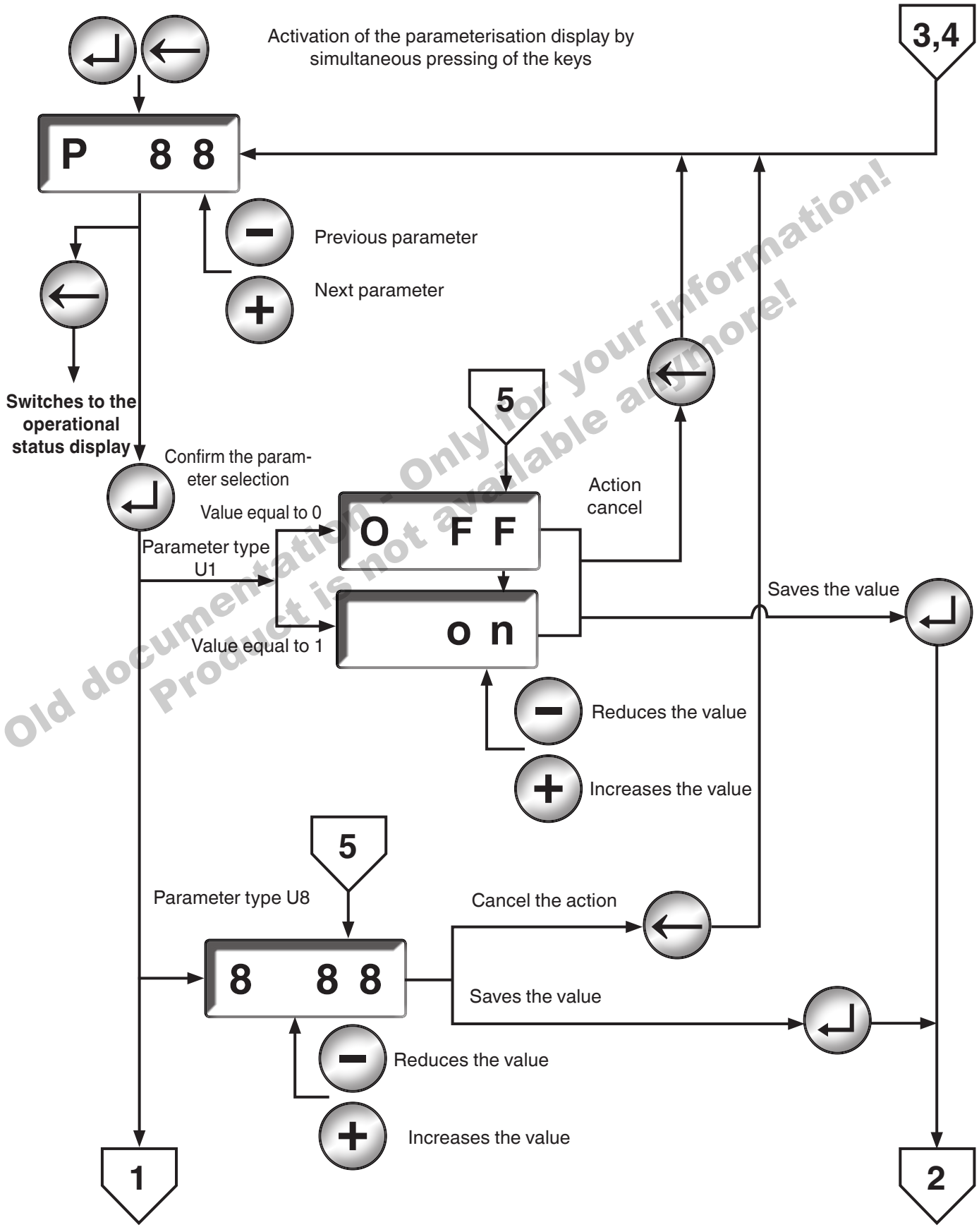

Old documentation - Only for your information! Product is not available anymore!

Printed in Germany • Edition 02.14 • Nr. 254 722

11.9 Parameterisation display

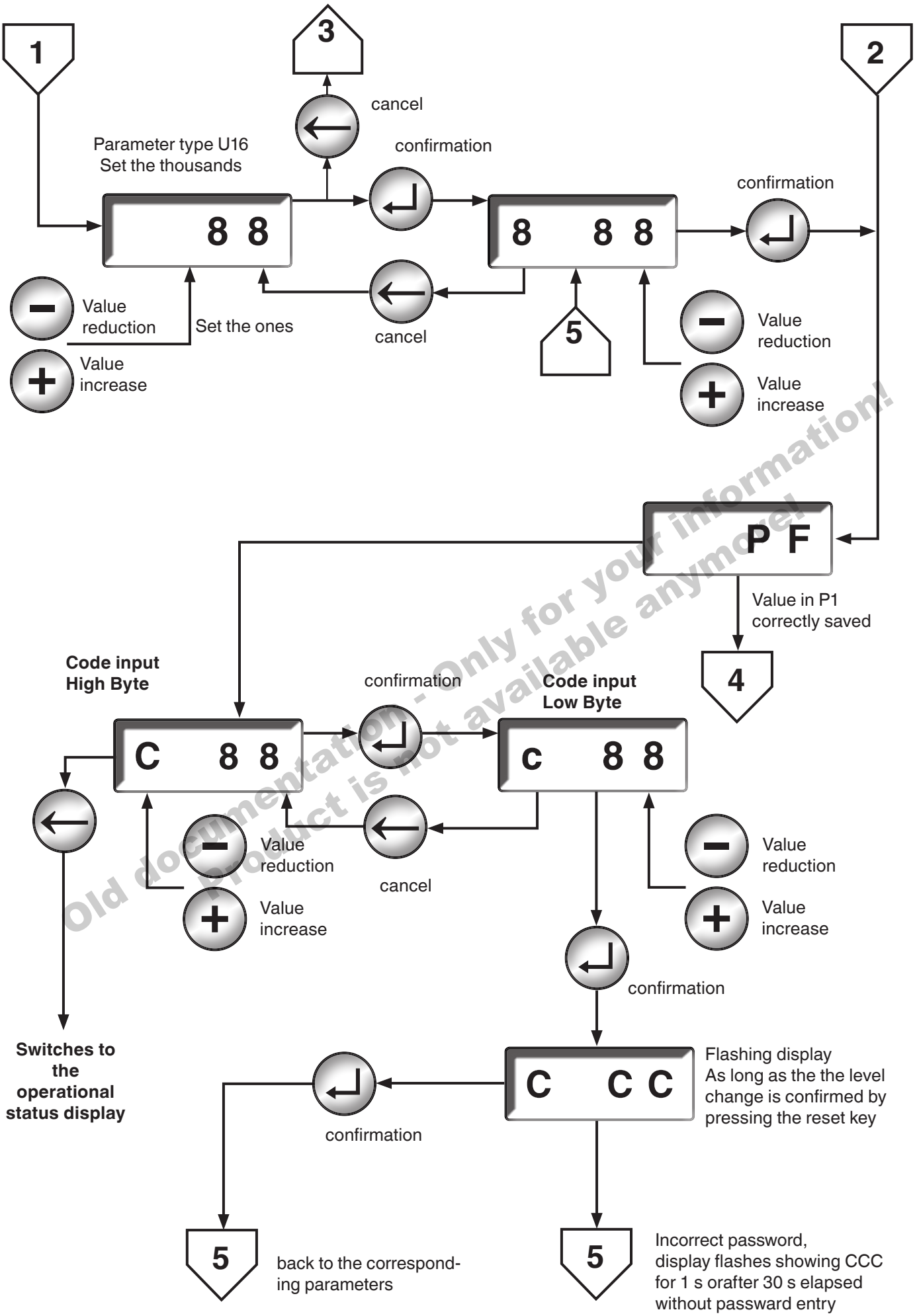

Old documentation - Only for your information!
Product is not available anymore!

Printed in Germany • Edition 02.14 • Nr. 254 722

11.10 Reset display

Reset display	
►	**The reset display is activated out of the operational status display.**
►	**The error memory, the access levels, resettable runtime meter and start counter can be reset by means of the reset display.**
►	**This operating mode is left after a timeout of 20 s if no key is pressed within this time period.**

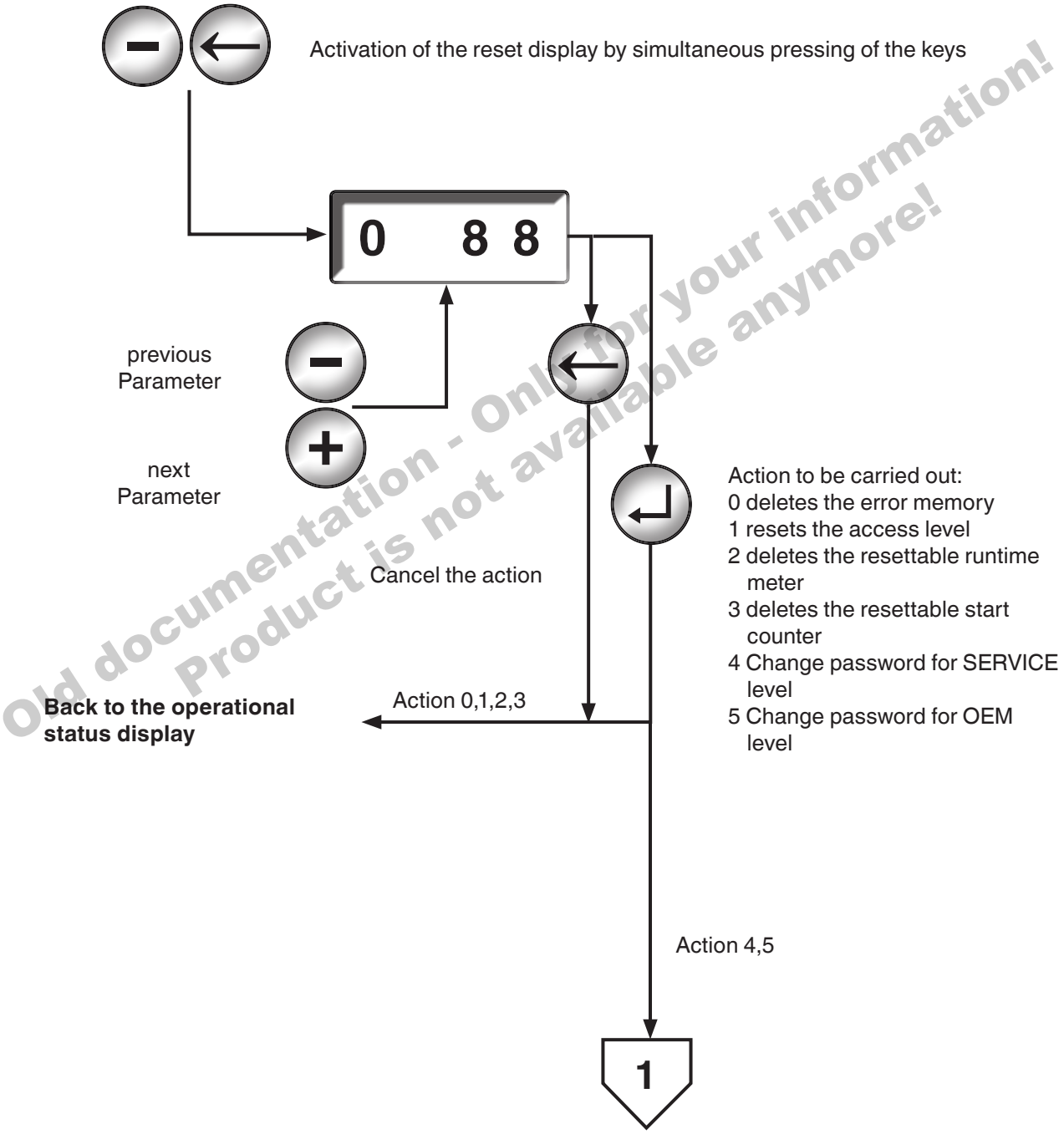

Old documentation - Only for your information! Product is not available anymore!

Printed in Germany • Edition 02.14 • Nr. 254 722

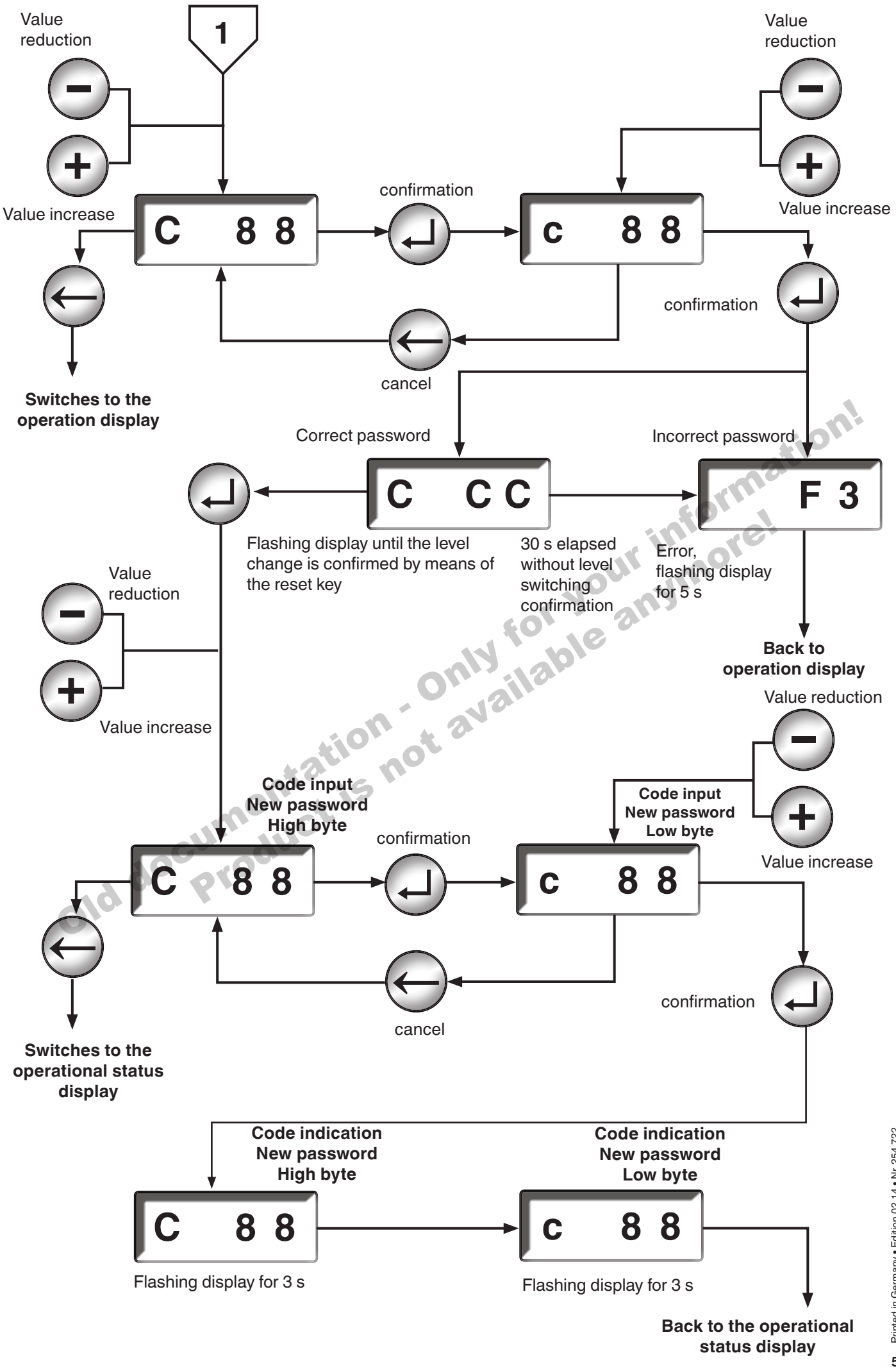

Old documentation - Only for your information! Product is not available anymore!

Printed in Germany • Edition 02.14 • Nr. 254 722

11.11 Error memory display

Display of the error memory	
►	The display of the error memory is used to call the last ten errors.
►	The error that has occurred last is displayed.
►	The error memory display is activated out of the operational status display.
►	This error memory display is left after a timeout of 20 s if no key is pressed within this time period.
►	The error that has occurred last is displayed.

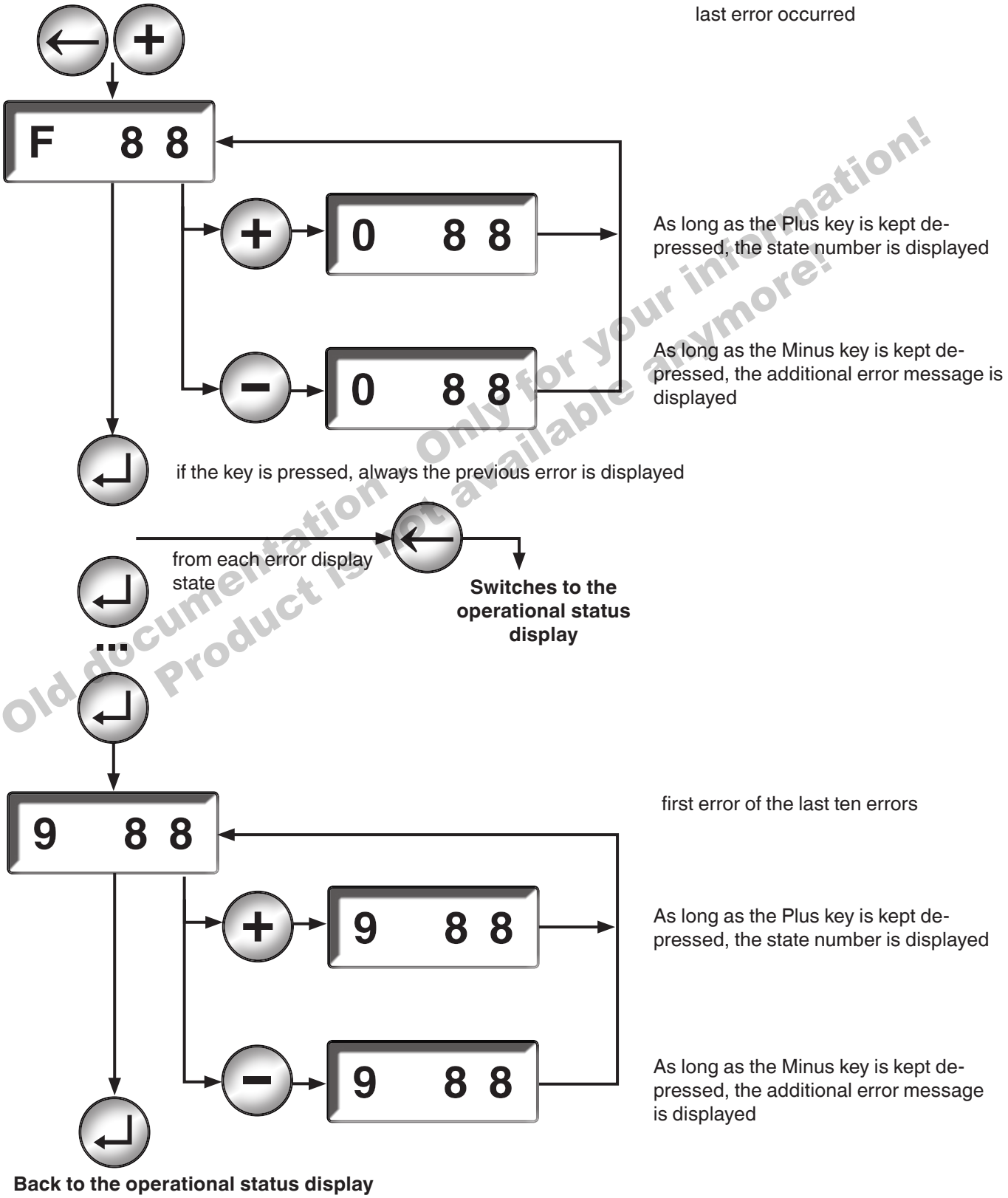

Old documentation - Only for your information!
Product is not available anymore!

Printed in Germany • Edition 02.14 • Nr. 254 722

11.12 Password entry parameter record stick

Password input for parameter stick	
►	**If the parameter values of the plugged-in parameter stick do not comply with the stored parameter values of the automatic system, a password must be entered before starting the automatic system. Then, the parameter values are copied.**
►	**After confirmation the automatic gas burner performs a restart.**
►	**If the password is not correctly entered, the automatic system switches, depending on the anti-oscillation counter, to the error status or returns to the password entry.**
►	**When the password entry is correct, the automatic system is restarted.**

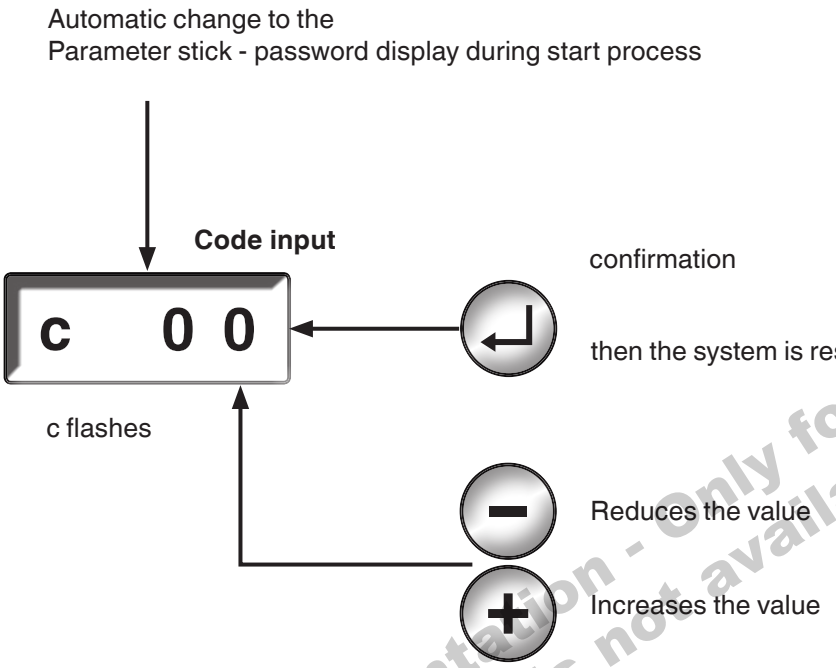

Old documentation - Only for your information!
Product is not available anymore!

Printed in Germany • Edition 02.14 • Nr. 254 722

12 VisionBox
The VisionBox is used to have access to the MPA via a PC.
See VisionBox

Old documentation - Only for your information!
Product is not available anymore!

Printed in Germany • Edition 02.14 • Nr. 254 722

13 Flame detector

The following flame detectors are approved by DUNGS and can be recommended for use in connection with the MPA51xx:

Manufacturer	Designation	Type	Output signal	Reaction time	Certificate	Continuous operation
-	Ionisation electrode	Ionisation	Ionisation	< 1 s		Yes
BST solutions DUNGS	KLC 1000 FLW 20	UV tube	Ionisation	(1 s + 0.5 s) = < 1.5 s	Yes	No
BST solutions DUNGS	KLC 2000 FLW 10	Flicker detector with frequency analysis	Ionisation	(1 s + 0.5 s) = < 1.5 s	Yes	No

DUNGS has the following requirements to flame detectors used with the MPA51xx:

1. Approval and certification by the respective bodies (DVGW, DIN Certco,...) must be ideally provided.
   An independent prove about the compliance with the respective demands of the DIN EN298 is required.
2. The ionisation behaviour of a flame must be simulated (rectifier effect)
3. The following values are active on the ionisation input and output
   230 VAC +10 % -15 %
   The internal resistance of the MPA is approx 1 MΩ. For safety reasons, the flame sensor must work properly also with an internal resistance of 360 kΩ.
4. Under these conditions, the simulation circuit in the flame detector must reach at least a direct current 3 µA.
   If an alternating current with a DC component is simulated, the DC component should reach at least 25%.
   The current can be derived to N, PE or returned to N on the MPA.
5. The supply voltage for the flame detector must be tapped off at the output ION_PWR of the MPA51xx (230 VAC, max. 1 A).
6. The reaction times must be observed!
   Total reaction time = reaction time MPA + reaction time flame detector
   The reaction time of the MPA is < 1 s
7. The EMC regulations must be observed (EN 298). The entire system must not represent inadmissible emissions.
8. The MPA51xx is not decoupled. The polarity of the MPA and the flame detector must be strictly observed.
9. Prior to use a flame sensor which is not included in the list, please contact DUNGS. DUNGS cannot be held liable if the flame detector and the automatic burner control do not work orderly together. Especially if the electromagnetic behaviour is not according to the regulations or if the time dependent behaviour is not correct.

For a good flame detection the flame signal has to be considered during configuration of the burner.
The LED of the flame on the display must not be flashing and the displayed signal in the VisionBox application must have more than 40 digits.

Old documentation - only for your information!
Products not available anymore!

Printed in Germany • Edition 02.14 • Nr. 254 722

14 Stepped motor

14.1 Overview of the possible stepped motor types

SAD 15	SAD 1.2 WG SAD 3.0 WG SAD 10 WG [*1]	SAD 1.5 SAD 3.0 (IP 40)	SAD 1.2







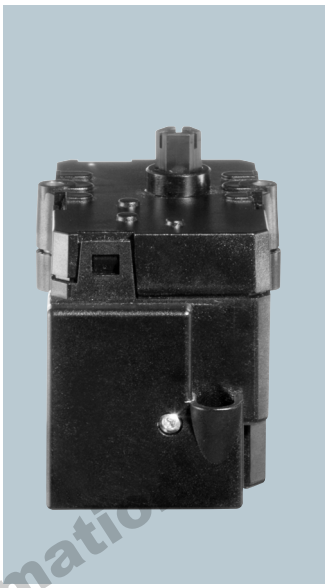

14.2 Reference point "Standard"

The rotation ranges are indicated

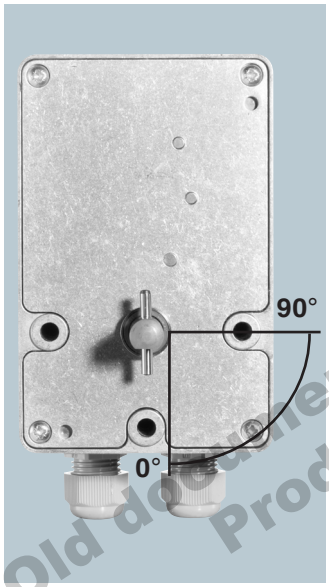

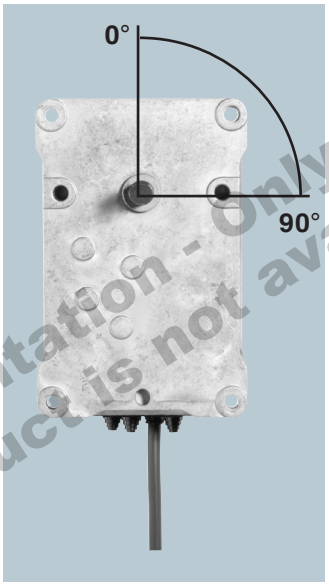

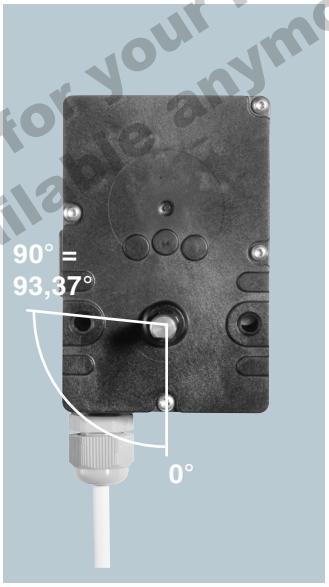

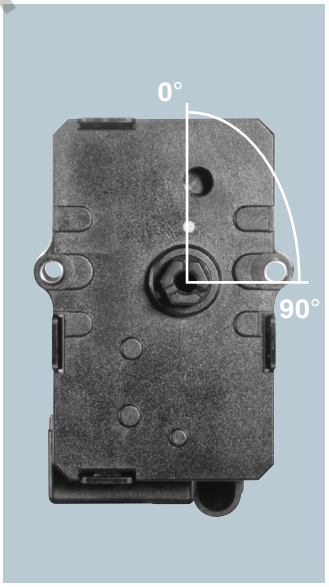

Old documentation - Only for your information!
Product is not available anymore!

14.3 Reference point "Exchanged"

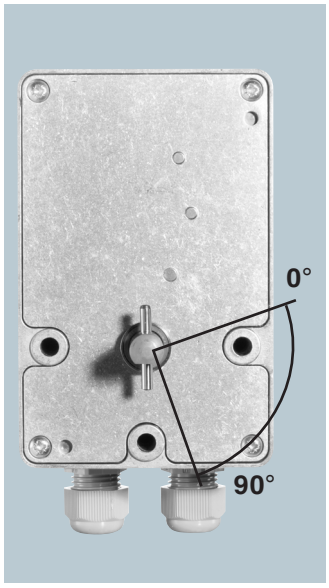

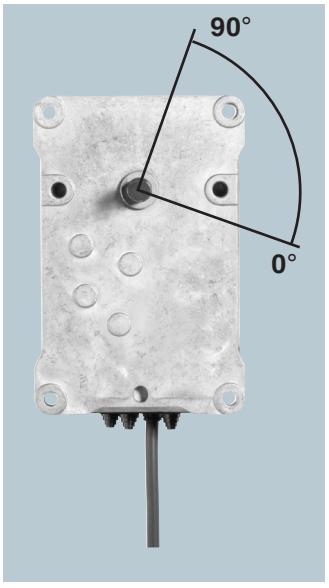

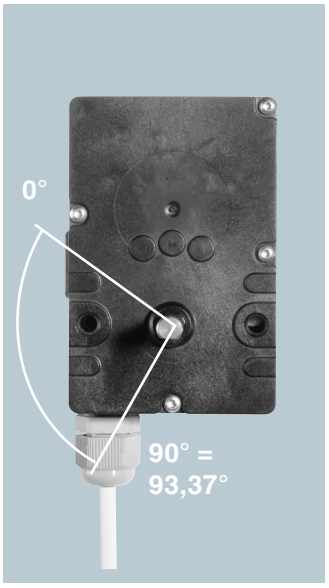

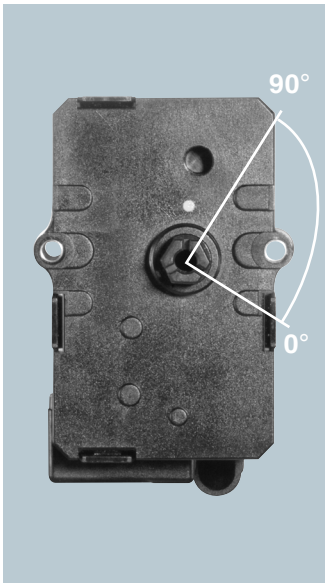

Printed in Germany • Edition 02.14 • Nr. 254 722

[1*] this version is not yet available

14.4 Mathematical angle positions
The mathematical angle position is indicated in the view from the bottom on the driven shaft as shown in the pictures above.
The mathematical angle position of the stepped motor position 0° or 90° for the respective stepped motor type is indicated in the following table:

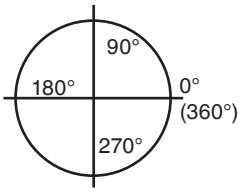

0° / 90° correspond to:

	SAD 15	SAD 1.2 WG SAD 3.0 WG SAD 10 WG*1	SAD 1.5 SAD 3.0 (IP 40)	SAD 0.6 SAD 1.2
Reference point "Standard":	270° / 0°	90° / 0°	270° / 166,63°	90° / 0°
Reference point "Exchanged":	19° / 289°	81,5° / 341,5°	156,92° / 250,29°	341° / 71°

*1 : this version is not yet available

Attention!
All stepped motors must be equipped with two mechanical stops.

- Lower mechanical stop between -7° and -10°
- Upper mechanical stop between 92° and 95° or upper mechanical stop between 95,5° and 98,5° for SAD1.5 and SAD3.0 (IP 40)

The absolute stop positions depend on the stepped motor and the selected reference point (see table).

Old documentation - Only for your information!
Product is not available anymore!

Printed in Germany • Edition 02.14 • Nr. 254 722

14.5 Wiring diagram SAD15
Power supply

PIN designation in the SAD 15	230 V mains power supply or MPA output 6
L	L1
N	N

Signal lines SAD15

PIN designation in the SAD 15	230 V mains power supply or MPA output 6
1	6
2	5
3	not used
4	2
5	4
6	3
not used	1

Connection SAD15

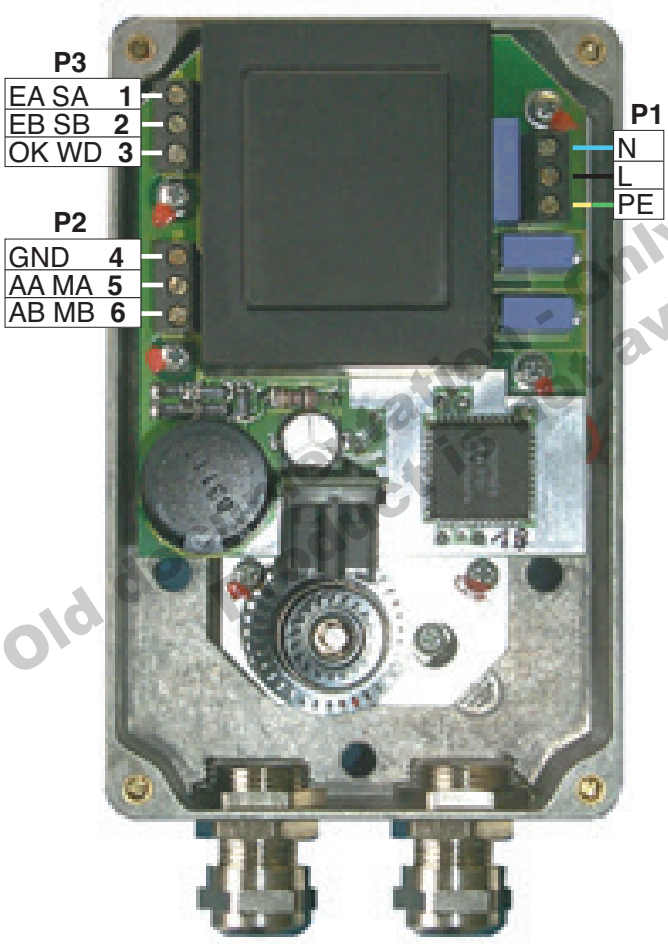

Old documentation - only for your information!
Product is not available anymore!

Printed in Germany • Edition 02.14 • Nr. 254 722

14.6 Power supply of the stepped motors

Stepped motor	230 V (L1) Mains power supply	24 V by means of a separate power supply unit	24 V via MPA5111
SAD 1.2	-	X (> 7W)	X
SAD 1.2 WG	-	X (> 7.5W)	X
SAD 1.5	-	X (> 7W)	X
SAD 3.0 (IP40)	X	-	-
SAD 3.0 WG	-	X (> 10W)	X
SAD 10 WG *1	-	X (> 10W)	?
SAD 15	X	-	-

*1 this version is not yet available

Old documentation - Only for your information!
Product is not available anymore!

Printed in Germany • Edition 02.14 • Nr. 254 722

Old documentation - Only for your information!
Product is not available anymore!

Printed in Germany • Edition 02.14 • Nr. 254 722

15 Time diagram MPA51xx

	by means of an extended module	General version	Viessmann version	Error	Waiting for heat request	Waiting for parameter record stick adjustment	Idle state control: Fan/stepped motor	Idle state control LDW (air pressure switch)	Watchdog loading phase	Startup phase: Fan/stepped motor	Waiting for air pressure	VPS A: Decision	VPS A : Emptying the area between the valves	VPS A: Test time V1	VPS A: Filling the area between the valves	VPA A: Gas pressure detection	VPS A: Test time V2	Pre-aeration A
Parameter												P40	P42	P43	P44		P45	P60
Time				0...	0...	max. 3 min	max. 2 min	max. 2 min	3 s	max. 2 min	max. 30 s	0.1 s	1...3 s	1...240 s	1...3 s	0.1 s	1...240 s	0...1 h
State number				0	1	2	3	4	5	6	7	8	9	10	11	12	13	14
Safety chain																		
Watchdog																		
Alarm																		
Temperature controller																		
Additional valve *4		Y1	Y3															
V1		Y2	Y1															
V2		Y3	Y2															
Ignition																		
Fan relay																		
PWM1 (fan)				*2a					*2b									
PWM2 (for ex. analogue 0...10 V)	●			*2a					*2b									
PWM3 (for ex. analogue 4... 20 mA)	●			*2a					*2b									
Stepped motor	●			*2a					*2b									
Flame (ionisation)																		
LDW *1																		
GDW min.																		
GDW VPS *5																		
Parameter record stick active	●																	
Parameter VPS Startup																		
Parameter VPS Regular switch-off																		

Old documentation - Only for your information! Product is not available anymore!

*1) The monitoring of the LDW depends on the operating mode set in P14.

*2) Analogue and fan capacities as well as fan speed can be set by means of curves.

a) Special modulation point: OFF
b) Special modulation point: Pre-aeration A
c) Special modulation point: Pre-aeration B
d) Special modulation point: Ignition position
e) Special modulation point: STA
f) Special modulation point: Stabilisation A
g) Special modulation point: Stabilisation B
h) Parameter P67: Start modulation degree Standard mode
i) Parameter P81: Regular switch-off: Power during transition
j) Special modulation point: Post-aeration

*3) In the waiting program state, the first waiting time is 2 minutes, then 5 minutes, then 1 hour and afterwards a time period which can be set by means of a parameter between 1 minute and 50 hours. If the set time period is smaller than the first three intervals, these are also reduced. Another parameter indicates whether a fault switch-off is allowed and, if yes, how many restart attempts are to be carried out until the automatic burner control

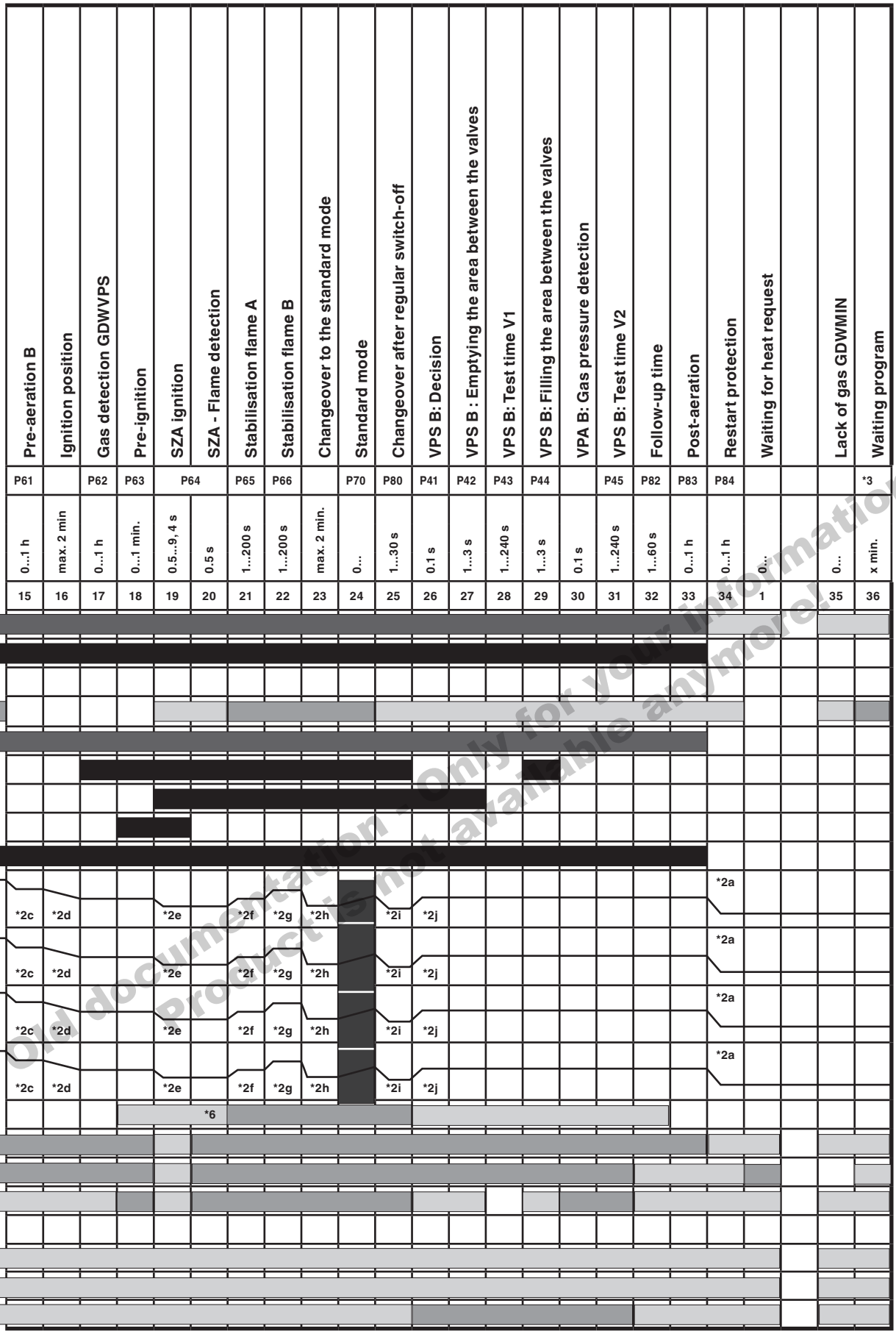

Old documentation - Only for your information!
Product is not available anymore!

goes to the fault switch-off. The waiting program state is triggered by a lack of gas or an open safety chain.

*4) The start help valve can be switched on and off at any time (parameter). However it must be activated with the beginning of the state "Waiting for gas pressure" at the earliest and during the valve test after a regular switch-off at the latest.

*5) The GDW VPS is monitored during the valve test. Additionally, the parameter P46 can define whether the minimum pressure monitoring via GDWVPS during operation between state 17 and state 25 is active or not.

*6) The flame is detected here and must be generated in this state at the latest.

Appendix A
Versions and variants

MPA5111	**V1.0**	**251446 D**	**251547 _**	**51 1**
	V1.1	**251446 E**	**251547 A**	**51 2**

Changes from V1.0 to V1.1

1. The V1.1 version corresponds to VDE EN60335-1 section 30 of 2007.

2. The passwords for OEM and SERVICE levels can be changed now.

3. Preparations for connection of Profibus modules.

4. Simplifications for parameter changing procedure.

Old documentation - Only for your information!
Product is not available anymore!

Printed in Germany • Edition 02.14 • Nr. 254 722

Appendix B
Parameter overview

Parameter	Name	DUNGS Auslieferung	Einheit	Bedeutung	Einstellwerte Min	Einstellwerte Max	Zugriffsebene
10	PARAMETER_STICK_AKTIV	AUS		Parameterstick: aktiv			OEM
11	ANZAHL_WIEDERANLAUFVERSUCHE	5		Wiederanlaufversuche	0	10	OEM
12	ANZAHL_WIEDERANLAUFVERSUCHE_NACH_FEHLER_KEINE_FLAMME_WAEHREND_SZA	0		Wiederanlaufversuche nach fehlender Flammenbildung	0	10	OEM
13	ANZAHL_WIEDERANLAUFVERSUCHE_NACH_FEHLER_FLAMMENABRISS_IM_BETRIEB	0		Wiederanlaufversuche nach Flammenabriss	0	10	OEM
14	BETRIEBSART_LDW	0		LDW: Betriebsart	0	3	OEM
15	BETRIEBSART_TEMPERATURREGLER	3		Temperaturregler: Betriebsart	0	255	BETREIBER
16	PARAMETERSATZ_KUNDEN_ID	0		Parametersatz: Kundennummer	0	255	DUNGS
17	PARAMETERSATZ_SATZ_ID	0		Parametersatz: Nummer	0	255	DUNGS
18	BETRIEBSART_PWM_AUSGAENGE	0		Analogausgänge: Betriebsart	0	15	SERVICE
20	GEBLAESE_REGELSCHALTER	AUS		Gebläse: Regelung			OEM
21	GEBLAESE_RAMPE_VERZOEGERUNG	1		Gebläse: Verzögerung/Rampe	0	10	OEM
22	GEBLAESE_KP	50		Gebläse: Kp-Faktor	0	160	OEM
23	GEBLAESE_TN	50		Gebläse: Tn-Faktor	1	160	OEM
24	GEBLAESE_PULSZAHL	2	1/U	Gebläse: Pulse pro Umdrehung	1	10	SERVICE
25	GEBLAESE_ZULAESSIGE_TOLERANZ	500	0,01%	Gebläse: zulässige Toleranz	0	3000	OEM
26	GEBLAESE_DREHZAHL_MIN	2000	U/min	Gebläse: Drehzahl min.	1	10000	SERVICE
27	GEBLAESE_DREHZAHL_MAX	10000	U/min	Gebläse: Drehzahl max.	500	10000	SERVICE
30	SCHRITTMOTOR_TYP	0		Schrittmotor: Typ	0	11	SERVICE
31	SCHRITTMOTOR_ZULAESSIGE_TOLERANZ	300	0,01Grad	Schrittmotor: zulässige Toleranz	0	500	OEM
40	VPS_ANLAUF_AKTIV	AUS		VPS: aktiv im Anlauf			OEM
41	VPS_ABSCHALTUNG_AKTIV	AUS		VPS: aktiv bei Abschaltung			OEM
42	DAUER_VPS_ZWISCHENRAUM_LEEREN	16	1/16 s	VPS: Dauer Zwischenraum leeren	0	48	OEM
43	DAUER_VPS_PRUEFZEIT_V1	160	1/16 s	VPS: Prüfzeit Ventil 1	0	9600	OEM
44	DAUER_VPS_ZWISCHENRAUM_FUELLEN	16	1/16 s	VPS: Dauer Zwischenraum füllen	0	48	OEM
45	DAUER_VPS_PRUEFZEIT_V2	160	1/16 s	VPS: Prüfzeit Ventil 2	0	9600	OEM
46	GDWVPS_ALS_MINUEBERWACHUNG	AUS		GDWVPS: Mindrucküberwachung aktiv			OEM

Old documentation - Only for your information
Product is not available anymore!

Printed in Germany • Edition 02.14 • Nr. 254 722

Parameter	Name	DUNGS Auslieferung	Einheit	Bedeutung	Einstellwerte Min	Max	Zugriffsebene
50	ZUSATZVENTIL_EINSCHALT-STATE	22	State	Zusatzventil: Einschaltstate	6	33	OEM
51	ZUSATZVENTIL_AUSSCHALT-STATE	22	State	Zusatzventil: Ausschaltstate	6	33	OEM
52	ZUSATZVENTIL_EIN-SCHALTVERZOEGERUNG	0	1/16 s	Zusatzventil: Einschaltverzögerung	0	65535	OEM
53	ZUSATZVENTIL_AUSS-CHALTVERZOEGERUNG	0	1/16 s	Zusatzventil: Ausschaltverzögerung	0	65535	OEM
60	DAUER_VORBELUEFTUNG_A	960	1/16 s	Vorbelüftungszeit A	0	65534	OEM
61	DAUER_VORBELUEFTUNG_B	0	1/16 s	Vorbelüftungszeit B	0	65534	OEM
62	DAUER_GASDETEKTION_GD-WVPS	0	1/16 s	Dauer Gasdetektion Anlauf	0	160	OEM
63	DAUER_VORZUENDUNG	4	1/16 s	Vorzündzeit	2	65534	OEM
64	DAUER_SZA	16	1/16 s	Sicherheitszeit Anlauf	16	160	OEM
65	DAUER_STABILISIERUNG_ FLAMME_A	80	1/16 s	Stabilisierungszeit A	0	65534	OEM
66	DAUER_STABILISIERUNG_ FLAMME_B	0	1/16 s	Stabilisierungszeit B	0	65534	OEM
67	STARTMODULATIONSGRAD_ REGELBETRIEB	3000	0,01%	Modulationsgrad bei Start Regelbetrieb	0	10000	SERVICE
70	DAUER_REGELBETRIEB	1439	min	Dauer Regelbetrieb	0	65535	OEM
71	MODULATIONSGRAD_NEUER_ SOLLWERT	65535	0,01%	Modulationsgrad: neuer Sollwert	0	65535	BETREIBER
72	ART_MODULATIONSGRADAE-NDERUNG	1		Modulationsgrad: Art der Änderung	0	3	SERVICE
73	SCHRITTWEITE_MODULA-TIONSGRADAENDERUNG	100	0,01%	Modulationsgrad: Schrittweite der Änderung	0	10000	SERVICE
74	INTERVALL_ANALOGWERTUE-BERNAHME	240	1/16 s	Modulationsgrad: Intervall Analogwertübernahme	1	65535	OEM
75	MODULATIONSGRAD_UNTER-GRENZE	0	0,01%	Modulationsgrad: Untergrenze	0	10000	SERVICE
76	MODULATIONSGRAD_OBER-GRENZE	10000	0,01%	Modulationsgrad: Obergrenze	0	10000	SERVICE
80	DAUER_UEBERGANG_NACH_ REGELABSCHALTUNG	0	1/16 s	Regelabschaltung: Übergangszeit	0	65534	OEM
81	MODULATIONSGRAD_UEBER-GANG_NACH_REGELAB-SCHALTUNG	3000	0,01%	Modulationsgrad bei Regelabschaltung	0	10000	OEM
82	DAUER_NACHBRENNZEIT	160	1/16 s	Nachbrennzeit	9	65534	OEM
83	DAUER_NACHBELUEFTUNG	160	1/16 s	Nachbelüftungszeit	0	65534	OEM
84	DAUER_WIEDEREINSCHALT-SPERRE	80	1/16 s	Wiedereinschaltsperrzeit	0	65534	SERVICE
90	WARTEPROGRAMM_ANZAHL_ WIEDERANLAUFVERSUCHE	255	Anzahl	Warteprogramm: Anzahl Wiederanlaufversuche	0	255	SERVICE
91	DAUER_WARTEPROGRAMM	120	min	Warteprogramm: Dauer	1	65534	SERVICE
100	KUNDENSPEZIFISCH_OEM_0	0		Kundespezifisch: OEM 0	0	65535	OEM
101	KUNDENSPEZIFISCH_OEM_1	0		Kundespezifisch: OEM 1	0	65535	OEM

Old documentation ! Only valid for information!
Product is not available anymore!

Printed in Germany • Edition 02.14 • Nr. 254 722

Para-meter	Name	DUNGS Aus-lieferung	Einheit	Bedeutung	Einstellwerte Min	Max	Zugriffs-ebene
102	KUNDENSPEZIFISCH_OEM_2	0		Kundespezifisch: OEM 2	0	65535	OEM
103	KUNDENSPEZIFISCH_OEM_3	0		Kundespezifisch: OEM 3	0	65535	OEM
104	KUNDENSPEZIFISCH_OEM_4	0		Kundespezifisch: OEM 4	0	65535	OEM
105	KUNDENSPEZIFISCH_BE-TREIBER_0	0		Kundespezifisch: Betreiber 0	0	65535	BETREIBER
106	KUNDENSPEZIFISCH_BE-TREIBER_1	0		Kundespezifisch: Betreiber 1	0	65535	BETREIBER
107	KUNDENSPEZIFISCH_BE-TREIBER_2	0		Kundespezifisch: Betreiber 2	0	65535	BETREIBER
108	KUNDENSPEZIFISCH_BE-TREIBER_3	0		Kundespezifisch: Betreiber 3	0	65535	BETREIBER
109	KUNDENSPEZIFISCH_BE-TREIBER_4	0		Kundespezifisch: Betreiber 4	0	65535	BETREIBER
230	RESERVIERT_BETRIEBSART_BRENNSTOFF	0		Reserviert: Betrieb-sart Brennstoff	0	255	BETREIBER
240	RESERVIERT_OEM_0	0		Reserviert: OEM 0	0	65535	OEM
241	RESERVIERT_OEM_1	0		Reserviert: OEM 1	0	65535	OEM
242	RESERVIERT_OEM_2	0		Reserviert: OEM 2	0	65535	OEM
243	RESERVIERT_OEM_3	0		Reserviert: OEM 3	0	65535	OEM
244	RESERVIERT_OEM_4	0		Reserviert: OEM 4	0	65535	OEM
245	RESERVIERT_BETREIBER_0	0		Reserviert: Betreiber 0	0	65535	BETREIBER
246	RESERVIERT_BETREIBER_1	0		Reserviert: Betreiber 1	0	65535	BETREIBER
247	RESERVIERT_BETREIBER_2	0		Reserviert: Betreiber 2	0	65535	BETREIBER
248	RESERVIERT_BETREIBER_3	0		Reserviert: Betreiber 3	0	65535	BETREIBER
249	RESERVIERT_BETREIBER_4	0		Reserviert: Betreiber 4	0	65535	BETREIBER

Old documentation - Only for your information!
Product is not available anymore!

Printed in Germany • Edition 02.14 • Nr. 254 722

Old documentation - Only for your information!
Product is not available anymore!

DUNGS®
Combustion Controls

www.dungs.com

Old documentation - Only for your information!
Product is not available anymore!

Karl Dungs GmbH & Co. KG
Siemensstraße 6–10
D-73660 Urbach, Germany
Telefon +49(0)7181-804-0
Telefax +49(0)7181-804-166
info@dungs.com
www.dungs.com