elco

SPARE PARTS EXPLODED VIEW
GAS BURNERS
Model
CB-VG6DP R /TC (50/60Hz)

R8220157-02 - 20/07/2016

Col	Reference	Model type	Begin	End
1	3834744	BB-VG6.1600 DP R / TC	07-2015	-
2	3834746	BB-VG6.1600 DP R / TC 60HZ	10-2015	-
3	3834745	BB-VG6.2100 DP R / TC	09-2015	-
4	3834747	BB-VG6.2100 DP R / TC 60HZ	10-2015	-
5	3835829	CH-G0732 – T1/KN	01-2016	-
6	3835830	CH-G0732 – T2/KL	01-2016	-
7	3835831	CH-G0732 – T3/KM	01-2016	-
8	3835832	CH-G0733 – T1/KN	01-2016	-
9	3835833	CH-G0733 – T2/KL	01-2016	-
10	3835834	CH-G0733 – T3/KM	01-2016	-
11	3833486	GT - d334 - 1"1/4-Rp2" /TC	09-2011	-
12	3833487	GT - d335 - 1"1/2-Rp2" /TC	09-2011	-
13	3833490	GT -s317 - 2"-Rp2" /TC	09-2011	-
14	3833489	GT -s316 - 65-DN65 /TC	10-2011	-
15	3833488	GT -s315 - 80-DN80 /TC	11-2011	-

ООО Промэлектроника
sales@prom-elec.com

1000

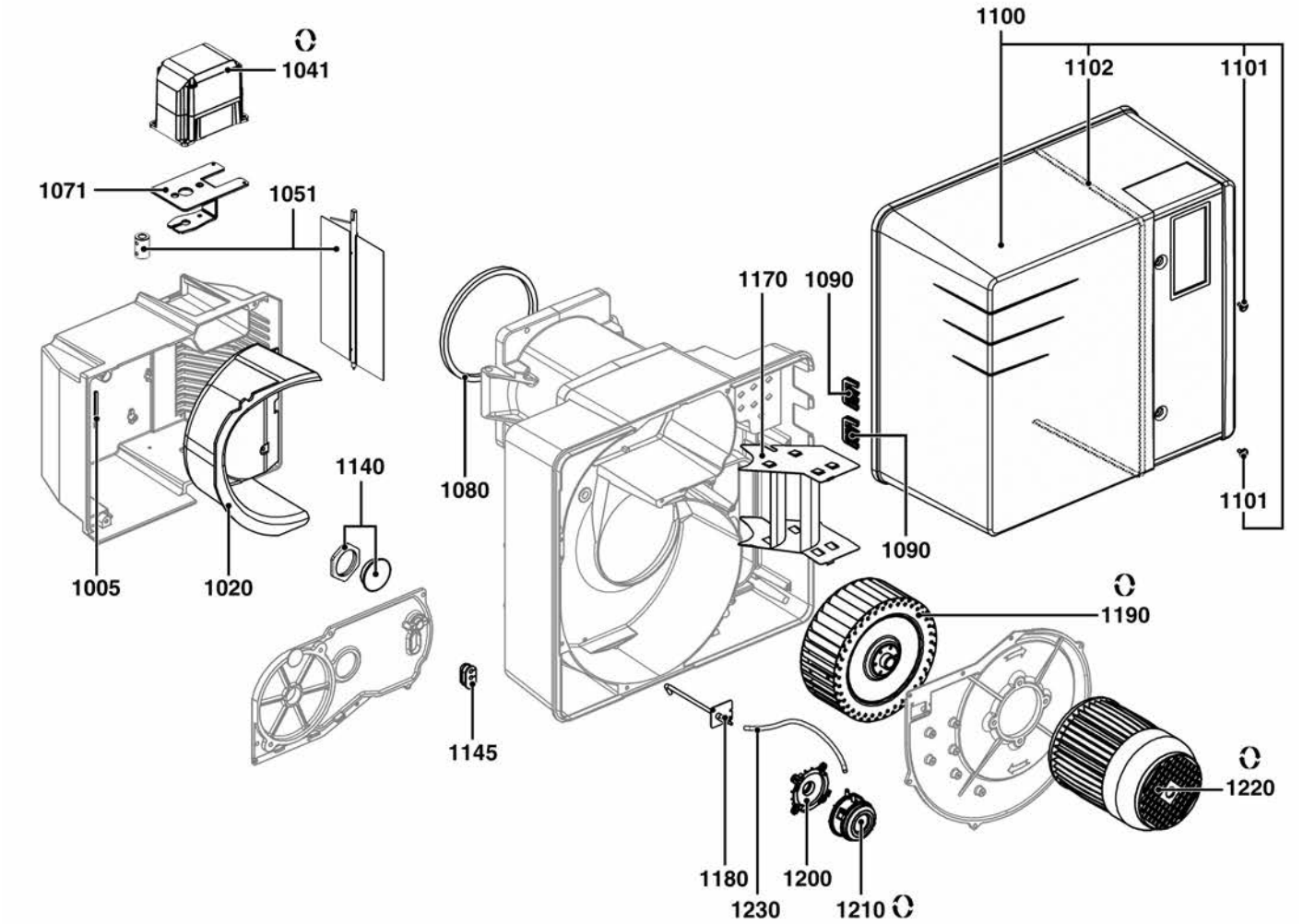
1041
1071
1051
1100
1102
1101
1170
1090
1080
1140
1005
1020
1090
1101
1190
1145
1220
1180
1200
1230
1210

1500

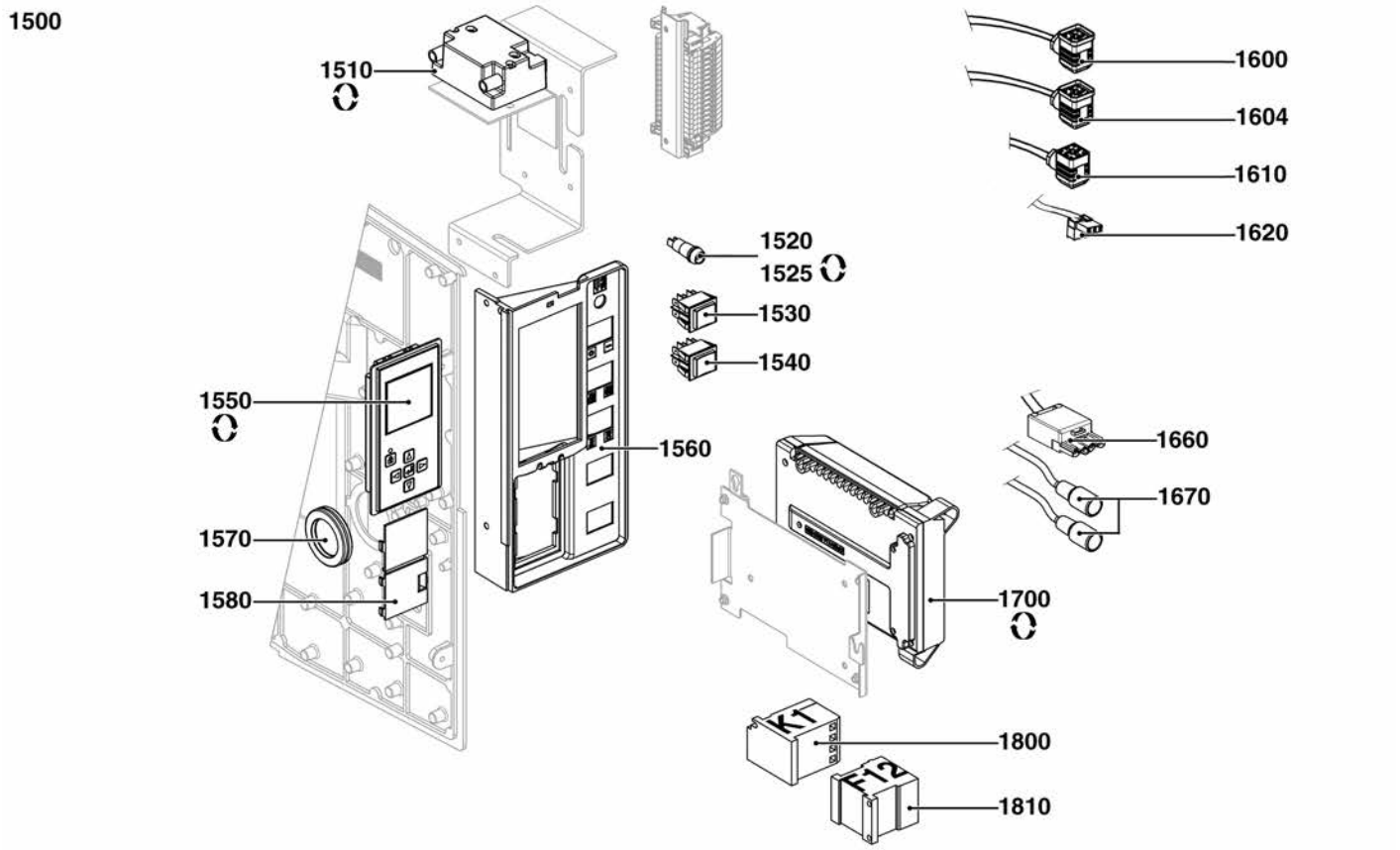
1510
1600
1604
1610
1620
1520
1525
1530
1540
1550
1560
1660
1670
1570
1580
1700
K1
1800
F12
1810

	Description	Manf. Pt. N	Type	1 BB-VG6.1600 DP R / TC	2 BB-VG6.1600 DP R / TC 60HZ	3 BB-VG6.2100 DP R / TC	4 BB-VG6.2100 DP R / TC 60HZ	5 CH-G0732 – T1/KN	6 CH-G0732 – T2/KL	7 CH-G0732 – T3/KM	8 CH-G0733 – T1/KN	9 CH-G0733 – T2/KL	10 CH-G0733 – T3/KM	11 GT - d534 - 1"1/4-Rp2" /TC	12 GT - d535 - 1"1/2-Rp2" /TC	13 GT -s317 - 2"-Rp2" /TC	14 GT -s316 - 65-DN65 /TC	15 GT -s315 - 80-DN80 /TC	16	17	18	From	to
1000	BURNER BODY																						
1005	AIR BOX GASKET	13009640		●	●	●	●																
1020	AIR BOX INSULATION	13009641		●	●	●	●																
1041	ACTUATOR STE 4,5 Q3.51/6 L 3NM	65326804		●	●	●	●																
1051	AIR FLAP CPL.	65326227		●	●	●	●																
1071	SERVOMOTOR HOLDER	65326226		●	●	●	●																
1080	CASING GASKET	13010055		●	●	●	●																
1090	GROMMET/HOUSING	13016845		●	●	●	●																
1100	HOOD VECTRON5 AND V6+MOUNTING SCREW	65301016		●	●	●	●																
1101	FLAT HEAD SCREW M5X15	65300519		●	●	●	●																
1102	GASKET STRIP/COVER	13009772		●	●	●	●																
1140	INSPECTION GLASS	13010008		●	●	●	●																
1145	CABLE GROMMET	13009648		●	●	●	●																
1170	AIR RECTIFIER 148/162 2BL.	65326666		●	●	●	●																
1180	PRESSURE TAP	13009738		●	●	●	●																
1190	FAN WHEEL D240X114 d24	13009736		●			●																
	FAN WHEEL D240X82 d19	13009649			●																		
	FAN WHEEL D250X114 d24	13009737				●																	
1200	AIR PRESSURE SWITCH BASE D32	13020723		●	●	●	●																
1210	AIR PRESSURE SWITCH 604 1-10MBAR	65300991		●	●	●	●																
1220	MOTOR 1.5KW 230/400V D19 + PLUG	13009654			●																		
	MOTOR 2.2KW230/400V D24+PLUG	13009739		●																			
	MOTOR 2.5KW230/400V D24+PLUG	13009740				●	●																
1230	D4/6 TUBE	13014337		●	●	●	●																
1500	ELECTRIC PART																						
1510	IGNITION TRANSFORMER EBI 2X7.5 230V	13009663		●	●	●	●																
1520	FUSE HOLDER + FUSE 6.3A	13016457		●	●	●	●																
1525	FUSE 5X20 6.3A	13016028		●	●	●	●																
1530	OPERATING SWITCH ON/OFF	13010007		●	●	●	●																
1540	OPERATING SWITCH - OPERATION	13014009		●	●	●	●																
1550	DISPLAY FOR CONTROL UNIT TCG-TCH REL.2.2	65301109		●	●	●	●																
1560	PLASTIC CONTROL BOARD	65300992		●	●	●	●																
1570	CABLE GROMMET D54/D47/D36	65300993		●	●	●	●																
1580	SHUTTER/CONSOLE	13009661		●	●	●	●																
1600	CABLE + CONNECT. / GAS PRESSURE SWITCH	65301019		●	●	●	●																
1604	GAS PRESSURE SWITCH CABLE+CONNECTOR	65301034	TC	●	●	●	●																
1610	CABLE + CONNECT. / GAS VALVE	65301020		●	●	●	●																
1620	CABLE / IGNITER	65300997		●	●	●	●																
1660	CABLE L560+PLUG 4P/MOTOR	65301000		●	●	●	●																
1670	IGNITION CABLE	13009743		●	●	●	●																
1700	CONTROL UNIT TCG 511.01TC	65300881		●	●	●	●																
1800	CONTACTOR	13009778		●	●	●	●																
1810	THERMAL RELAY LR2K 5.5-8.0A	13009746		●	●	●	●																

2000

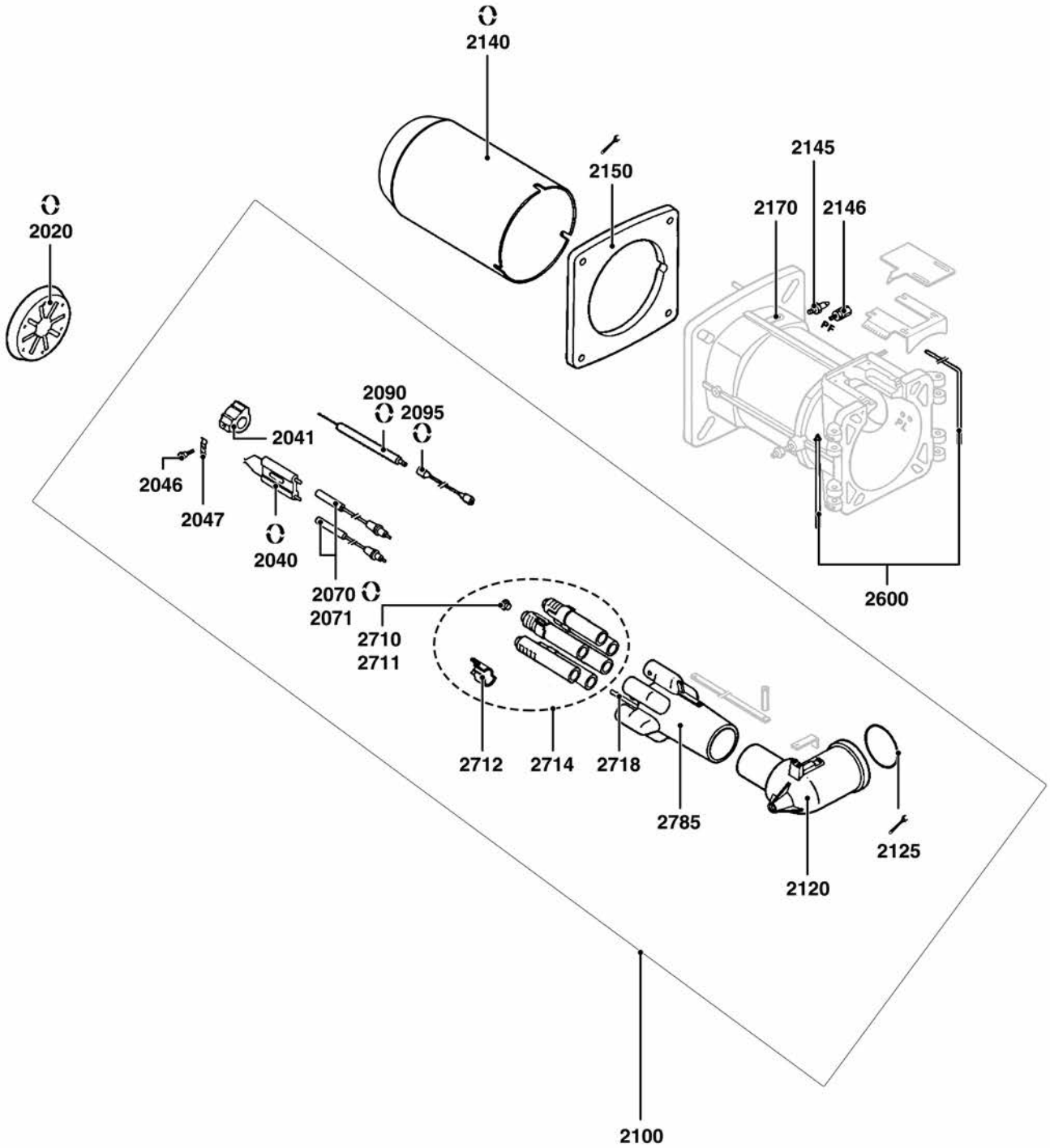
2140
2150
2145
2170
2146
2020
2090
2095
2041
2046
2047
2040
2070
2071
2710
2711
2600
2712
2714
2718
2785
2125
2120
2100

	Description	Manf. Pt. N	Type	1 BB-VG6.1600 DP R /TC	2 BB-VG6.1600 DP R /TC 60HZ	3 BB-VG6.2100 DP R /TC	4 BB-VG6.2100 DP R /TC 60HZ	5 CH-G0732 – T1/KN	6 CH-G0732 – T2/KL	7 CH-G0732 – T3/KM	8 CH-G0733 – T1/KN	9 CH-G0733 – T2/KL	10 CH-G0733 – T3/KM	11 GT - d334 - 1"1/4-Rp2" /TC	12 GT - d335 - 1"1/2-Rp2" /TC	13 GT -s317 - 2"-Rp2" /TC	14 GT -s316 - 65-DN65 /TC	15 GT -s315 - 80-DN80 /TC	16	17	18	From	to
2000	COMBUSTION HEAD																						
2020	BAFFLE PLATE D145/50X13,5 8SL. 6DRIL	65326673									●	●	●										
	BAFFLE PLATE D168/50 8SL 7DRIL.	13009711						●	●	●													
2040	ELECTROD.BLOC.27X55 d6,4 D2X23 45°+SCREW	13009726						●	●	●	●	●	●										
2041	ELECTRODE SUPPORT	13010050						●	●	●	●	●	●										
2046	WASHER HEAD SCREW M4/ELECTRODES BLOCK	13010049						●	●	●	●	●	●										
2047	FLANGE 20X11X2,6 FIX. ELECTRODE	13009725						●	●	●	●	●	●										
2070	IGNITION CABLES L950	13009727						●	●	●	●	●	●										
2071	ROUND CONNECTOR CABLE ALU.ION X2	13010056						●	●	●	●	●	●										
2090	IONISATION PROBE D8X120 d6,4 D4X36	13009626						●	●	●	●	●	●										
2095	IONISATION CABLE SIL.F.MC4-D6,35X950	13009728						●	●	●	●	●	●										
2100	GAS LINE ASS. VG6R/NC160/210G KL/T2	13010052							●			●											
	GAS LINE ASS. VG6R/NC160/210G KM/T3	13010053								●			●										
	GAS LINE ASS. VG6R/NC160/210G KN/T1	13010051						●			●												
2120	GAS ELBOW + TUBE T1/KN	13009732						●			●												
	GAS ELBOW + TUBE T2/KL	13009733							●			●											
	GAS ELBOW + TUBE T3/KM	13009734								●			●										
2125	O-RING D.75X4	13009731						●	●	●	●	●	●										
2140	FLAME TUBE D227/145/205 L343	65326670									●												
	FLAME TUBE D227/145/205 L443	65326672											●										
	FLAME TUBE D227/145/205 L543	65326671										●											
	FLAME TUBE D227/172/190 L343	13009760						●															
	FLAME TUBE D227/172/190 L443	13009762								●													
	FLAME TUBE D227/172/190 L543	13009761							●														
2145	PRESSURE TAP R1/8	13009722						●	●	●	●	●	●										
2146	STRAIGHT UNION	13009721						●	●	●	●	●	●										
2150	GASKET/BOILER FRONT 326X335X3	13009719						●	●	●	●	●	●										
2170	BURNER TUBE SCREW FIX. KIT (X3)	13009723						●	●	●	●	●	●										
2600	HINGE KIT	13009724						●	●	●	●	●	●										
2710	NATURAL GAS ACCESS. KIT	13010048	G20-G25					●	●	●	●	●	●										
2711	PROPANE ACCESS. KIT	13007041	G31					●	●	●	●	●	●										
2712	SHUTTER/NOZZLE	13010046						●	●	●	●	●	●										
2714	SET OF GAS NOZZLES	13010047						●	●	●	●	●	●										
2718	IGNITION NOZZLE	13014075						●	●	●	●	●	●										
2785	STAR GAS HEAD	13009730						●	●	●	●	●	●										

3000

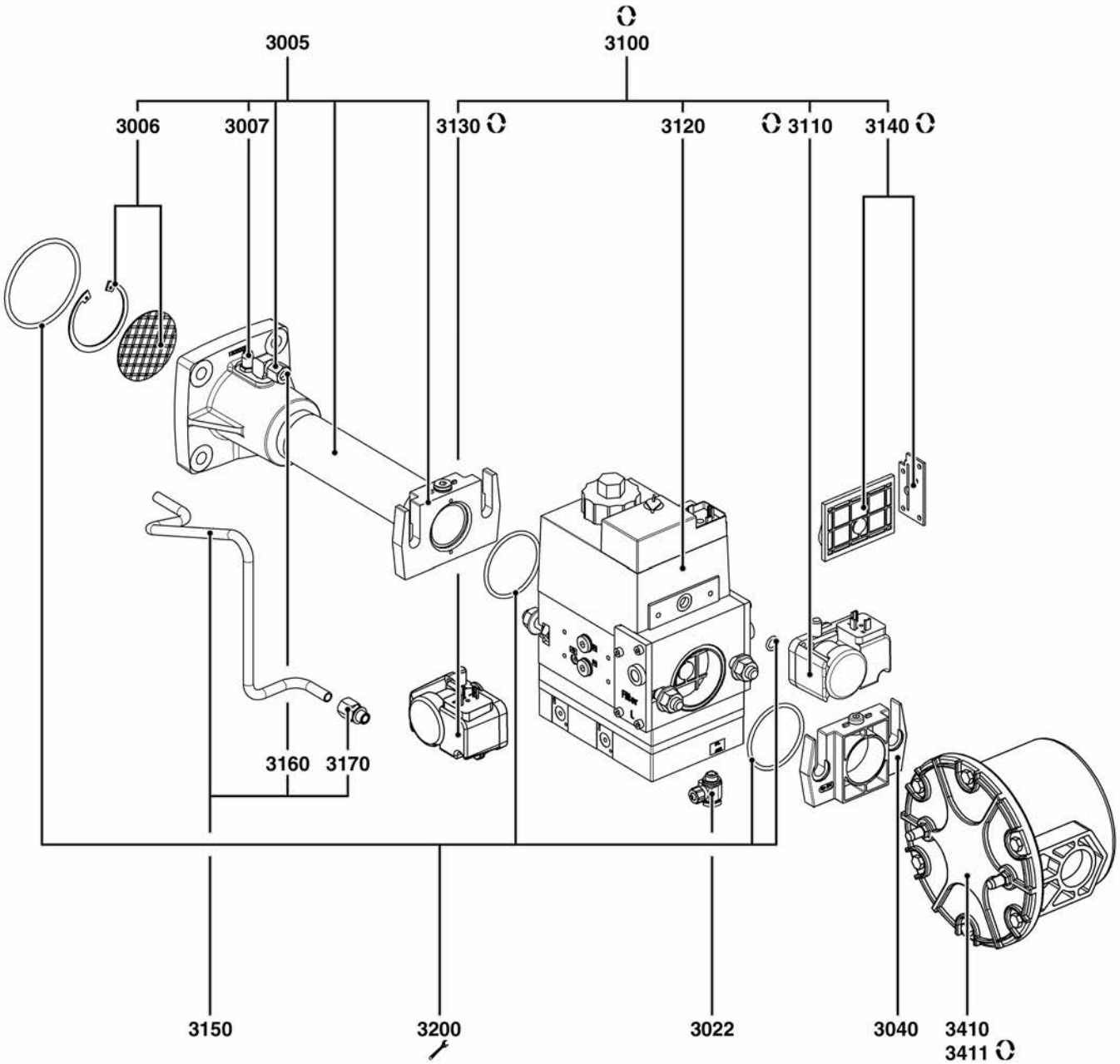

R8220036

	Description	Manf. Pt. N	Type	BB-VG6.1600 DP R / TC	BB-VG6.1600 DP R / TC 60HZ	BB-VG6.2100 DP R / TC	BB-VG6.2100 DP R / TC 60HZ	CH-G0732 – T1/KN	CH-G0732 – T2/KL	CH-G0732 – T3/KM	CH-G0733 – T1/KN	CH-G0733 – T2/KL	CH-G0733 – T3/KM	GT - d334 - 1"1/4-Rp2" /TC	GT - d335 - 1"1/2-Rp2" /TC	GT -s317 - 2"-Rp2" /TC	GT -s316 - 65-DN65 /TC	GT -s315 - 80-DN80 /TC									31	
				1	2	3	4	5	6	7	8	9	10	11	12	13	14	15	16	17	18					From		to
3000	GAS TRAIN																											
3005	COLLECTOR MOUNT RP 1¨1/4	13014122												●														
	COLLECTOR MOUNT RP 2	13014128													●													
3006	STABILISER + CIRCLIP D.60	13011367												●	●													
3007	PRESSURE TAP R1/8	13009722												●	●													
3022	BANJO UNION LCK-G1/8-PK4	13020682												●	●													
3040	FLANGE MB410/412 RP1 1/4	13010085												●														
	FLANGE MB420 RP2 W.PRES.PLUG	13007859													●													
3100	GAS VALVE MBVEF412 B01 S32 RP1"1/4	65301036												●														
	GAS VALVE MBVEF420 B01 S32 RP2"	65301037													●													
3110	GAS PRESS. SWITCH GW 150 A5 30-150MB DIN	13010078												●	●													
3120	COIL DUN MBVEF412S12	65300707												●														
	COIL DUN MBVEF420S12	65300708													●													
3130	GAS PRESS.SWITCH GW 50 A5 2,5-50MB	65323019												●	●													
3140	FILTERING ELEMENT /MB...410/412	13016012												●														
	FILTERING ELEMENT /MB...420	13007901													●													
3150	GAS PRESSURE TUBE MBVEF412+UNION	65300649												●														
	GAS PRESSURE TUBE MBVEF420+UNION	65300669													●													
3160	ANGLED UNION	13023188												●	●													
3170	UNION G1/8 + GASKET	13023187												●	●													
3200	GASKET SET MB...412	65300576												●														
	GASKET SET MB...420	65300671													●													
3410	EXTERNAL GAS FILTER RP2	13009700												●	●													
3411	FILT. ELEMENT RP2 + GASKET	13010044												●	●													

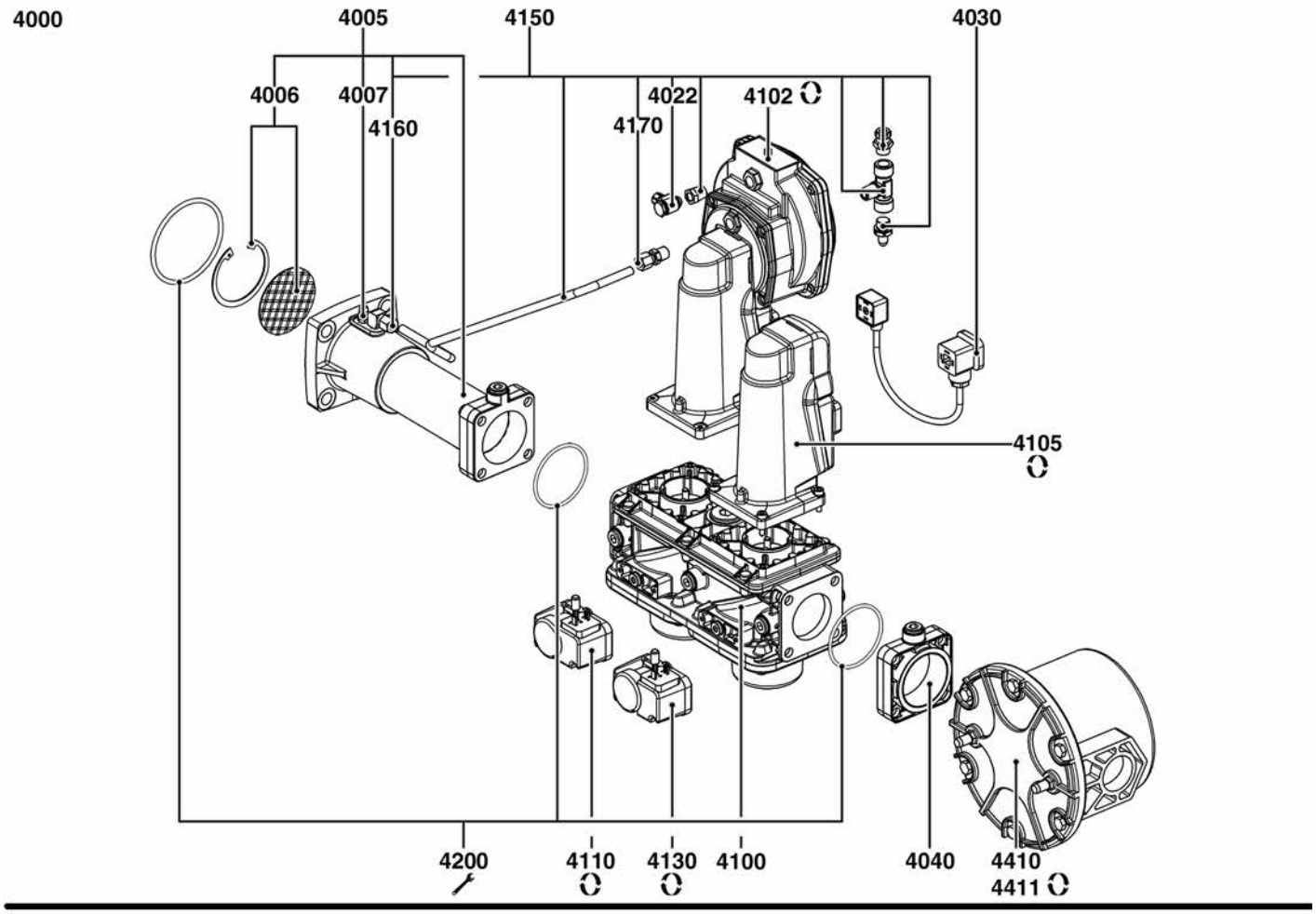
4000
4005
4150
4030
4006
4007
4160
4022
4102
4170
4105
4200
4110
4130
4100
4040
4410
4411

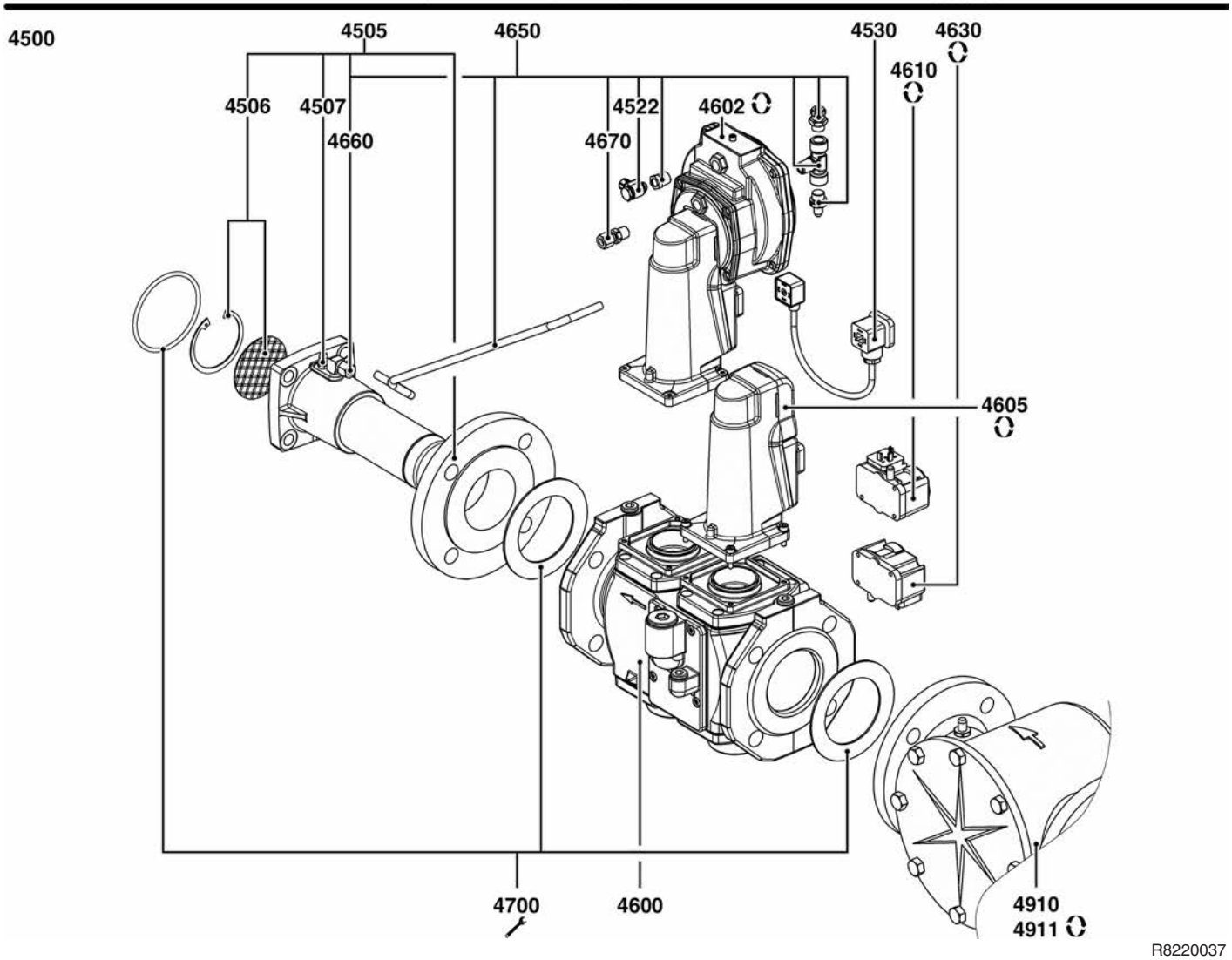
4500
4505
4650
4530
4630
4610
4506
4507
4660
4522
4602
4670
4605
4700
4600
4910
4911

R8220037

	Description	Manf. Pt. N	Type	BB-VG6.1600 DP R / TC	BB-VG6.1600 DP R / TC 60HZ	BB-VG6.2100 DP R / TC	BB-VG6.2100 DP R / TC 60HZ	CH-G0732 – T1/KN	CH-G0732 – T2/KL	CH-G0732 – T3/KM	CH-G0733 – T1/KN	CH-G0733 – T2/KL	CH-G0733 – T3/KM	GT - d334 - 1"1/4-Rp2" /TC	GT - d335 - 1"1/2-Rp2" /TC	GT -s317 - 2"-Rp2" /TC	GT -s316 - 65-DN65 /TC	GT -s315 - 80-DN80 /TC						31	
				1	2	3	4	5	6	7	8	9	10	11	12	13	14	15	16	17	18	From		to
4000	GAS TRAIN																								
4005	COMPLETE GAS SUPPLY TUBE RP2	65301024														●									
4006	STABILISER + CIRCLIP D.60	13011367														●									
4007	PRESSURE TAP R1/8	13009722														●									
4022	BANJO UNION LCK-G1/8-PK4	13020682														●									
4030	CONNECTING CABLE SKP	13020958														●									
4040	FLANGE AGA51 RP2	65300871														●									
4100	GAS VALVE VGD20 5011 RP2"	65311581														●									
4102	GAS SERVOM. SKP75.003E2 W/O LIMIT SW.	13020950														●									
4105	GAS SERVOM. SKP15.000E2 W/O LIMIT SW.	13020951														●									
4110	GAS PRESS. SWITCH GW 150 A5 30-150MB DIN	13010078														●									
4130	GAS PRESS.SWITCH GW 50 A5 2,5-50MB	65323019														●									
4150	GAS PR. TUBE VGD20 RP2 NC95/210-VG5/6	65301075														●									
4160	ANGLED UNION	13023188														●									
4170	STRAIGHT UNION	13009721														●									
4200	GASKET KIT VGG,VGF10/VGD20 RP2	13011733														●									
4410	EXTERNAL GAS FILTER RP2	13009700														●									
4411	FILT. ELEMENT RP2 + GASKET	13010044														●									
4500	GAS TRAIN																								
4505	COMPLETE GAS SUPPLY TUBE DN65	65301022															●								
	COMPLETE GAS SUPPLY TUBE DN80	65301023																●							
4506	STABILISER + CIRCLIP D.60	13011367															●	●							
4507	PRESSURE TAP R1/8	13009722															●	●							
4522	BANJO UNION LCK-G1/8-PK4	13020682															●	●							
4530	CONNECTING CABLE SKP	13020958															●	●							
4600	GAS VALVE VGD40 065 DN65	65323661															●								
	GAS VALVE VGD40 080 DN80	65311583																●							
4602	GAS SERVOM. SKP75.003E2 W/O LIMIT SW.	13020950															●	●							
4605	GAS SERVOM. SKP15.000E2 W/O LIMIT SW.	13020951															●	●							
4610	GAS PRESS. SWITCH GW 150 A5 30-150MB DIN	13010078															●	●							
4630	GAS PRESS.SWITCH GW 50 A5 2,5-50MB	65323019															●	●							
4650	GAS PR.TUB.EQ. VGD40 DN65 NC95/210-VG5/6	65301025															●								
	GAS PR.TUBE EQ.VGD40 DN80 NC210-VG6	65301026																●							
4660	ANGLED UNION	13023188															●	●							
4670	STRAIGHT UNION	13009721															●	●							
4700	GASKET KIT VGD40 DN65	13013781															●								
	GASKET KIT VGD40 DN80	13013782																●							
4910	EXTERNAL GAS FILTER DN65	13009703															●								
	GAS FILTER DN80	13013787																●							
4911	GAS FILTERING ELEMENT DN65 WITH GASKET	13009704															●								
	GAS FILTERING ELEMENT DN80 WITH GASKET	13013788																●							

	6XXXXXXX	DE NL	FR ES	IT	X
1005	13009640	DICHTBAND LUFTK.BG DICHTING LUCHTKAST	JOINT BOITE A AIR JUNTA CAJA DE AIRE	GUARNIZIONE SCATOLA DELL'ARIA	1
1020	13009641	ISOLIERUNG-LUFTKASTEN ISOLATIE LUCHTKAST	ISOLATION BOITE A AIR AISLAMIENTO CAJA DE AIRE	ISOLAMENTO SCATOLA DELL'ARIA	1
1041	65326804	STELLANTRIEB STE 4,5 Q3.51/6 L 3NM REGELMOTOR STE 4,5 Q3.51/6 L 3NM	SERVOMOTEUR STE 4,5 Q3.51/6 L 3NM SERVOMOTOR STE 4,5 Q3.51/6 L 3NM	SERVOMOTORE STE 4,5 Q3.51/6 L 3NM	1
1051	65326227	KOMPL. LUFTKLAPPE COMPLETE LUCHTKLEP	VOLET D'AIR EQUIPE VÁLVULA DE AIRE EQUIPADA	SERRANDA DELL'ARIA EQUIPAGGIATA	1
1071	65326226	STELLANTRIEBHALTER STEUN REGELMOTOR	SUPPORT SERVOMOTEUR SOPORTE SERVOMOTOR	SUPPORTO SERVOMOTORE	1
1080	13010055	DICHTUNG GEHAEUSE DICHTING CARTER	JOINT CARTER JUNTA CÁRTER	GUARNIZIONE CARTER	1
1090	13016845	KABELDURCHFÜHRUNG / GEHÄUSE DRAADDOORVOER/BRANDERHUIS	PASSE FIL/CARTER PASACABLES/CÁRTER	PASSAFILO/ CARTER	1
1100	65301016	BRENNERHAUBE VECTRON5 U. V6 KPL. COMPLETE KAP VECTRON5 EN V6	CAPOT VECTRON5 ET V6+VIS CUBIERTA VECTRON5 Y V6 EQUIPADA	COFANO V5 E V6 EQUIPAGGIATO	1
1101	65300519	FLACHKOPF-SCHRAUBE M5X15+SPITZE PLATKOPSCHROEF M5X15	VIS A TETE PLATE M5X15 TORNILLO DE CABEZA PLANA M5X15	VITE A TESTA PIANA M5X15	1
1102	13009772	DICHTBAND/HAUBE DICHTINGSSTRIP / BRANDERKAP	BANDE D'ETANCHEITE / CAPOT BANDA ESTANQUEIDAD / CUBIERTA	NASTRO SIGILLANTE/ COPERTURA	1
1140	13010008	SCHAUGLAS KPL. KIJKGLAS VG6M /KL451/EK06/EK6/7/8/9	VERRE DE REGARD VISOR	VISORE DI CALDAIA	1
1145	13009648	TUELLE-KABELDURCHFUEHRUNG-VERPACKT DRAADGELEIDER	PASSE FIL PASACABLES	PASSA FILO	1
1170	65326666	LUFTLEITSCHAUFEL 148/162 2SCH. LUCHTRECYCLAGE 148/162 2BL.	REDRESSEUR D'AIR 148/162 2AIL. RECTIFICADOR DE AIRE 148/162 2AL.	RADDRIZZATORE D'ARIA 148/162 2PAL.	1
1180	13009738	DIFFERENTIALDRUCKNIPPEL DRUKAANSLUITING	PRISE DE PRESSION TOMA DE PRESIÓN	PRESA DI PRESSIONE	1
1190	13009649	VENTILATORRAD D240X82 d19 VENTILATORRAD D240X82 d19	TURBINE D240X82 d19 TURBINA D240X82 d19	VENTOLA D240X82 d19	1
	13009736	VENTILATORRAD D240X114 D24 VENTILATOR D240X114 d24	TURBINE D240X114 d24 TURBINA D240X114 d24	TURBINA D240X114 d24	1
	13009737	VENTILATORRAD D250X114 D24 VENTILATOR D250X114 d24	TURBINE D250X114 d24 TURBINA D250X114 d24	TURBINA D250X114 d24	1
1200	13020723	HALTER D32 LUFTDRUCKWAECHTER HUBA STEUN MANOSTAAT HUBA D32	SUPPORT MANOSTAT AIR D32 SOPORTE DEL MANOSTATO DE AIRE D32	SUPPORTO PRESSOSTATO DELL'ARIA D32	1
1210	65300991	LUFTDRUCKWAECHTER HUBA 604 1-10MBAR LUCHTDRUKBEWAKER HUBA 604 1-10MBAR	MANOSTAT HUBA 604 1-10MBAR PRESSOSTATO AIRE HUBA 604 1-10MBAR	MANOSTATO HUBA 604 1-10MBAR	1
1220	13009654	MOTOR 1,5KW 230/400V D19+STECKER MOTOR 1,5KW 230/400V D19 + STEKKER	MOTEUR 1,5KW 230/400V D19+PRISE MOTOR 1,5KW 230/400V D19+TOMA	MOTORE 1,5KW 230/400V D19+PRESA	1
	13009739	MOTOR 2,2KW230/400V D24+STECKER MOTOR 2,2KW230/400V D24+STEKKER	MOTEUR 2,2KW230/400V D24+PRISE MOTOR 2,2KW230/400V D24+TOMA	MOTORE 2,2KW230/400V D24+PRESA	1
	13009740	MOTOR 2,5KW230/400V D24+STECKER MOTOR 2,5KW230/400V D24+STEKKER	MOTEUR 2,5KW230/400V D24+PRISE MOTOR 2,5KW230/400V D24+TOMA	MOTORE 2,5KW230/400V D24+PRESA	1
1230	13014337	PVC-SCHLAUCH D4/6 BUIS D4/6	TUYAU D4/6 TUBO D4/6	TUBO D4/6	1
1510	13009663	ZUENDTRAFO EBI 2X7,5 230V ONTSTEKINGSTRAFO EBI 2X7,5 230V	ALLUMEUR EBI 2X7,5 230V ENCENDEDOR EBI 2X7,5 230V	TRASFORMATORE ACCENSIONE EBI 2X7,5 230V	1
1520	13016457	SICHERUNGSHALTER+ SICHERUNG 6,3A ZEKERINGHOUDER+ZEKERING 6,3A	PORTE FUSIBLE+FUSIBLE 6.3A PORTA FUSIBLE+FUSIBLE 6.3A	PORTAFUSIBILE + FUSIBILE 6.3A	1
1525	13016028	SICHERUNG 6,3A TRAEGE D5X20 ZEKERING 5X20 6.3A	FUSIBLE 5X20 6.3A (CALIBRE) FUSIBLE 5X20 6.3A	FUSIBILE 5X20 6.3A	1
1530	13010007	SCHALTER EIN-AUS/VERPACKT SCHAKELAAR ON/OFF	INTERRUPTEUR MARCHE/ARRET INTERRUPTOR	INTERRUTTORE ON/OFF	1
1540	13014009	BETRIEBSSCHALTER SCHAKELAAR - BEDRIFJ	INTERRUPTEUR - FONCTIONNEMENT INTERRUPTOR	INTERRUTTORE - FUNZIONAMENTO	1
1550	65301109	ANZEIGE FUR AUTOMAT. TCG-TCH REL.2.2 DISPLAY V. BRANDERAUTOM.TCG-TCH REL.2.2	AFFICHEUR POUR COFFRET TCG-TCH REL. 2.2 PANTALLA P. PROGRAMAD. TCG-TCH REL.2.2	DISPLAY PER APPARECCHIA.TCG-TCH REL.2.2	1
1560	65300992	BEDIENFELD KUNSTSTOFF PLASTIC BEDIENINGSPANEEL	PUPITRE DE COMMANDE PLASTIQUE PUPITRE DE MANDO PLÁSTICO	QUADRO DI COMANDO PLASTICO	1
1570	65300993	KABELTUELLE DRAADDOORVOER D54/D47/D36	PASSE FIL D54/D47/D36 PASACABLE D54/D47/D36	PASSA FILO D54/D47/D36	1
1580	13009661	ABDECKUNG/SCHNITTSTELLE AFSLUITER / BEDIENINGSPANEEL	OBTURATEUR / PUPITRE OBTURADOR / TABLERO	OTTURATORE / QUADRO	1
1600	65301019	KABEL+STECKER F.GASDRUCKW.MIN. KABEL + STEKKER GASDRUKBEWAKER	CABLE + CONNECT. / MANOSTAT GAZ CABLE + TOMA / PRESSOSTATO GAS	CAVO + CONNETT. / MANOSTATO GAS	1
1604	65301034	DRUCKWAECHTERKABEL KABEL + STEKKER / GASDRUKBEWAKER	CABLE EQUIPE MANOSTAT GAZ CABLE + TOMA/MANOSTATO DE GAS	CAVO + PRESA / MANOSTATO GAS	1
1610	65301020	KABEL+STECKER F.GASVENTIL AGP KABEL + STEKKER GASKLEP	CABLE + CONNECT. / VANNE GAZ CABLE+ TOMA/VALVULA GAS	CAVO + CONNETT. / VALVOLA GAS	1

		DE NL	FR ES	IT	X
1620	65300997	KABEL+STECKER / ZUENDTRAFO KABEL + STEKKER / ONTSTEKER	CABLE ALLUMEUR CABLE+TOMA/ENCENDEDOR	CAVO TRASFORMATORE ACCENS.	1
1660	65301000	KABEL L560+STECKER 4P/MOTOR KABEL L560+STEKKER 4P/MOTOR	CABLE L560+PRISE 4P/MOTEUR CABLE L560+TOMA 4P/MOTOR	CAVO LUNGH. 560MM + PRESA 4 POLI/MOTORE	1
1670	13009743	ZUENDKABEL GEBLAESETEIL SET 2 ST. ONTSTEKINGSKABEL	CABLE ALLUMAGE CABLE ENCENDIDO	CAVO ACCENSIONE	1
1700	65300881	FEUERUNGSAUTOMAT TCG 511.01TC BRANDERAUTOMAAT TCG 511.01TC	COFFRET TCG 511.01TC PROGRAMADOR TCG 511.01TC	APPARECCHIATURA TCG 511.01TC	1
1800	13009778	SCHUETZ LC1 K09 10M7 SCHNEIDER SCHAKELAAR	CONTACTEUR CONTACTOR	CONTATTORE	1
1810	13009746	MOTORSCHUETZRELAIS LR2-K0314 5.5-8.0A THERMISCH RELAIS LR2K 5,5-8,0A	RELAIS THERMIQUE LR2K 5.5-8.0A RELÉ TÉRMICO LR2K 5.5-8.0A	RELÈ TERMICO LR2K 5.5-8.0A	1
2020	13009711	STAUSCHEIBE D168/50 8SL 7DRIL. STUWPLAAT D168/50 8SL 7DRIL.	DEFLECTEUR D168/50 8SL 7DRIL. DEFLECTOR D168/50 8SL 7DRIL.	DIFFUSORE D168/50 8SL 7DRIL.	1
	65326673	STAUSCHEIBE D145/50X13,5 8SL. 6DRIL STUWPLAAT D145/50X13,5 8SL. 6DRIL	DEFLECTEUR D145/50X13,5 8SL. 6DRIL DEFLECTOR D145/50X13,5 8SL. 6DRIL	DIFFUSORE D145/50X13,5 8SL. 6DRIL	1
2040	13009726	ZUENDELEKTROD.27X55 d6,4D2X23 45° +SCHR. ELEKTRODENBLOK 27X55 d6,4D2X23 45°+SCHR.	BLOC-ELECTRODES 27X55 d6,4D2X23 45° +VIS BLOQ.ELECTRO.27X55 d6,4D2X23 45°+TORNIL.	BLOC.ELETTRODI 27X55 d6,4D2X23 45° +VITE	1
2041	13010050	HALTER ZUENDELEKTRODE/IONISATIONSSTAB ELEKTRODEHOUDER	SUPPORT/SONDE IONISATION SOPORTE ELECTRODO	SUPPORTO ELETTRODO	1
2046	13010049	SCHRAUBE M4-SPEZIAL KRAAGSCHROEF M4/ELEKTRODEBLOK	VIS EPAULEE M4/BLOC-ELECTRODES TORN.ALLEN M4/BLOQUE-ELECTRODOS	VITE CON SPALLAMENTO M4/BLOCCO ELETTRODI	1
2047	13009725	FLANSCH 20X11X2,6 FIX. ZUENDELEKTRODE FLENS 20X11X2,6 FIX. ONTSTEKINGSPEN	BRIDE 20X11X2,6 FIX. ELECTRODE BRIDA 20X11X2,6 FIX. ELECTRODO	FLANGIA 20X11X2,6 FIX. ELETTRODO	1
2070	13009727	ZUENDKABEL L 950 ONTSTEKINGSKABELS L950	CABLES ALLUMAGE L950 CABLES ENCENDIDO L950	CAVI ACCENSIONE L950	1
2071	13010056	RUNDER STECKER ZÜNDKABEL ION X2 RONDE STEKKER KABEL ALU.ION X2	FICHE RONDE D6.4 CLAVIJA REDONDA CABLE ALU.ION X2	SPINA ROTONDA CAVO ACCENS.ION X2	1
2090	13009626	IONISATIONSSONDE D8X120 d6,4 D4X36 IONISATIEPEN D8X120 d6,4 D4X36	SONDE IONISATION D8X120 d6,4 D4X36 SONDA IONIZACION D8X120 d6,4 D4X36	SONDA RIVELAZIONE D8X120 d6,4 D4X36	1
2095	13009728	IONISATIONSKABEL L 950 IONISATIEKABEL SIL.F.MC4-D6,35X950	CABLE IONISATION SIL.F.MC4-D6,35X950 CABLE IONIZACION SIL.F.MC4-D6,35X950	CAVO RIVELAZIONE SIL.F.MC4-D6,35X950	1
2100	13010051	STERNGASKOPF KPL. VG6R/NC160/210G KN/T1 GASLIJN CPL. VG6R/NC160/210G KN/T1	LIGNE GAZ EQ. VG6R/NC160/210G KN/T1 LINEA DE GAS EQ. VG6R/NC160/210G KN/T1	LINEA GAS CPL. VG6R/NC160/210G KN/T1	1
	13010052	STERNGASKOPF KPL. VG6R/NC160/210G KL/T2 GASLIJN CPL. VG6R/NC160/210G KL/T2	LIGNE GAZ EQ. VG6R/NC160/210G KL/T2 LINEA DE GAS EQ. VG6R/NC160/210G KL/T2	LINEA GAS CPL. VG6R/NC160/210G KL/T2	1
	13010053	STERNGASKOPF KPL. VG6R/NC160/210G KM/T3 GASLIJN CPL. VG6R/NC160/210G KM/T3	LIGNE GAZ EQ. VG6R/NC160/210G KM/T3 LINEA DE GAS EQ. VG6R/NC160/210G KM/T3	LINEA GAS CPL. VG6R/NC160/210G KM/T3	1
2120	13009732	GASBOGEN + ROHR T1/KN ELLEBOOG GAS + PIJP T1/KN	COUDE GAZ + TUBE T1/KN CODO GAS+TUBO T1/KN	GOMITO GAS + TUBO T1/KN	1
	13009733	GASBOGEN + ROHR T2/KL ELLEBOOG GAS + PIJP T2/KL	COUDE GAZ + TUBE T2/KL CODO GAS+TUBO T2/KL	GOMITO GAS + TUBO T2/KL	1
	13009734	GASBOGEN + ROHR T3/KM ELLEBOOG GAS + PIJP T3/KM	COUDE GAZ + TUBE T3/KM CODO GAS T3/KM	GOMITO GAS + TUBO T3/KM	1
2125	13009731	O-RING D.75X4 O-RING D.75X4	O'RING D.75X4 JUNTA TÓRICA D.75X4	O'RING D.75X4	1
2140	13009760	BRENNERROHR D227/172/190 L343 BRANDERBUIS D227/172/190 L343	TUBE DE FLAMME D227/172/190 L343 TUBO DE LLAMA D227/172/190 L343	BOCCAGLIO D227/172/190 L343	1
	13009761	BRENNERROHR D227/172/190 L543 BRANDERBUIS D227/172/190 L543	TUBE DE FLAMME D227/172/190 L543 TUBO DE LLAMA D227/172/190 L543	BOCCAGLIO D227/172/190 L543	1
	13009762	BRENNERROHR D227/172/190 L443 BRANDERBUIS D227/172/190 L443	TUBE DE FLAMME D227/172/190 L443 TUBO DE LLAMA D227/172/190 L443	BOCCAGLIO D227/172/190 L443	1
	65326670	BRENNERROHR D227/145/205 L343 VLAMBUIS D227/145/205 L343	TUBE DE FLAMME D227/145/205 L343 TUBO DE LLAMA D227/145/205 L343	TUBO FIAMMA D227/145/205 L343	1
	65326671	BRENNERROHR D227/145/205 L543 VLAMBUIS D227/145/205 L543	TUBE DE FLAMME D227/145/205 L543 TUBO DE LLAMA D227/145/205 L543	TUBO FIAMMA D227/145/205 L543	1
	65326672	BRENNERROHR D227/145/205 L443 VLAMBUIS D227/145/205 L443	TUBE DE FLAMME D227/145/205 L443 TUBO DE LLAMA D227/145/205 L443	TUBO FIAMMA D227/145/205 L443	1
2145	13009722	MESSNIPPEL GERADE R1/8Z-VERPACKT DRUKAANSLUITING R1/8	PRISE PRESSION R1/8 TOMA PRESIÓN R1/8	PRESA PRESSIONE R1/8	1
2146	13009721	VERSCHRAUBUNG PF + PL VERBINDING RECHT	RACCORD DROIT EMPALME RECTO	RACCORDO DESTRO	1
2150	13009719	DICHTUNG/KESSELTÜR 326X335X3 DICHTING KLINGERIT 326X335X3	JOINT/FAÇADE CHAUDIERE 326X335X3 JUNTA/FRENTE CALDERA 326X335X3	GUARN./LATO FRONTALE CALDAIA 326X335X3	1
2170	13009723	SCHRAUBEN-SET BRENNEROHR M8X20/VERPACKT KIT BEV.SCHROEF BRANDERBUIS (X3)	KIT VIS FIX. TUBE BRULEUR (X3) KIT TORN.FIJ. TUBO QUEMADOR (X3)	KIT VITI FISS. TUBO BRUCIATORE (X3)	1
2600	13009724	FUEHR.BOLZEN-SET KIT ASSEN	KIT AXES KIT EJES	KIT ASSI	1
2710	13010048	SCHRAUBENSET E-GAS ACCESSOIREKIT AARDGAS	ACCESS. KIT GAZ NATUREL ACCES. KIT GAS NATURAL	ACCESS. KIT GAS NATURALE	1
2711	13007041	SCHRAUBEN-SET F-GAS ACCESSOIREKIT PROPAAN	ACCESS. KIT PROPANE ACCES. KIT PROPANO	ACCESS. KIT PROPANO	1

	6XXXXXXX	DE NL	FR ES	IT	X
2712	13010046	SCHIEBEHUELSEN-SET BRENNSTOFFKOPF AFSLUITER/VERDELER	OBTURATEUR/DIFFUSEUR GAZ OBTURADOR/DIFUSOR	OTTURATORE/DIFFUSORE	1
2714	13010047	GASDUESEN BG SET OF GAS NOZZLES	DIFFUSEURS GAZ CPL. DIFUSORES GAS CPL.	INIETTORI GAS CPL.	1
2718	13014075	GASDUESE D6/4 VERDELER ONTSTEKING	DIFFUSEUR ALLUMAGE DIFUSOR ENCENDIDO	DIFFUSORE ACCENSIONE	1
2785	13009730	GASKOPFAUFSATZ STERGASKOP	ETOILE REPART.GAZ ESTRELLA GAS	RIPARTITORE GAS	1
3005	13014122	MONTIERTER KOLLEKTOR RP 1¨1/4 COLLECTOR GEMONTEERD RP 1¨1/4	COLLECTEUR MONTE RP 1¨1/4 COLECTOR MONTADO RP 1¨1/4	COLLETTORE MONTATO RP 1¨1/4	1
	13014128	GASANSCHLUSS-ROHR R2Z KPL. COLLECTOR GEMONTEERD RP 2	COLLECTEUR MONTE RP 2 COLECTOR MONTADO RP 2	COLLETTORE MONTATO RP 2	1
3006	13011367	SICHERUNGSRING U.STABILISATOR D60 STABILISATOR+ BORGVEREN D.60	STABILISATEUR+ CIRCLIPS D.60 ESTABILIZADOR+ ANILLO DE RETÉN D.60	STABILIZZATORE+ANELLI ELASTICI D.60	1
3007	13009722	MESSNIPPEL GERADE R1/8Z-VERPACKT DRUKAANSLUITING R1/8	PRISE PRESSION R1/8 TOMA PRESIÓN R1/8	PRESA PRESSIONE R1/8	1
3022	13020682	SCHWENKVERSCHRAUBUNG LCK-G1/8-PK4 ¨BANJO¨ AANSLUITING LCK-G1/8-PK4	RACCORD BANJO LCK-G1/8-PK4 RACOR TIPO ¨BANJO¨ LCK-G1/8-PK4	RACCORDO "BANJO" LCK-G1/8-PK4	1
3040	13007859	FLANSCH MB420 RP2 W.PRES.PLUG FLENS MB420 RP2 W.PRES.PLUG	BRIDE MB420 RP2 W.PRES.PLUG BRIDA MB420 RP2 W.PRES.PLUG	FLANGIA MB420 RP2 W.PRES.PLUG	1
	13010085	FLANSCH MB410/412 RP1 1/4 FLENS MB410/412 RP1 1/4	BRIDE MB410/412 RP1 1/4 BRIDA MB410/412 RP1 1/4	FLANGIA MB410/412 RP1 1/4	1
3100	65301036	GASVENTIL MBVEF412 B01 S32 RP1 1/4 GASKLEP MBVEF412 B01 S32 RP1"1/4	VANNE GAZ MBVEF412 B01 S32 RP1"1/4 VALVULA GAS MBVEF412 B01 S32 RP1"1/4	VALVOLA GAS MBVEF412 B01 S32 RP1"1/4	1
	65301037	GASVENTIL MBVEF420 B01 S32 RP2 GASKLEP MBVEF420 B01 S32 RP2"	VANNE GAZ MBVEF420 B01 S32 RP2" VALVULA GAS MBVEF420 B01 S32 RP2"	VALVOLA GAS MBVEF420 B01 S32 RP2"	1
3110	13010078	GASDRUCKWÄCHTER GW 150 A5 30-150MB DIN GASDRUKREGELAAR GW 150 A5 30-150MB DIN	MANOSTAT GAZ GW 150 A5 30-150MB DIN MANOSTATO GAS GW 150 A5 30-150MB DIN	PRESSOSTATO GAS GW 150 A5 30-150MB DIN	1
3120	65300707	SPULE DUN MBVEF412S12 SPOEL DUN MBVEF412S12	BOBINE DUN MBVEF412S12 BOBINA DUN MBVEF412S12	BOBINA DUN MBVEF412S12	1
	65300708	SPULE DUN MBVEF420S12 SPOEL DUN MBVEF420S12	BOBINE DUN MBVEF420S12 BOBINA DUN MBVEF420S12	BOBINA DUN MBVEF420S12	1
3130	65323019	GASDRUCKWACHTER GW 50 A5 2,5-50MB GASDRUKSCHAKELAAR GW 50 A5 2,5-50MB	MANOSTAT GAZ GW 50 A5 2,5-50MB PRESOSTATO GAS GW 50 A5 2,5-50MB	PRESSOSTATO GAS GW 50 A5 2,5-50MB	1
3140	13007901	FILTEREINSATZ/TASCHENF.MB... 420 FILTERELEMENT /MB...420	ELEMENT FILTRANT /MB...420 ELEMENTO FILTRANTE /MB...420	ELEMENTO FILTRANTE /MB...420	1
	13016012	FILTEREINSATZ MB410/412 96x65 DUNGS FILTERELEMENT /MB...410/412	ELEMENT FILTRANT /MB...410/412 ELEMENTO FILTRANTE /MB...410/412	ELEMENTO FILTRANTE /MB...410/412	1
3150	65300649	DRUCKABNAHMEROHR MBVEF412 GASDRUKBUIS MBVEF412+AANSLUITING	TUBE PRESSION GAZ MBVEF412+RACCORD TUBO DE PRESIÓN GAS MBVEF412+EMPALME	TUBO DELLA PRESSIONE GAS MBVEF412	1
	65300669	DRUCKABNAHMEROHR MBVEF420 GASDRUKBUIS MBVEF420+AANSLUITING	TUBE PRESSION GAZ MBVEF420+RACCORD TUBO DE PRESIÓN GAS MBVEF420+EMPALME	TUBO DELLA PRESSIONE GAS MBVEF420	1
3160	13023188	WINKELVERSCHRAUBUNG GEBOGEN AANSLUITING	RACCORD COUDE RACOR ACODADO	RACCORDO A GOMITO	1
3170	13023187	VERSCHRAUBUNG 1/8Z D8 MB 407/412/420 AANSLUITING G1/8 + AFDICHTING	RACCORD G1/8+JOINT RACOR G1/8 + JUNTA	RACCORDO G1/8 + GUARNIZIONE	1
3200	65300576	O-RING-SET MB 412 PAKKINGSET MB...412	KIT JOINTS MB...412 KIT DE JUNTAS MB...412	KIT GUARNIZIONI MB...412	1
	65300671	O-RING-SET MB420 DICHTINGSKIT MB...420	KIT JOINTS MB...420 KIT JUNTAS MB...420	KIT GUARNIZIONI...420	1
3410	13009700	EXTERNER GASFILTER RP2 FILTER GAS EXTERN RP2	FILTRE GAZ EXTERNE RP2 FILTRO GAS EXTERNO RP2	FILTRO GAS ESTERNO RP2	1
3411	13010044	GASFILTER-EINSATZ+O-RING F.ANELLO R2Z FILTERELEMENT RP2+DICHTING	ELEMENT FILT. RP2+JOINT ELEMENTO FILT. RP2+JUNTA	ELEMENTO FILT. RP2+GUARNIZIONE	1
4005	65301024	GASANSCHLUSSROHR-BG R2Z GASAANSLUITBUIS CPL. RP2	COLLECTEUR COMPLET RP2 COLECTOR GAS CPL RP2	COLLETTORE RP2	1
4006	13011367	SICHERUNGSRING U.STABILISATOR D60 STABILISATOR+ BORGVEREN D.60	STABILISATEUR+ CIRCLIPS D.60 ESTABILIZADOR+ ANILLO DE RETÉN D.60	STABILIZZATORE+ANELLI ELASTICI D.60	1
4007	13009722	MESSNIPPEL GERADE R1/8Z-VERPACKT DRUKAANSLUITING R1/8	PRISE PRESSION R1/8 TOMA PRESIÓN R1/8	PRESA PRESSIONE R1/8	1
4022	13020682	SCHWENKVERSCHRAUBUNG LCK-G1/8-PK4 ¨BANJO¨ AANSLUITING LCK-G1/8-PK4	RACCORD BANJO LCK-G1/8-PK4 RACOR TIPO ¨BANJO¨ LCK-G1/8-PK4	RACCORDO "BANJO" LCK-G1/8-PK4	1
4030	13020958	VERBINDUNGSKABEL SKP15/SKP75 VERBINDINGSKABEL SKP	CABLE DE LIAISON SKP CABLE DE CONEXIÓN SKP	CAVO DI COLLEGAMENTO SKP	1
4040	65300871	FLANSCH AGA51 RP2 FLENS AGA51 RP2	BRIDE AGA51 RP2 BRIDA AGA51 RP2	FLANGIA AGA51 RP2	1
4100	65311581	GAS-MV VGD 20.5011 R2Z X 265 MM GASKLEP VGD20 5011 RP2"	VANNE GAZ VGD20 5011 RP2" VALVULA GAS VGD20 5011 RP2"	VALVOLA GAS VGD20 5011 RP2"	1
4102	13020950	SERVOMOT. GAS SKP75.003E2 O.ENDSCHALTER SERVOMOTOR SKP 75 003E2, ZONDER EINDSCH.	SERVOMOT. GAZ SKP75.003E2 S.FIN COURSE SERVOMOT. GAS SKP75.003E2 S.TOPE	SERVOMOT. GAS SKP75.003E2 S.FINECORSA	1
4105	13020951	STELLANTRIEB SKP 15.000E2 O.ENDSCHALTER SERVOMOT. GAS SKP15.000E2 Z.EINDSCHAK.	SERVOMOT. GAZ SKP15.000E2 S.FIN COURSE SERVOMOT. GAS SKP15.000E2 S.TOPE	SERVOMOT. GAS SKP15.000E2 S.FINECORSA	1

	6XXXXXXX	DE NL	FR ES	IT	X
4110	13010078	GASDRUCKWÄCHTER GW 150 A5 30-150MB DIN GASDRUKREGELAAR GW 150 A5 30-150MB DIN	MANOSTAT GAZ GW 150 A5 30-150MB DIN MANOSTATO GAS GW 150 A5 30-150MB DIN	PRESSOSTATO GAS GW 150 A5 30-150MB DIN	1
4130	65323019	GASDRUCKWACHTER GW 50 A5 2,5-50MB GASDRUKSCHAKELAAR GW 50 A5 2,5-50MB	MANOSTAT GAZ GW 50 A5 2,5-50MB PRESOSTATO GAS GW 50 A5 2,5-50MB	PRESSOSTATO GAS GW 50 A5 2,5-50MB	1
4150	65301075	GASDRUCKROHR VGD20 RP2 NC95/210-VG5/6 GASDRUIKBUIS VGD20 RP2 NC95/210-VG5/6	TUBE PRES.GAZ VGD20 RP2 NC95/210-VG5/6 TUBO PR. GAS VGD20 RP2 NC95/210-VG5/6	TUBO PRES.GAS VGD20 RP2 NC95/210-VG5/6	1
4160	13023188	WINKELVERSCHRAUBUNG GEBOGEN AANSLUITING	RACCORD COUDE RACOR ACODADO	RACCORDO A GOMITO	1
4170	13009721	VERSCHRAUBUNG PF + PL VERBINDING RECHT	RACCORD DROIT EMPALME RECTO	RACCORDO DESTRO	1
4200	13011733	O-RING-SET D66,35X2,62 NBR 70.5 DICHTINGSKIT VGG,VGF10/VGD20 RP2	KIT JOINTS VGG,VGF10/VGD20 RP2 KIT JUNTAS VGG,VGF10/VGD20 RP2	KIT GUARNIZIONI VGG,VGF10/VGD20 RP2	1
4410	13009700	EXTERNER GASFILTER RP2 FILTER GAS EXTERN RP2	FILTRE GAZ EXTERNE RP2 FILTRO GAS EXTERNO RP2	FILTRO GAS ESTERNO RP2	1
4411	13010044	GASFILTER-EINSATZ+O-RING F.ANELLO R2Z FILTERELEMENT RP2+DICHTING	ELEMENT FILT. RP2+JOINT ELEMENTO FILT. RP2+JUNTA	ELEMENTO FILT. RP2+GUARNIZIONE	1
4505	65301022	GASANSCHLUSSROHR-BG DN65 GASAANSLUITBUIS CPL. DN65	COLLECTEUR COMPLET DN65 COLECTOR GAS CPL DN65	COLLETTORE DN65	1
	65301023	GASANSCHLUSSROHR-BG DN80 GASAANSLUITBUIS CPL. DN80	COLLECTEUR COMPLET DN80 COLECTOR GAS CPL DN80	COLLETTORE DN80	1
4506	13011367	SICHERUNGSRING U.STABILISATOR D60 STABILISATOR+ BORGVEREN D.60	STABILISATEUR+ CIRCLIPS D.60 ESTABILIZADOR+ ANILLO DE RETÉN D.60	STABILIZZATORE+ANELLI ELASTICI D.60	1
4507	13009722	MESSNIPPEL GERADE R1/8Z-VERPACKT DRUKAANSLUITING R1/8	PRISE PRESSION R1/8 TOMA PRESIÓN R1/8	PRESA PRESSIONE R1/8	1
4522	13020682	SCHWENKVERSCHRAUBUNG LCK-G1/8-PK4 ¨BANJO¨ AANSLUITING LCK-G1/8-PK4	RACCORD BANJO LCK-G1/8-PK4 RACOR TIPO ¨BANJO¨ LCK-G1/8-PK4	RACCORDO "BANJO" LCK-G1/8-PK4	1
4530	13020958	VERBINDUNGSKABEL SKP15/SKP75 VERBINDINGSKABEL SKP	CABLE DE LIAISON SKP CABLE DE CONEXIÓN SKP	CAVO DI COLLEGAMENTO SKP	1
4600	65311583	GAS-MV VGD 40.080 DN80 X 310MM GASKLEP VGD40 080 DN80	VANNE GAZ VGD40 080 DN80 VALVULA GAS VGD40 080 DN80	VALVOLA GAS VGD40 080 DN80	1
	65323661	GAS-MV VGD 40.065 GASKLEP VGD40 065 DN65	VANNE GAZ VGD40 065 DN65 VÁLVULA GAS VGD40 065 DN65	VALVOLA GAS VGD40 065 DN65	1
4602	13020950	SERVOMOT. GAS SKP75.003E2 O.ENDSCHALTER SERVOMOTOR SKP 75 003E2, ZONDER EINDSCH.	SERVOMOT. GAZ SKP75.003E2 S.FIN COURSE SERVOMOT. GAS SKP75.003E2 S.TOPE	SERVOMOT. GAS SKP75.003E2 S.FINECORSA	1
4605	13020951	STELLANTRIEB SKP 15.000E2 O.ENDSCHALTER SERVOMOT. GAS SKP15.000E2 Z.EINDSCHAK.	SERVOMOT. GAZ SKP15.000E2 S.FIN COURSE SERVOMOT. GAS SKP15.000E2 S.TOPE	SERVOMOT. GAS SKP15.000E2 S.FINECORSA	1
4610	13010078	GASDRUCKWÄCHTER GW 150 A5 30-150MB DIN GASDRUKREGELAAR GW 150 A5 30-150MB DIN	MANOSTAT GAZ GW 150 A5 30-150MB DIN MANOSTATO GAS GW 150 A5 30-150MB DIN	PRESSOSTATO GAS GW 150 A5 30-150MB DIN	1
4630	65323019	GASDRUCKWACHTER GW 50 A5 2,5-50MB GASDRUKSCHAKELAAR GW 50 A5 2,5-50MB	MANOSTAT GAZ GW 50 A5 2,5-50MB PRESOSTATO GAS GW 50 A5 2,5-50MB	PRESSOSTATO GAS GW 50 A5 2,5-50MB	1
4650	65301025	GASDRUCKROHR VGD40 DN65 NC95/210-VG5/6 GASDRUKBUIS VGD40 DN65 NC95/210-VG5/6	TUBE PR.GAZ EQ.VGD40 DN65 NC95/210-VG5/6 TUBO PR. GAS VGD40 DN65 NC95/210-VG5/6	TUBO PR.GAS CPL.VGD40DN65 NC95/210-VG5/6	1
	65301026	GASDRUCKROHR VGD40 DN80 NC210-VG6 GASDRUKBUIS VGD40 DN80 NC210-VG6	TUBE PRES.GAZ EQ.VGD40 DN80 NC210-VG6 TUBO PR. GAS VGD40 DN80 NC210-VG6	TUBO PR.GAS CPL.VGD40 DN80 NC210-VG6	1
4660	13023188	WINKELVERSCHRAUBUNG GEBOGEN AANSLUITING	RACCORD COUDE RACOR ACODADO	RACCORDO A GOMITO	1
4670	13009721	VERSCHRAUBUNG PF + PL VERBINDING RECHT	RACCORD DROIT EMPALME RECTO	RACCORDO DESTRO	1
4700	13013781	DICHTUNGSSET VGD40 DN66 DICHTINGSKIT VGD40 DN65	KIT JOINTS VGD40 DN65 KIT JUNTAS VGD40 DN65	KIT GUARNIZIONI VGD40 DN65	1
	13013782	O-RING SET VGD DN80 DICHTINGSKIT VGD40 DN80	KIT JOINTS VGD40 DN80 KIT JUNTAS VGD40 DN80	KIT GUARNIZIONI VGD40 DN80	1
4910	13009703	GASFILTER ANELLO DN65/VERPACKT FILTER GAS EXTERN DN65	FILTRE GAZ EXTERNE DN65 FILTRO GAS EXTERNO DN65	FILTRO GAS ESTERNO DN65	1
	13013787	GASFILTER DN80 FILTER GAS DN80	FILTRE GAZ DN80 FILTRO GAS DN80	FILTRO GAS DN80	1
4911	13009704	GASFILTER-EINSATZ+O-RING F.ANELLO DN65 FILTERELEMENT GAS DN65 MET DICHTING	ELEMENT FILTRANT GAZ DN65 AVEC JOINT ELEMENTO FILTRANTE GAS DN65 CON JUNTA	ELEMENTO FILTRANTE GAS DN65 CON GUARNIZ.	1
	13013788	FILTEREINSATZ+O-RING DN80 FILTERELEMENT GAS DN80 MET DICHTING	ELEMENT FILTRANT GAZ DN80 AVEC JOINT ELEMENTO FILTRANTE GAS DN80 CON JUNTA	ELEMENTO FILTRANTE GAS DN80 CON GUARNIZ.	1

	6XXXXXXX	RU TR	PT	PL	X
1005	13009640	УПЛОТНЕНИЕ ВОЗДУХОЗАБОРНИКА HAVA KUTUSU CONTASI	JUNTA CAIXA DE AR	USZCZELKA SKRZYNKI POWIETRZA	1
1020	13009641	ИЗОЛЯЦИЯ ВОЗДУХОЗАБОРНИКА HAVA KUTUSU YALITIMI	ISOLAMENTO CAIXA DE ENTRADA DE AR	USZCZELKA SKRZYNKI POWIETRZA	1
1041	65326804	СЕРВОДВИГАТЕЛЬ STE 4,5 Q3.51/6 3NM L SERVOMOTOR STE 4,5 Q3.51/6 L 3NM	SERVOMOTOR STE 4,5 Q3.51/6 L 3NM	SERWOMOTOR STE 4,5 Q3.51/6 L 3NM	1
1051	65326227	ВОЗДУШНАЯ ЗАСЛОНКА В СБОРЕ DONANIMLI HAVA KLAPESI	FLAP DE AR EQUIP.	PRZEPUSTNICA POWIETRZA Z OSPRZĘTEM	1
1071	65326226	ДЕРЖАТЕЛЬ СЕРВОДВИГАТЕЛЬ DESTEĞI SERVOMOTOR	SUPORTE SERVOMOTOR	WSPORNIK SERWOMOTOR	1
1080	13010055	УПЛОТНЕНИЕ КОЖУХА KARTER CONTASI	JUNTA CAIXA	USZCZELKA KARTERA	1
1090	13016845	МУФТА ПРОПУСКА ПРОВОДА/КАРТЕР KABLO KANALI/KARTER	PASSA-CABOS/CAIXA	PRZELOTKA PRZEWODU/OBUDOWA	1
1100	65301016	ЧЕХОЛ VECTRON5+ V6 +ВИНТ КРЕПЛЕНИЯ DONANIMLI MUHAFAZA KAPAĞI VECTRON5 / V6	EXTRATOR VECTRON5 E V6+PARAFUSO FIXAÇÃO	POKRYWA VECTRON5 I V6 Z OSPRZĘTEM	1
1101	65300519	ВИНТ С ПЛОСКОЙ ГОЛОВКОЙ M5X15 DÜZ BAŞLI VIDA M5X15	PARAFUSO CABEÇA PLANA M5X15	ŚRUBA Z ŁBEM NITOWYM PŁASKIM M5X15	1
1102	13009772	УПЛОТНИТЕЛЬНАЯ ЛЕНТА/КОЖУХ YALITIM BANDI / GÖVDE KAPLAMA	BANDA DE VEDAÇÃO EXAUSTOR	TAŚMA USZCZELNIAJĄCA/POKRYWA	1
1140	13010008	СМОТРОВОЕ СТЕКЛО RÖGAR CAMI	VIGIA	SZKŁO PODGLĄDU	1
1145	13009648	ПРОХОДНАЯ ВТУЛКА ДЛЯ ПРОВОДА KABLO GEÇİRİCİ	PASSA-CABOS	PRZELOT KABLI	1
1170	65326666	ВОЗДУШНЫЙ ВЫПРЯМИТЕЛЬ 148/162 2BL. HAVA DÜZELTİCİ 148/162 2BL.	RECICLAGEM DE AR 148/162 2BL.	PROSTOWNIK POWIETRZA 148/162 2ŁOP.	1
1180	13009738	ДАТЧИК ДАВЛЕНИЯ BASINÇ GİRİŞİ	TORNEIRA DE PRESSÃO	GNIAZDO CIŚNIENIOWE	1
1190	13009649	РАБОЧЕЕ КОЛЕСО D240X82 d19 TÜRBİN D240X82 d19	TURBINA D240X82 d19	WIMIK D240X82 d19	1
	13009736	ТУРБИНА D240X114 d24 D240X114 d24 TÜRBİN	TURBINA D240X114 d24	WIMIK D240X114 d24	1
	13009737	ТУРБИНА D250X114 d24 D250X114 d24 TÜRBİN	TURBINA D250X114 d24	WIMIK D250X114 d24	1
1200	13020723	КРОНШТЕЙН ПНЕВМОРЕЛЕ Д32 HAVA BASINÇ ŞALTERI MESNEDI D32	BASE MANÓSTATO AR D32	WSPORNIK CZUJNIKA CIŚNI. POWIET. D32	1
1210	65300991	РЕЛЕ ДАВЛЕНИЯ ВОЗДУХ HUBA 604 1-10MBAR HAVA BASINÇ ŞALTERI HUBA 604 1-10MBAR	MANÓSTATO DE AR 604 1-10MBAR	CZUJNIK CIŚNIENIA POWIETR. HUBA 604 1-10	1
1220	13009654	ДВИГАТЕЛЬ 1,5 кВт 230/400 В D19 + РАЗЪЕМ 1,5KW 230/400V D19 MOTOR +PRİZ	MOTOR 1,5KW 230/400V D19+PLUGUE	SILNIK 1,5 KW 230/400 V D19+GNIAZDO	1
	13009739	ДВИГАТЕЛЬ 2,2KW230/400V D24+РАЗЪЕМ MOTOR 2,2KW230/400V D24+PRİZ	MOTOR 2,2KW230/400V D24+PLUGUE	SILNIK 2,2 KW 230/400 V D24 + GNIAZDO	1
	13009740	ДВИГАТЕЛЬ 2,5KW230/400V D24+РАЗЪЕМ MOTOR 2,5KW230/400V D24+PRİZ	MOTOR 2,5KW230/400V D24+PLUGUE	SILNIK 2,5 KW 230/400 V D24 + GNIAZDO	1
1230	13014337	ТРУБКА D4/6 TÜP D4/6	TUBO D4/6	RURKA D4/6	1
1510	13009663	ТРАНСФО РОЗЖИГА EBI 2X7,5 230V ATEŞLEME TRAFO. EBI 2X7,5 230V	TRANSFO IGNIÇÃO EBI 2X7,5 230V	TRANSFO ZAPŁONOWY EBI 2X7,5 230V	1
1520	13016457	ДЕРЖАТЕЛЬ ПРЕДОХР-ЛЯ + ПРЕДОХР-ЛЬ 6,3 A SİGORTA TAŞIYICI + 6.3A SİGORTA	PORTA-FUSÍVEL+FUSÍVEL 6,3A	OPRAWA BEZPIECZNIKOWA +BEZPIECZNIK 6,3 A	1
1525	13016028	ПРЕДОХРАНИТЕЛЬ 5X20 6.3A SIGORTA 5X20 6.3A	FUSÍVEL 5X20 6,3A	BEZPIECZNIKA 5X20 6.3A	1
1530	13010007	ПЕРЕКЛЮЧАТЕЛЬ ŞALTER	INTERRUPTOR LIGAR/DESLIGAR	PRZEŁĄCZNIK	1
1540	13014009	ПЕРЕКЛЮЧАТЕЛЬ ŞALTER	INTERRUPTOR - FUNCIONAMENTO	PRZEŁĄCZNIK	1
1550	65301109	ДИСПЛЕЙ БЛОК УПРАВЛЕНИЯ TCG-TCH REL. 2.2 EKRAN IÇIN KUTU TCG-TCH REL. 2.2	VISOR UNIDADE CONTROLE TCG-TCH REL.2.2	WYŚWIETLACZ / MODUŁ TCG-TCH REL.2.2	1
1560	65300992	ПУЛЬТ УПРАВЛЕНИЯ ПЛАСТИКОВЫЙ İŞLETIM MASASI PLASTIK	PLACA DE CONTROLE PLÁSTICA	PLASTIKOWY PULPIT STEROWNICZY	1
1570	65300993	МУФТА ПРОКЛАДКИ ПРОВОДА Д54/Д47/Д36 KABLO KANALI D54/D47/D36	PASSA-CABOS D54/D47/D36	PRZELOTKA PRZEWODU D54/D47/D36	1
1580	13009661	ЗАТВОР/ПУЛЬТ TAPA / KONTROL PANELİ	OBTURADOR INTERFACE	PRZEPUSTNICA / PULPIT	1
1600	65301019	КАБЕЛЬ+РАЗЪЕМ РЕЛЕ ДАВЛЕНИЯ ГАЗА KABLOSU + PRİZ / GAZ BASINÇ ŞALT.	CABO+CONECTOR / PRESSOSTATO GÁS	PRZEWÓD+WTYCZKA CZUJNIKA CIŚNI. GAZU	1
1604	65301034	КАБЕЛЬ РЕЛЕ ДАВЛЕНИЯ ГАЗА KABLOSU + KONEKTÖRÜ/GAZ BASINÇ ŞALT.	CABO+CONECTOR PRESSOSTATO DE GÁS	PRZEWÓD CZUJNIKA CIŚNIENIA GAZU	1
1610	65301020	КАБЕЛЬ+РАЗЪЕМ ГАЗОВОГО КЛАПАНА KABLOSU + PRİZ / GAZ VANASI	CABO+CONECTOR / VÁLVULA DE GÁS	PRZEWÓD+WTYCZKA ZAWORU GAZOW.	1

	6XXXXXXX	RU TR	PT	PL	X
1620	65300997	КАБЕЛЬ / ТРАНСФО РОЗЖИГА KABLOSU / ATEŞLEME TRAFO.	CABO/ACENDEDOR	PRZEWÓD+GNIAZDO/APARAT ZAPŁONOWY	1
1660	65301000	КАБЕЛЬ L560+РАЗЪЕМ 4-ПОЛЮС/ДВИГАТЕЛЬ L560 KABLO +PRİZ 4P/MOTOR	CABO C.560+CONECTOR 4P/MOTOR	KABEL L560+GNIAZDO 4P/SILNIK	1
1670	13009743	КАБЕЛЬ РОЗЖИГА ATEŞLEME KABLOSU	CABO DE IGNIÇÃO	KABEL ZAPALNIKA	1
1700	65300881	БЛОК УПРАВЛЕНИЯ TCG 511.01TC KUTU TCG 511.01TC	PROGRAMADOR TCG 511.01TC	MODUŁ TCG 511.01TC	1
1800	13009778	КОНТАКТОР KONTAKTÖR	CONTATOR	KONTAKTOR	1
1810	13009746	ТЕРМОРЕЛЕ LR2K 5.5-8.0A LR2K 5.5-8.0A TERMİL RÖLE	RELÉ TÉRMICO LR2K 5,5-8,0A	PRZEKAŹNIK TERMICZNY LR2K 5,5–8,0 A	1
2020	13009711	ДЕФЛЕКТОР D168/50 8SL 7DRIL. DEFLEKTOR D168/50 8SL 7DRIL.	DEFLECTOR D168/50 8SL 7DRIL.	DEFLEKTOR D168/50 8SL 7DRIL.	1
	65326673	ДЕФЛЕКТОР D145/50X13,5 8SL. 6DRIL DEFLEKTOR D145/50X13,5 8SL. 6DRIL	DEFLECTOR D145/50X13,5 8SL. 6DRIL	DEFLEKTOR D145/50X13,5 8SL. 6DRIL	1
2040	13009726	БЛОК ЭЛЕКТРОДОВ 27X55 d6,4D2X23 45°+ВИНТ ELEKTROD BLOĞU 27X55 d6,4D2X23 45°+VIDA.	BLOCO ELETROD.27X55 d6,4D2X23 45°+PARAF.	BLOK ELEKTROD 27X55 d6,4D2X23 45° +ŚRUBA	1
2041	13010050	ДЕРЖАТЕЛЬ ЭЛЕКТРОДА ELEKTROT DESTEĞİ	SUPORTE ELÉTRODO	WSPORNIK ELEKTRODY	1
2046	13010049	ВИНТ С БУРТИКОМ M4/БЛОК ЭЛЕКТРОДОВ M4 OMUZLU VİDA/ELEKTROT BLOĞU	PARAFUSO M4/BLOCO DE ELÉTRODOS	ŚRUBA M4/BLOKADA ELEKTROD	1
2047	13009725	ФЛАНЕЦ 20X11X2,6 FIX. ЭЛЕКТРОД FLANŞI 20X11X2,6 FIX. ELEKTROD	FLANGE 20X11X2,6 FIX. ELETRODO	KOŁNIERZ 20X11X2,6 FIX. ELEKTRODA	1
2070	13009727	ЗАПАЛЬНЫЕ ПРОВОДА L950 L950 ATEŞLEME KABLOLARI	CABOS IGNIÇÃO L950	KABEL ZAPALNIKA L950	1
2071	13010056	КРУГЛЫЙ РАЗЪЕМ ЗАПАЛЬН. ПРОВОД ИОН. X2 İYON ALÜMİNYUM KABLO YUVARLAK FİŞ X2	FICHA REDONDA CABO IGN.ION X2	WTYCZKA OKRĄGŁA KABLA ALU JON X2	1
2090	13009626	ДАТЧИК ИОНИЗАЦИОННОГО D8X120 d6,4 D4X36 İYONIZASYON SONDA D8X120 d6,4 D4X36	SONDA IONIZACION D8X120 d6,4 D4X36	SONDA JONIZACYJNY D8X120 d6,4 D4X36	1
2095	13009728	КАБЕЛЬ ИОНИЗАЦИОН. SIL.F.MC4-D6,35X950 İYONIZASYON KABLOSU SIL.F.MC4-D6,35X950	CABO IONIZACION SIL.F.MC4-D6,35X950	PRZEWÓD JONIZACYJNY SIL.F.MC4-D6,35X950	1
2100	13010051	АРМАТУРА ГАЗ. VG6R/NC160/210G KN/T1 DONANIM. GAZ HATTI VG6R/NC160/210G KN/T1	LINHA DE GAS CPL. VG6R/NC160/210G KN/T1	UKŁAD CIŚN. GAZU VG6R/NC160/210G KN/T1	1
	13010052	АРМАТУРА ГАЗ. VG6R/NC160/210G KL/T2 DONANIM. GAZ HATTI VG6R/NC160/210G KL/T2	LINHA DE GAS CPL. VG6R/NC160/210G KL/T2	UKŁAD CIŚN. GAZU VG6R/NC160/210G KL/T2	1
	13010053	АРМАТУРА ГАЗ. VG6R/NC160/210G KM/T3 DONANIM. GAZ HATTI VG6R/NC160/210G KM/T3	LINHA DE GAS CPL. VG6R/NC160/210G KM/T3	UKŁAD CIŚN. GAZU VG6R/NC160/210G KM/T3	1
2120	13009732	ГАЗОВОЕ КОЛЕНО T1/KN T1/KN GAZ DİRSEĞİ	COTOVELO GÁS T1/KN	KOLANKO GAZ. T1/KN	1
	13009733	ГАЗОВОЕ КОЛЕНО T2/KL T2/KL GAZ DİRSEĞİ	COTOVELO GÁS T2/KL	KOLANKO GAZ. T2/KL	1
	13009734	ГАЗОВОЕ КОЛЕНО T3/KM T3/KM GAZ DİRSEĞİ	COTOVELO GÁS T3/KM	KOLANKO GAZ. T3/KM	1
2125	13009731	УПЛОТН. КОЛЬЦО D.75X4 O'RING D.75X4	O-RING D.75X4	O'RING D.75X4	1
2140	13009760	СОПЛО ГОРЕЛКИ D227/172/190 L343 BRÜLÖR BORUSU D227/172/190 L343	TUBO DO QUEIMADOR D227/172/190 L343	RURA PALNIKA D227/172/190 L343	1
	13009761	СОПЛО ГОРЕЛКИ D227/172/190 L543 BRÜLÖR BORUSU D227/172/190 L543	TUBO DO QUEIMADOR D227/172/190 L543	RURA PALNIKA D227/172/190 L543	1
	13009762	СОПЛО ГОРЕЛКИ D227/172/190 L443 BRÜLÖR BORUSU D227/172/190 L443	TUBO DO QUEIMADOR D227/172/190 L443	RURA PALNIKA D227/172/190 L443	1
	65326670	СОПЛО ГОРЕЛКИ D227/145/205 L343 BRÜLÖR BORUSU D227/145/205 L343	TUBO DO QUEIMADOR D227/145/205 L343	RURA PALNIKA D227/145/205 L343	1
	65326671	СОПЛО ГОРЕЛКИ D227/145/205 L543 BRÜLÖR BORUSU D227/145/205 L543	TUBO DO QUEIMADOR D227/145/205 L543	RURA PALNIKA D227/145/205 L543	1
	65326672	СОПЛО ГОРЕЛКИ D227/145/205 L443 BRÜLÖR BORUSU D227/145/205 L443	TUBO DO QUEIMADOR D227/145/205 L443	RURA PALNIKA D227/145/205 L443	1
2145	13009722	ДАТЧИК ДАВЛЕНИЯ R1/8 R1/8 BASINÇ PRİZİ	TOMADA DE PRESSÃO R1/8	GNIAZDO CIŚNIENIOWE R1/8	1
2146	13009721	ШТУЦЕР, ПРАВЫЙ SAĞ RAKOR	CONEXÃO DIREITA	ZŁĄCZE PRAWE	1
2150	13009719	УПЛОТНЕНИЕ/ПЕРЕДН ЧАСТЬ КОТЛА 326X335X3 326X335X3 KAZAN CONTASI/ÖN YÜZÜ	JUNTA/FRENTE CALDEIRA 326X335X3	USZCZELKA/ŚCIANA CZOŁ. KOTŁA 326X335X3	1
2170	13009723	КОМПЛ-Т ВИНТ КРЕПЛЕН ТРУБЫ ГОРЕЛКИ (X3) BRÜLÖR TÜPÜ TESBİT VİDASI KİTİ (X3)	KIT PARAFUSO FIX. TUBO QUEIMADOR (X3)	ZESTAW ŚRUB MOCOW. RURA PALNIKA (X3)	1
2600	13009724	КОМПЛЕКТ ПАЛЬЦЕВ AKS KİTİ	KIT EIXOS	ZESTAW OSI	1
2710	13010048	ПРИНАДЛЕЖ. КОМПЛЕКТ, ПРИРОДН. ГАЗ DOĞAL GAZ KİTİ ERİŞİMİ	ACESS. KIT GÁS NATURAL	AKCESORIA ZESTAWU GAZ. NATURALNY	1
2711	13007041	ПРИНАДЛЕЖН. КОМПЛЕКТ ПРОПАН PROPAN KİTİ ERİŞİMİ	ACESS. KIT PROPANO	AKCESORIA KIT PROPAN	1

	6XXXXXXX	RU TR	PT	PL	X
2712	13010046	ЗАТВОР/ДИФФУЗОР TAPA/ DİFÜZÖR	OBTURADOR/DIFUSOR	PRZEPUSTNICA/DYFUZOR	1
2714	13010047	ГАЗОВЫЕ ДИФФУЗОРЫ В СБОРЕ DONATILMIS GAZ DIFUZORLER	DIFUSORES GAS CPL.	DYSZ GAZU Z WYP.	1
2718	13014075	ДИФФУЗОР РОЗЖИГА ATEŞLEME DİFÜZÖRÜ	DIFUSOR IGNIÇÃO	DYFUZOR ZAPALNIKA	1
2785	13009730	ГАЗОВАЯ РАЗВОДКА GAZ YILDIZ	ESTRELLA GAS	ZŁĄCZE GWIAZDOWE	1
3005	13014122	КОЛЛЕКТОР В СБОРЕ RP 1¨1/4 RP 1¨1/4 MONTAJLI KOLEKTÖR	COLETOR MONTADO RP 1¨1/4	KOLEKTOR MONTE RP 1¨1/4	1
	13014128	КОЛЛЕКТОР В СБОРЕ RP 2 RP 2 MONTAJLI KOLEKTÖR	COLETOR MONTADO RP 2	KOLEKTOR MONTE RP 2	1
3006	13011367	СТАБИЛИЗАТОР + СТОПОРНОЕ КОЛЬЦО D.60 STABİLİZATÖR + CIRCLIPS D.60	ESTABILIZADOR+ANÉIS RETENÇÃO D.60	STABILIZATOR+ CIRCLIPS D.60	1
3007	13009722	ДАТЧИК ДАВЛЕНИЯ R1/8 R1/8 BASINÇ PRİZİ	TOMADA DE PRESSÃO R1/8	GNIAZDO CIŚNIENIOWE R1/8	1
3022	13020682	ШТУЦЕР ¨БАНДЖО¨ LCK-G1/8-PK4 ¨BANJO¨ RAKOR LCK-G1/8-PK4	CONEXÃO ¨BANJO¨ LCK-G1/8-PK4	ZŁĄCZE ¨BANJO¨ LCK-G1/8-PK4	1
3040	13007859	ФЛАНЕЦ MB420 RP2 W.PRES.PLUG FLANŞI MB420 RP2 W.PRES.PLUG	FLANGE MB420 RP2 W.PRES.PLUG	KOŁNIERZ MB420 RP2 W.PRES.PLUG	1
	13010085	ФЛАНЕЦ MB410/412 RP1 1/4 FLANŞI MB410/412 RP1 1/4	FLANGE MB410/412 RP1 1/4	KOŁNIERZ MB410/412 RP1 1/4	1
3100	65301036	ГАЗОВЫЙ КЛАПАН MBVEF412 B01 S32 RP1"1/4 GAZ VANASI MBVEF412 B01 S32 RP1"1/4	VÁLVULA GÁS MBVEF412 B01 S32 RP1 1/4	ZAWÓR GAZOWY MBVEF412 B01 S32 RP1"1/4	1
	65301037	ГАЗОВЫЙ КЛАПАН MBVEF420 B01 S32 RP2" GAZ VANASI MBVEF420 B01 S32 RP2"	VALVULA GAS MBVEF420 B01 S32 RP2"	ZAWÓR GAZOWY MBVEF420 B01 S32 RP2"	1
3110	13010078	РЕГУЛ ДАВЛ. ГАЗА. GW 150 A5 30—150MB DIN GW 150 A5 30-150MB DIN GAZ MANOSTATI	PRESSOSTATO GÁS GW 150 A5 30-150MB DIN	CZUJNIK CIŚ. GAZU GW 150 A5 30-150MB DIN	1
3120	65300707	ОБМОТКА DUN MBVEF412S12 BOBIN DUN MBVEF412S12	BOBINA DUN MBVEF412S12	CEWKA DUN MBVEF412S12	1
	65300708	ОБМОТКА DUN MBVEF420S12 BOBIN DUN MBVEF420S12	BOBINA DUN MBVEF420S12	CEWKA DUN MBVEF420S12	1
3130	65323019	РЕЛЕ ДАВ. ВОЗДУХА GW 50 A5 2,5-50MB GAZ BASINÇ ŞALT. GW 50 A5 2,5-50MB	PRESSOSTATO GAS GW 50 A5 2,5-50MB	CZUJNIK CIŚ. GAZU GW 50 A5 2,5-50MB	1
3140	13007901	ФИЛЬТРУЮЩИЙ ЭЛЕМЕНТ/MB...420 FİLTRELEYİCİ ELEMAN /MB...420	ELEMENTO FILTRANTE /MB...420	ELEMENT FILTRUJĄCY /MB...420	1
	13016012	ФИЛЬТР. ЭЛЕМЕНТ/MB...410/412 FİLTRE ELEMANI /MB...410/412	ELEMENTO FILTRANTE /MB...410/412	ELEMENT FILTRUJĄCY /MB...410/412	1
3150	65300649	ТРУБКА ОТБОРА ДАВЛЕНИЯ ГАЗА MBVEF412 GAZ BASINÇ BORUSU MBVEF412+RAKOR.	TUBO DE PRESSÃO GÁS MBVEF412+CONEXÃO	RURA CIŚNIE. GAZU MBVEF412+ZŁĄCZEM	1
	65300669	ТРУБКА ОТБОРА ДАВЛЕНИЯ ГАЗА MBVEF420 GAZ BASINÇ BORUSU MBVEF420+RAKOR.	TUBO DE PRESSÃO GÁS MBVEF420+CONEXÃO	RURA CIŚNIE. GAZU MBVEF420+ZŁĄCZEM	1
3160	13023188	УГЛОВОЙ ШТУЦЕР DIRSEKLI RAKOR	CONEXÃO COTOVELO	ZŁĄCZKA TYPU KOLANKO	1
3170	13023187	ШТУЦЕР G1/8 + УПЛОТНЕНИЕ RAKOR G1/8 + CONTA	CONEXÃO G1/8+JUNTA	ZŁĄCZE G1/8 + USZCZELKA	1
3200	65300576	КОМПЛЕКТ ПРОКЛАДОК MB...412 CONTA KITI MB...412	KIT JUNTAS MB...412	ZESTAW USZCZELEK MB...412	1
	65300671	КОМПЛЕКТ УПЛОТНЕНИЙ MB...420 CONTA KİTİ MB...420	KIT JUNTAS MB...420	ZESTAW USZCZELEK MB...420	1
3410	13009700	ГАЗ ФИЛЬТР ВНЕШНИЙ RP2 RP2 HARİCİ GAZ FİLTRESİ	FILTRO GÁS EXTERNO RP2	FILTR GAZU	1
3411	13010044	ФИЛЬТР. ЭЛЕМЕНТ RP2 + УПЛОТНЕНИЕ RP2 FİLTRE ELEMANI + CONTA	ELEMENTO FILT. RP2+O-RING	ELEMENT FILT. RP2+USZCZELKA	1
4005	65301024	КОЛЛЕКТОР В СБОРЕ RP2 MANIFOLD KMPL. RP2	TUBO ABASTECIMENTO DE GÁS CPL. RP2	KOLEKTOR KOMPL. RP2	1
4006	13011367	СТАБИЛИЗАТОР + СТОПОРНОЕ КОЛЬЦО D.60 STABİLİZATÖR + CIRCLIPS D.60	ESTABILIZADOR+ANÉIS RETENÇÃO D.60	STABILIZATOR+ CIRCLIPS D.60	1
4007	13009722	ДАТЧИК ДАВЛЕНИЯ R1/8 R1/8 BASINÇ PRİZİ	TOMADA DE PRESSÃO R1/8	GNIAZDO CIŚNIENIOWE R1/8	1
4022	13020682	ШТУЦЕР ¨БАНДЖО¨ LCK-G1/8-PK4 ¨BANJO¨ RAKOR LCK-G1/8-PK4	CONEXÃO ¨BANJO¨ LCK-G1/8-PK4	ZŁĄCZE ¨BANJO¨ LCK-G1/8-PK4	1
4030	13020958	СОЕДИНИТЕЛЬНЫЙ КАБЕЛЬ SKP SKP BAĞLANTI KABLOSU	CABO DE CONEXÃO SKP	KABEL ŁĄCZĄCY SKP	1
4040	65300871	ФЛАНЕЦ AGA51 RP2 FLANŞI AGA51 RP2	FLANGE AGA51 RP2	KOŁNIERZ AGA51 RP2	1
4100	65311581	ГАЗОВЫЙ КЛАПАН VGD20 5011 RP2" GAZ VANASI VGD20 5011 RP2"	VALVULA GAS VGD20 5011 RP2"	ZAWÓR GAZOWY VGD20 5011 RP2"	1
4102	13020950	ИСП. МЕХАНИЗМ ГАЗ SKP75.003E2 S.КОНЦЕВОЙ KURS SONSUZ SKP75.003E2 GAZ SERVOMOTORU	ATUADOR GÁS SKP75.003E2 S.FIM CURSO	SIŁOWNIK GAZ. SKP75.003E2 S.WYŁ.KRAŃCOWY	1
4105	13020951	ИСП. МЕХАНИЗМ ГАЗ SKP15.000E2 S.КОНЦЕВОЙ KURS SONSUZ SKP15.000E2 GAZ SERVOMOTORU	ATUADOR GÁS SKP15.000E2 S.FIM CURSO	SIŁOWNIK GAZ. SKP15.000E2 S.WYŁ.KRAŃCOWY	1

	6XXXXXXX	RU TR	PT	PL	X
4110	13010078	РЕГУЛ ДАВЛ. ГАЗА. GW 150 A5 30—150MB DIN GW 150 A5 30-150MB DIN GAZ MANOSTATI	PRESSOSTATO GÁS GW 150 A5 30-150MB DIN	CZUJNIK CIŚ. GAZU GW 150 A5 30-150MB DIN	1
4130	65323019	РЕЛЕ ДАВ. ВОЗДУХА GW 50 A5 2,5-50MB GAZ BASINÇ ŞALT. GW 50 A5 2,5-50MB	PRESSOSTATO GAS GW 50 A5 2,5-50MB	CZUJNIK CIŚ. GAZU GW 50 A5 2,5-50MB	1
4150	65301075	ТРУБ. ОТБОРА VGD20 RP2 NC95/210-VG5/6 TUPLU GAZ BASI. VGD20 RP2 NC95/210-VG5/6	TB. PRESSÃO GÁS VGD20 RP2 NC95/210-VG5/6	RURA CIŚNIENI VGD20 RP2 NC95/210-VG5/6	1
4160	13023188	УГЛОВОЙ ШТУЦЕР DIRSEKLI RAKOR	CONEXÃO COTOVELO	ZŁĄCZKA TYPU KOLANKO	1
4170	13009721	ШТУЦЕР, ПРАВЫЙ SAĞ RAKOR	CONEXÃO DIREITA	ZŁĄCZE PRAWE	1
4200	13011733	КОМП-КТ УПЛОТНЕНИЙ VGG,VGF10/VGD20 RP2 VGG,VGF10/VGD20 RP2 CONTA KİTİ	KIT VEDAÇÕES VGG,VGF10/VGD20 RP2	ZESTAW USZCZELEK VGG,VGF10/VGD20 RP2	1
4410	13009700	ГАЗ ФИЛЬТР ВНЕШНИЙ RP2 RP2 HARİCİ GAZ FİLTRESİ	FILTRO GÁS EXTERNO RP2	FILTR GAZU	1
4411	13010044	ФИЛЬТР. ЭЛЕМЕНТ RP2 + УПЛОТНЕНИЕ RP2 FİLTRE ELEMANI + CONTA	ELEMENTO FILT. RP2+O-RING	ELEMENT FILT. RP2+USZCZELKA	1
4505	65301022	КОЛЛЕКТОР В СБОРЕ DN65 MANIFOLD KMPL. DN65	TUBO ABASTECIMENTO GÁS COMPLETO DN65	KOLEKTOR KOMPL. DN65	1
	65301023	КОЛЛЕКТОР В СБОРЕ DN80 MANIFOLD KMPL. DN80	TUBO ABASTECIMENTO GÁS COMPLETO DN80	KOLEKTOR KOMPL. DN80	1
4506	13011367	СТАБИЛИЗАТОР + СТОПОРНОЕ КОЛЬЦО D.60 STABİLİZATÖR + CIRCLIPS D.60	ESTABILIZADOR+ANÉIS RETENÇÃO D.60	STABILIZATOR+ CIRCLIPS D.60	1
4507	13009722	ДАТЧИК ДАВЛЕНИЯ R1/8 R1/8 BASINÇ PRİZİ	TOMADA DE PRESSÃO R1/8	GNIAZDO CIŚNIENIOWE R1/8	1
4522	13020682	ШТУЦЕР ¨БАНДЖО¨ LCK-G1/8-PK4 ¨BANJO¨ RAKOR LCK-G1/8-PK4	CONEXÃO ¨BANJO¨ LCK-G1/8-PK4	ZŁĄCZE ¨BANJO¨ LCK-G1/8-PK4	1
4530	13020958	СОЕДИНИТЕЛЬНЫЙ КАБЕЛЬ SKP SKP BAĞLANTI KABLOSU	CABO DE CONEXÃO SKP	KABEL ŁĄCZĄCY SKP	1
4600	65311583	ГАЗОВЫЙ КЛАПАН VGD40 080 DN80 GAZ VANASI VGD40 080 DN80	VALVULA GAS VGD40 080 DN80	ZAWÓR GAZOWY VGD40 080 DN80	1
	65323661	ГАЗОВЫЙ КЛАПАН VGD40 065 DN65 GAZ VANASI VGD40 065 DN65	VÁLVULA GÁS VGD40 065 DN65	ZAWÓR GAZOWY VGD40 065 DN65	1
4602	13020950	ИСП. МЕХАНИЗМ ГАЗ SKP75.003E2 S.КОНЦЕВОЙ KURS SONSUZ SKP75.003E2 GAZ SERVOMOTORU	ATUADOR GÁS SKP75.003E2 S.FIM CURSO	SIŁOWNIK GAZ. SKP75.003E2 S.WYŁ.KRAŃCOWY	1
4605	13020951	ИСП. МЕХАНИЗМ ГАЗ SKP15.000E2 S.КОНЦЕВОЙ KURS SONSUZ SKP15.000E2 GAZ SERVOMOTORU	ATUADOR GÁS SKP15.000E2 S.FIM CURSO	SIŁOWNIK GAZ. SKP15.000E2 S.WYŁ.KRAŃCOWY	1
4610	13010078	РЕГУЛ ДАВЛ. ГАЗА. GW 150 A5 30—150MB DIN GW 150 A5 30-150MB DIN GAZ MANOSTATI	PRESSOSTATO GÁS GW 150 A5 30-150MB DIN	CZUJNIK CIŚ. GAZU GW 150 A5 30-150MB DIN	1
4630	65323019	РЕЛЕ ДАВ. ВОЗДУХА GW 50 A5 2,5-50MB GAZ BASINÇ ŞALT. GW 50 A5 2,5-50MB	PRESSOSTATO GAS GW 50 A5 2,5-50MB	CZUJNIK CIŚ. GAZU GW 50 A5 2,5-50MB	1
4650	65301025	ТРУБ. ОТБОРА VGD40 DN65 NC95/210-VG5/6 RAKOR.GAZ BASINÇ BO. DN65 NC95/210-VG5/6	TB. PR.GÁS CPL.VGD40 DN65 NC95/210-VG5/6	RURA CIŚNIENI VGD40 DN65 NC95/210-VG5/6	1
	65301026	ТРУБ. ОТБОРА VGD40 DN80 NC210-VG6 RAKOR.GAZ BASINÇ BO.VGD40 DN80 NC210-VG6	TUBO PRESS.GAS VGD40 DN80 NC210-VG6	RURA CIŚNIENI VGD40 DN80 NC210-VG6	1
4660	13023188	УГЛОВОЙ ШТУЦЕР DIRSEKLI RAKOR	CONEXÃO COTOVELO	ZŁĄCZKA TYPU KOLANKO	1
4670	13009721	ШТУЦЕР, ПРАВЫЙ SAĞ RAKOR	CONEXÃO DIREITA	ZŁĄCZE PRAWE	1
4700	13013781	КОМПЛЕКТ УПЛОТНЕНИЙ VGD40 DN65 VGD40 DN65 CONTA KİTİ	KIT VEDAÇÕES VGD40 DN65	ZESTAW USZCZELEK VGD40 DN65	1
	13013782	КОМПЛЕКТ УПЛОТНЕНИЙ VGD40 DN80 VGD40 DN80 CONTA KİTİ	KIT JUNTAS VGD40 DN80	ZESTAW USZCZELEK VGD40 DN80	1
4910	13009703	ГАЗ ФИЛЬТР ВНЕШНИЙ DN65 DN65 HARİCİ GAZ FİLTRESİ	FILTRO GÁS EXTERNO DN65	FILTR ZEWNĘTRZNY DN 65	1
	13013787	ГАЗ. ФИЛЬТР DN80 DN80 GAZ FİLTRESİ	FILTRO GÁS DN80	FILTR GAZ. DN80	1
4911	13009704	ГАЗ. ФИЛЬТРУЮЩИЙ ЭЛЕМЕНТ DN65 С УПЛОТН. CONTALI DN65 GAZ FİLTRE ELEMANI	ELEMENTO FILTRANTE GÁS DN65 COM O-RING	ELEMENT FILTRUJĄCY GAZ. DN65 Z USZCZELKĄ	1
	13013788	ГАЗ. ФИЛЬТРУЮЩИЙ ЭЛЕМЕНТ DN80 С УПЛОТН. CONTA İLE DN80 GAZ FİLTRE EDİCİ ELEMAN	ELEMENTO FILTRANTE GÁS DN80 COM JUNTA	ELEMENT FILTRUJĄCY GAZ. DN80 Z USZCZELKĄ	1

	6XXXXXXX				X

	6XXXXXXX				X