Contents

SUMMARY DESCRIPTION **2**

IMPORTANT NOTES **2**

SAFETY INSTRUCTIONS 2
INTENDED USE 2
NOTE FOR THE EQUIPMENT OPERATOR 3
MEANING OF SYMBOLS AND SIGNAL TERMS USED 4

PRODUCT INFORMATION **5**

APPLICATION 5
DESIGN AND FUNCTION 5
MODEL FUNCTIONS 5
TYPE OVERVIEW 5
ORDER INFORMATION 6
TECHNICAL DATA 7
DIMENSIONAL DRAWING 8
BLOCK DIAGRAM 9
CE STATEMENT OF CONFORMITY 9
TIMINGS 10
CONNECTION DIAGRAM AND PROCESS DIAGRAM 10

APPLICATION-SPECIFIC FEATURES **11**

INFORMATION SYSTEM 11
PROGRAM SEQUENCE DISPLAY 12
LOCKING AND UNLOCKING 12
FLAME MONITORING 12
STRAY LIGHT MONITORING 13

ASSEMBLY AND INSTALLATION **13**

SAFETY INSTRUCTIONS 13
ASSEMBLY AND ELECTRICAL INSTALLATION 13
FLAME MONITORING 13

STARTUP AND INSPECTION **14**

SAFETY NOTE 14
FUNCTION CHECK 14

LOCKOUT CONDITIONS **15**

POTENTIAL FAULTS 15
LOCKOUT DIAGNOSTICS 16

REPAIR AND DISPOSAL **17**

Rev.	Description	Date	E.C.N.	Sign.
C	Added DKG972-N Mod. 33 & 34 - Fixed typing errors on Technical data paragraph	30-10-2012	0066661	MasPia
B	Added functional statements and deleted *Line voltage monitoring* paragraph	03-24-2011	0076345	MasPia
A	First issue.	01-07-2008	0036115	AleCas

ПРОМЭЛЕКТРОНИКА/ sales@prom-elec.com



Summary description

The burner control boxes DKG972-N control and supervise 2 stage atmospheric burners. They are tested and approved according to EN298:2003 and to EN230:2005. They can also be used with direct air heaters (DIN 4794).

Important Notes

Safety instructions

1. Comply with the operating instructions.
2. Use the device as
   - intended
   - in flawless condition,
   - aware of safety and hazards.
3. Note that all assembly, startup, maintenance and adjustment activities may only be performed by authorized skilled technicians.
4. Malfunctions that may compromise safety must be remedied immediately.
5. We do not assume liability for damages and operating malfunctions resulting from disregard of these instructions or improper handling of the digital burner control boxes!

In regard to construction and program sequence, the burner controllers DKG97x-N correspond to the applicable European directives, standards and regulations (see PRODUCT INFORMATION).

Intended use

The digital burner control boxes DKG 972-N are solely intended for OEMs using the controller in or on their products. The

Rev.	Description	Date	E.C.N.	Sign.
C	Added DKG972-N Mod. 33 & 34 - Fixed typing errors on Technical data paragraph	30-10-2012	0066661	MasPia
B	Added functional statements and deleted *Line voltage monitoring* paragraph	03-24-2011	0076345	MasPia
A	First issue.	01-07-2008	0036115	AleCas

control box DKG972-N will functionally replace the control box DKG972.

The intended use also includes observing the operating instructions.

Any other or additional use is considered not in compliance with the intended use. The manufacturer is not liable for resulting damages.

Note for the equipment operator



The equipment operator shall exclusively follow the instructions and safety notes of the corresponding operating and maintenance instructions of the burner or heater manufacturer.

Rev.	Description	Date	E.C.N.	Sign.
C	Added DKG972-N Mod. 33 & 34 - Fixed typing errors on Technical data paragraph	30-10-2012	0066661	MasPia
B	Added functional statements and deleted *Line voltage monitoring* paragraph	03-24-2011	0076345	MasPia
A	First issue.	01-07-2008	0036115	AleCas

Meaning of symbols and signal terms used

Symbol	Danger term and structure	Meaning
	DANGER!	**Safety note - High danger potential**
	Description of danger location and danger • Measures for danger prevention	High risk, disregard leads to irreversible personal injury and even death or significant property damage. Prohibiting symbol (complemented by specific pictograph) in conjunction with the term **'DANGER'**
	DANGER!	**Safety note - High danger potential**
	Description of danger location and danger • Measures for danger prevention	High risk, disregard leads to irreversible personal injury and even death or significant property damage. Attention symbol (complemented by specific pictograph) in conjunction with the term **'DANGER'**
	WARNING!	**Safety note - Medium danger potential**
	Description of danger location and danger • Measures for danger prevention	Medium risk, disregard may lead to irreversible personal injury and even death or significant property damage. Attention symbol (complemented by specific pictograph) in conjunction with the term 'WARNING'
	CAUTION!	**Safety note - Low danger potential**
	Description of danger location and danger • Measures for danger prevention	Low risk, disregard may lead to light personal injuries or light property damage. Attention symbol (complemented by specific pictograph) in conjunction with the term 'CAUTION'
	Description of instruction	**Instruction, e.g. required protective measures** No danger term, round symbol (complemented by instruction-related pictograph)
	Text	**Note, tip or important information**

Rev.	Description	Date	E.C.N.	Sign.
C	Added DKG972-N Mod. 33 & 34 - Fixed typing errors on Technical data paragraph	30-10-2012	0066661	MasPia
B	Added functional statements and deleted *Line voltage monitoring* paragraph	03-24-2011	0076345	MasPia
A	First issue.	01-07-2008	0036115	AleCas

Product Information

Application

The burner controllers DKG 972-N control and supervise 2 stage atmospheric burners. They are tested and approved according to EN298:2003. They can also be used with direct air heaters (DIN 4794).

Possible flame sensors:

- Ionization probe
- Infrared flame detector IRD 1020.1

Design and Function

The enclosure consists of a flame-resistant plug-in type plastic housing.

Microprocessor, electronic components, output relay, automatic flame guard are arranged on a printed circuit board. well-protected in the housing.

The LEDs for the information system are located on the top of the housing.

Stable timings are achieved with the microprocessor-controlled program sequence, independent of:

- fluctuations of the line voltage
- ambient temperature
- starting cycles

The built-in visual information system not only permits continuous monitoring of the current events (useful especially to monitoring the starting process) but also provides information on causes of a possible lockout.

In each instance, the last error causes are stored in the device and can even be reconstructed after a voltage drop when the unit is switched on again.

The design of the burner controllers provides safety against low voltage conditions; thus the system is not endangered even in case of extreme voltage drops.

Model functions

Listed are the features of the family:

- 2-stage featured
- restart / repetitive or fault lockout / blocking in case of flame failure after safety time or in case of flame failure during operation
- IR data transfer to PC
- with fault indicator (LED)
- only non-volatile lockout possible

pin to pin compatibility with previous product family DKG 972

Type overview

Product Family DKG 972-N consists on one standard product with different software customizations (Model) - see below.

Order information

DMG 972-N Burner control boxes

Article	Order text	Item no.
Control box	DKG 972-N Mod.03	0432003
Control box	DKG 972-N Mod.05	0432005
Control box	DKG 972-N Mod.10	0432010
Control box	DKG 972-N Mod.20	0432020
Control box	DKG 972-N Mod.21	0432021
Control box	DKG 972-N Mod.27	0432027
Control box	DKG 972-N Mod.28	0432028
Control box	DKG 972-N Mod.30	0432030
Control box	DKG 972-N Mod.31	0432031
Control box	DKG 972-N Mod.32	0432032
Control box	DKG 972-N Mod.33	R7243A1019
Control box	DKG 972-N Mod.34	0432034

Accessories

Item	Order text	Item no.
Flame detector	IRD 1020.1 axial	16532
Flame detector	IRD 1020.1 left	16533
Flame detector	IRD 1020.1 right	16531
Bracket	Bracket M 93 for IRD 1020.1	59093
Sensor cable	3-pole, 0.6 m	7236001
Socket	Socket S98	75310

The above ordering information refers to standard design. The sales program also includes special designs.

Technical data

Operating voltage	230 V (-15... +10%) 50/60 Hz (±5%)
Series fuse	10 A fast, 6 A slow
Consumption	Approx. 12 VA
Max. load per terminal:	
- Terminal 3 Ignition transformer output	1.0 A – cos φ 0.2
- Terminal 4 Motor	2.0 A – cos φ 0.4
- Terminal 5 Electro valve1	0.5 A – cos φ 0.4
- Terminal 6 Electro valve2	0.5 A – cos φ 0.4
- Terminal 7 Lockout	0.5 A – cos φ 0.4
Total	4.0 A – cos φ 0.4 Max. 16 A during 0.5 sec
Min. required ionization current (flame on level)	1 µA
Sensitivity, operation (flame off level)	0.7 µA
Stray light sensitivity	0.4 µA
Max. ionization current	26 µA
Probe isolation	Probe – Earth greater than 50 MΩ
Stray capacitance	Probe – Earth smaller than 1000 pF
Length of cables:	
- Release Cable, Lockout signal cable	> 10 m
- Air Dumper signal	< 10 m
- Flame signal cable	< 3 m
- other cables	< 1 m
Weight	175 g
Protection class	IP 40
Approved temperature range *- Operation* *- Storage*	 -20 °C... +60 °C -20 °C... +80 °C
Ice formation, water impact and condensation	are not permitted
Tested according to European standard	EN 298:2003, as well as all supporting regulations and directives. EN230:2005
EN298 classification	ATLLXN

Dimensional drawing

The maximum mechanical outline dimensions of the plastic box hosting the control box DMG97x-N are reported:

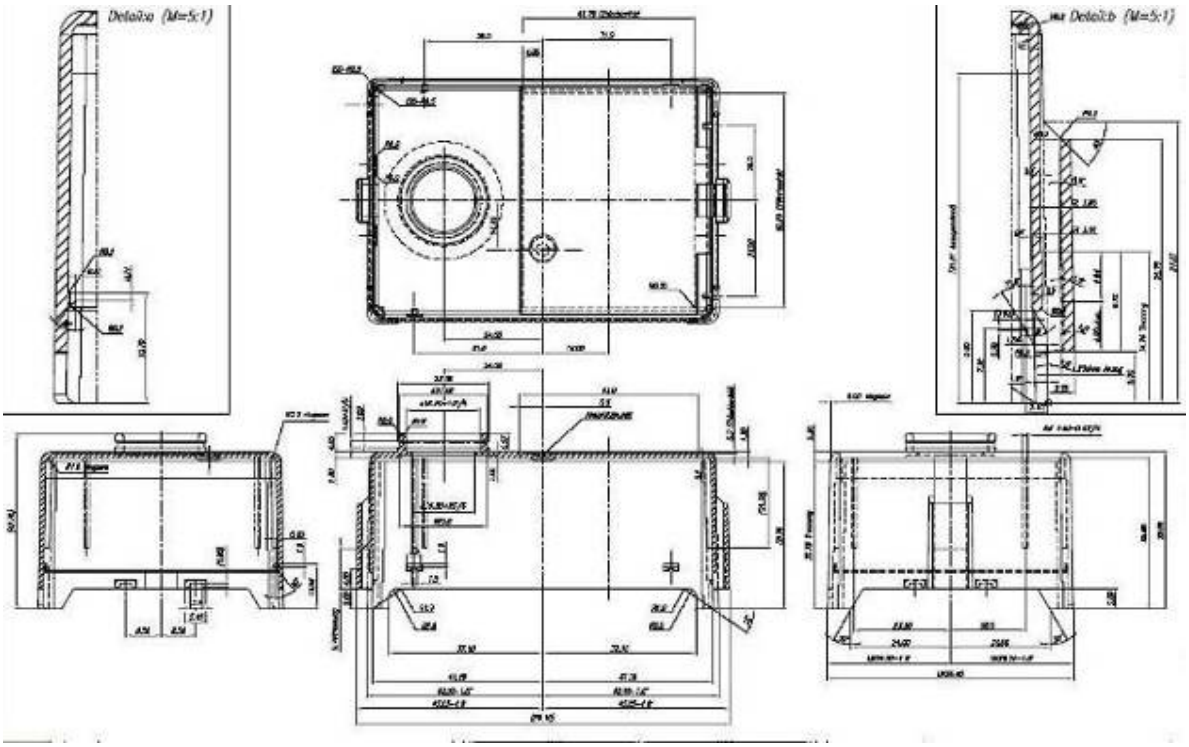

Rev.	Description	Date	E.C.N.	Sign.
C	Added DKG972-N Mod. 33 & 34 - Fixed typing errors on Technical data paragraph	30-10-2012	0066661	MasPia
B	Added functional statements and deleted *Line voltage monitoring* paragraph	03-24-2011	0076345	MasPia
A	First issue.	01-07-2008	0036115	AleCas

Block Diagram - see Connection diagram and process diagram section for legend.

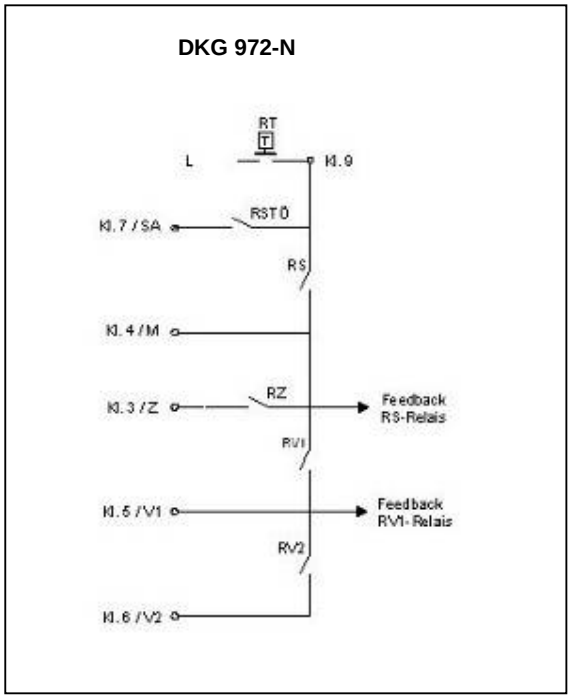

CE Statement of conformity

The products DKG 972-N meet the basic requirements of the following directive:

- EG type testing (Module B) according to pressure device directives 97/23/EG in conjunction with EN298:2003
  Basic safety requirements according to Appendix 1
  TÜV CERT certificate no.: C-F 1378-00/08
- Gas devices directives 90/396/EWG in conjunction with
  EN298:2003 and EN230:2005 - DVGW reference number: CE-0085BT0128
- Low-voltage directives 73/23/EWG in conjunction with the relevant standards.
- EMC directives 89/336/EWG in conjunction with the relevant standards.

Rev.	Description	Date	E.C.N.	Sign.
C	Added DKG972-N Mod. 33 & 34 - Fixed typing errors on Technical data paragraph	30-10-2012	0066661	MasPia
B	Added functional statements and deleted *Line voltage monitoring* paragraph	03-24-2011	0076345	MasPia
A	First issue.	01-07-2008	0036115	AleCas

Timings

DKG 972-N Burner control boxes

Mod.	tw s	tvz s	tn s	tf s	ts S	tv2 S
03	12	3	2,5	5	3	25
05	12	3	3,8	5	5	25
10	12	3	8,8	5	10	25
20	12	3	18,8	5	20	25
21	12	3	8,8	5	10	25
27	5	10	8,8	5	10	19,5
28	12	3	3,8	5	5	25
30	12	3	13,8	5	15	25
31	3	-	3,8	5	5	25
32	12	3	48,8	5	50	55
33	1,5	0	2,5	1,5	3	9
34	0	15	9,5	5	10	25

Special Features:
All models (except Mod. 28 & Mod. 31) perform re-start 4 times after flame loss.
Mod. 28 & Mod. 31 re-start = 0

Mod. 21 no blinking until running

Mod. 27 re-starts after flame loss and when no flame after safety time

Mod. 28, 31 and 33 no re-start (lock-out after flame-loss or fault occurs).
There is no re-start after flame loss in stabilization (only in running mode).

Mod. 30 no blinking during start-up and operation

Mod. 32 unlimited re-start after flame-loss

Connection diagram and process diagram

CAUTION!



Use only the connection schema for the wiring noted for the respective model variant (see type overview).

- Wrong wiring will cause faulty functions!

Rev.	Description	Date	E.C.N.	Sign.
C	Added DKG972-N Mod. 33 & 34 - Fixed typing errors on Technical data paragraph	30-10-2012	0066661	MasPia
B	Added functional statements and deleted *Line voltage monitoring* paragraph	03-24-2011	0076345	MasPia
A	First issue.	01-07-2008	0036115	AleCas

DKG 972-N, connection diagram:

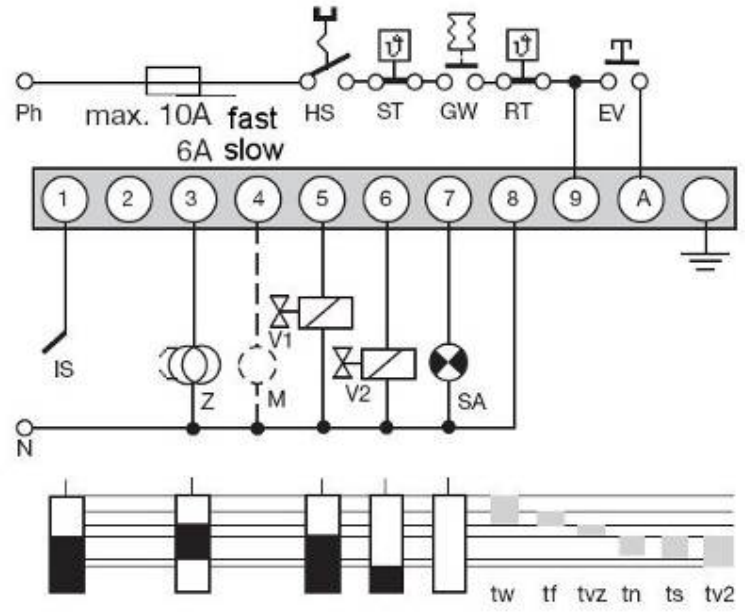

Legend:

tw	waiting time	HS	Main switch	IS	Ionization probe (IRD1020.1 - see separate connection schema)
tvz	Pre-ignition time	ST	High Temperature Limiter	Z	Ignition electrode
tf	Stray light monitoring	GW	Gas Control switch	M	Motor
ts	Safety time	RT	Control thermostat	V1	Solenoid valve 1st stage
tn	Post-ignition time	EV	External unlocking/locking	V2	Solenoid valve 2nd stage
tv2	2nd stage delay			SA	External fault indicator

Application-specific features

Information system

The information system indicates the processes in the burner control. It provides constant information on the program phase the digital burner control box is currently in.

The information system allows to immediately reveal burner faults during start or operation.

If the cause of the fault cannot be analyzed immediately on site, this can be done later thanks to the non-volatile memory.

Once the digital burner control boxes has been reset, the cause of the fault can visually no longer be detected.

Rev.	Description	Date	E.C.N.	Sign.
C	Added DKG972-N Mod. 33 & 34 - Fixed typing errors on Technical data paragraph	30-10-2012	0066661	MasPia
B	Added functional statements and deleted *Line voltage monitoring* paragraph	03-24-2011	0076345	MasPia
A	First issue.	01-07-2008	0036115	AleCas

The messages of the information system are visualized via a LED using a blinking code (like a Morse code). With the help of an (optional) accessory device, these messages can also be recorded and displayed in plain text.

Program sequence display

The built-in microprocessor controls both the information system and the program sequence. The individual phases of the program sequence are indicated as blinking code as follows:

Message	Blinking code
Control pause, no heat request	I □
Burner starts	I I I
Burner in operation	I
Line voltage or frequency not in the permissible range	I □ □

Legend:

I = short pulse
□ = long pulse

Locking and unlocking

The device can be locked (fault occurred) or unlocked (fault remedied) in the following way:

- External

Fault elimination is done via an external button connecting Terminal 9 with Terminal A.

If the button is pushed longer than 3 seconds and released again during normal operation, the device switches to fault mode.



Locking or unlocking of the device is only possible when line voltage has been applied to it!

Flame monitoring

Flame monitoring can be conducted with the following flame sensors:

- Ionization probe, temperature-resistant material. Material and isolation like ignition electrode
- Infrared flicker detector IRD 1020.1 with bracket M93.

Flame monitoring with ionization probe is only possible in networks with grounded neutral. When connecting the IRD 1020.1, correct wiring must be ensured.

Stray light monitoring

Stray light monitoring takes place during the period specified in the technical data at the end of pre-purge.

Assembly and installation

Safety instructions

WARNING!



- Assembly may only be performed by trained personnel. The relevant national installation regulations must be observed.
- The series fuses are to be chosen so that the limit values specified under TECHNICAL DATA are positively not exceeded! Disregarding this stipulation may have serious implications for burner control box or system in case of a short-circuit!
- The burner control box may only be plugged in and unplugged without voltage!
- Burner controllers are safety devices and may not be opened!

Assembly and electrical installation

CAUTION!



- The controller and the sensor shall not be subject to excessive vibration!

Flame monitoring

The following flame sensors are available for flame monitoring:

Ionization probe, temperature-resistant material. Material like ignition electrode.

Infrared flame detectors IRD 1020.1 with bracket M93

Rev.	Description	Date	E.C.N.	Sign.
C	Added DKG972-N Mod. 33 & 34 - Fixed typing errors on Technical data paragraph	30-10-2012	0066661	MasPia
B	Added functional statements and deleted *Line voltage monitoring* paragraph	03-24-2011	0076345	MasPia
A	First issue.	01-07-2008	0036115	AleCas

Dimensional drawing IRD 1020.1

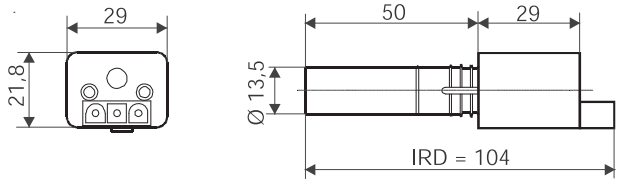

Dimensional drawing bracket M93 to IRD 1020.1

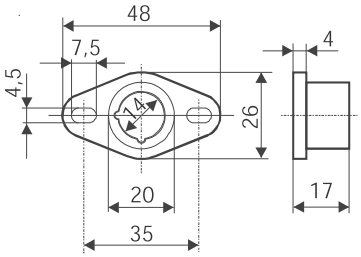

IRD 1020.1 connection

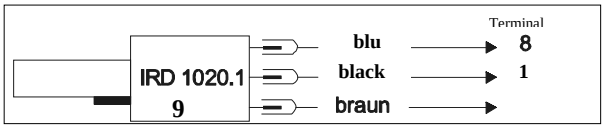

Startup and inspection

Safety note

WARNING!

- The wiring shall be closely inspected prior to startup. Wrong wiring may damage the device and endanger the safety of the system!

Function check

A safety check of the flame monitoring must be performed both at initial startup and during revisions or prolonged shut-down periods of the system.

1. Starting test with closed gas valve
- During blocking operation, the burner control box must switch to lockout after the end of the safety time.

2. Normal start; close gas valve when burner is in operation
- During blocking operation, the burner control box must switch to lockout after a flame failure.
- During repetitive operation, the burner control box must repeat a restart.

Rev.	Description	Date	E.C.N.	Sign.
C	Added DKG972-N Mod. 33 & 34 - Fixed typing errors on Technical data paragraph	30-10-2012	0066661	MasPia
B	Added functional statements and deleted *Line voltage monitoring* paragraph	03-24-2011	0076345	MasPia
A	First issue.	01-07-2008	0036115	AleCas

Lockout conditions

Potential faults

Thanks to the built-in information system, faults can be detected during the start or in operation without a major effort.

The device remains in the lockout and the cause of the fault is indicated until the burner control box is unlocked (fault remedied) again (see also "Locking and unlocking").

Because the lockout is not remedied by pulling the plug from the device (for models with unalterable fault lockout) or by interrupting the line supply, the device switches once more to the lockout position approx. 5 sec. after applying the line voltage and the last lockout is indicated.

Problem	Potential faults
Burner does not start operation	• Thermostat off • Electrical supply line faulty • Line voltage too low Constant voltage on terminal 9
A fault is indicated approx. 5 sec. after voltage release	• Burner control box is not reset from lockout
Controller switches to lockout at the end of pre-ventilation or recycles	• Flame signal (stray light)
Without flame generation controller switches to fault at the end of the safety time or recycles	• Fuel supply or ignition missing
Burner starts, flame is generated, fault lockout after safety time has lapsed or recycles	• No flame signal or flame signal too weak (flame is not stable, poor insulation of the flame sensor, poor ground connection) • Insufficient light on flame sensor • Sensitivity on IRD set too low

Lockout diagnostics

During the start or operation, faults are detected with the built-in information system.

The LED is permanently lit in case of a fault.

Lighting is interrupted approx. every 10 sec. and a blinking code, providing information on the cause of the fault, is emitted.

The following sequence is repeated until the fault has been acknowledged, i.e. the digital gas burner control boxes has been reset.



1) Light on (10 sec)
2) No light
3) Blinking-code
4) No light

Error message	Blinking code	Error cause
Lockout after safety time	! □	No flame detection within safety time
Stray light interference	□ I	Stray light during monitored phase possible defective sensor
Flame failure	I I □	Flame failure during operation
Manual/external lockout (see also 'Locking and unlocking')	□ □ □ □	

Legend:

I = short pulse
□ = long pulse

Repair and disposal



Digital gas burner control boxes may only be repaired by the product manufacturer.



Your warranty becomes void if you open the digital gas burner control boxes.

When taking back the digital gas burner control boxes , the supplier of the heating system guarantees professional disposal or forwarding for inspection to the product manufacturer.

CAUTION!



- Handling the control box during maintenance and service could potentially generate Electrical Discharges dangerous for the electronic device.
- The effects of the operator discharge may be a simple malfunction of the equipment or damage of electronic components.
- The generation of electrostatic charges is especially favoured by the combination of synthetic fabrics and dry atmosphere.
- Suggested to touch the control box only using insulating shields (e.g. antistatic gloves).

Rev.	Description	Date	E.C.N.	Sign.
C	Added DKG972-N Mod. 33 & 34 - Fixed typing errors on Technical data paragraph	30-10-2012	0066661	MasPia
B	Added functional statements and deleted *Line voltage monitoring* paragraph	03-24-2011	0076345	MasPia
A	First issue.	01-07-2008	0036115	AleCas