SICK.COM

DATA SHEET

M40S-60A303AA0

M4000 Advanced Curtain
Safety light curtains

Sensor Intelligence

ПРОМЭЛЕКТРОНИКА / sales@prom-elec.com

Illustration may differ

SAFETY LIGHT CURTAINS

M40S-60A303AA0

ORDERING INFORMATION

Type	part no.
M40S-60A303AA0	1201570

Further device versions and accessories at www.sick.com/M4000_Advanced_Curtain

DETAILED TECHNICAL DATA

FEATURES

System part	Sender
Resolution	30 mm
Scanning range	21 m
Protective field height	300 mm
Synchronization	Optical synchronization

SAFETY-RELATED PARAMETERS

Type	Type 4 (IEC 61496-1)
Safety integrity level	SIL 3 (IEC 61508)
Category	Category 4 (EN ISO 13849)
Performance level	PL e (EN ISO 13849)
PFH_D (mean probability of a dangerous failure per hour)	$28 * 10^{-9}$ (EN ISO 13849)
T_M (mission time)	20 years (EN ISO 13849)
Safe state in the event of a fault	At least one OSSD is in the OFF state.

FUNCTIONS

	Functions	Delivery status
Restart interlock	✓	Internal
External device monitoring (EDM)	✓	Activated
Beam coding	✓	Uncoded
Configurable status output (ADO)	✓	Contamination (OWS)

[1] The muting functions can only be used in combination with the UE403 muting switching amplifier or a suitable safety controller (e.g., Flexi Classic, Flexi Soft).

Sender test	✓	Deactivated
Configurable scanning range	✓	Low scanning range
Safe SICK device communication via EFI	✓	
Differentiation between man and material (muting)	✓ [1]	

[1] The muting functions can only be used in combination with the UE403 muting switching amplifier or a suitable safety controller (e.g., Flexi Classic, Flexi Soft).

FUNCTIONS - FUNCTIONS IN COMBINATION WITH UE403

Concurrence monitoring	✓
Monitoring of total muting time	✓
Sensor gap monitoring	✓
Belt stop	✓
Muting with override	✓
Exit monitoring	✓
End of muting by ESPE	✓

INTERFACES

System connection	
Connection type	Hirschmann male connector M26, 12-pin
Permitted cable length	≤ 50 m [1]
Permitted cross-section	≥ 0 mm²
Configuration method	Via software
Configuration connection	Female connector M8, 4-pin
Display elements	7-segment display, LEDs
Status display	LEDs

[1] Depending on load, power supply and wire cross-section. The technical specifications must be observed.

ELECTRONICS

Protection class	III (IEC 61140)
Supply voltage V_S	24 V DC (19.2 V ... 28.8 V)
Residual ripple	≤ 10 % [1]
Power consumption	≤ 0.3 A

[1] Within the limits of V_S.

MECHANICS

Housing cross-section	52 mm x 55.5 mm
Housing material	Aluminum alloy ALMGSI 0.5
Surface treatment	Powder coated
Front screen material	Polycarbonate, scratch-resistant coating

AMBIENT DATA

Enclosure rating	IP65 (EN 60529)
Ambient operating temperature	–30 °C ... +55 °C
Storage temperature	–30 °C ... +70 °C
Air humidity	15 % ... 95 %, Non-condensing

Vibration resistance	5 g, 10 Hz ... 55 Hz (EN 60068-2-6)
Shock resistance	10 g, 16 ms (EN 60068-2-27)

OTHER INFORMATION

Wave length	850 nm

CERTIFICATES

EU declaration of conformity	✓
UK declaration of conformity	✓
ACMA declaration of conformity	✓
Moroccan declaration of conformity	✓
China RoHS	✓
ULus approval	✓
cUL approval	✓
EC-Type-Examination approval	✓
Information according to Art. 3 of Data Act (Regulation EU 2023/2854)	✓

DIMENSIONAL DRAWING

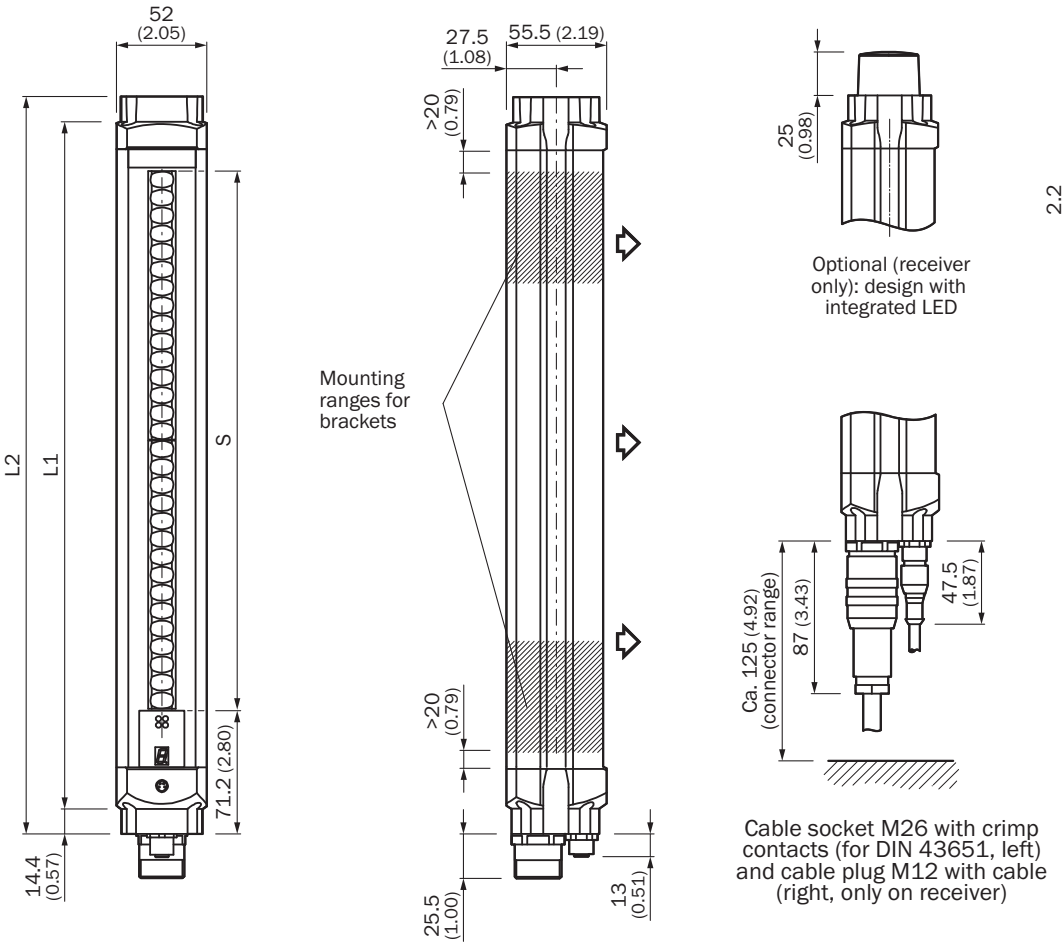

Dimensions in mm (inch)

	L1	L2
300	387	416
450	537	566
600	687	716
750	837	866
900	987	1,016
1,050	1,137	1,166
1,200	1,287	1,316
1,350	1,437	1,466
1,500	1,587	1,616
1,650	1,737	1,766
1,800	1,887	1,916

Further information as well as suitable accessories, example applications and downloads such as CAD dimensional models, operating instructions and software can be found at www.sick.com/1201570

SICK AG
WALDKIRCH
GERMANY
SICK.COM

SICK AT A GLANCE

SICK is a leading global technology company for intelligent sensors and integrated solutions in industrial automation. Our technologies set benchmarks, making your industrial processes more efficient, safer and more sustainable – both in logistics and manufacturing operations.

SICK combines sensor intelligence with industry expertise and certified consulting services. We provide the ideal foundation for scalable as well as tailor-made automation solutions and create added value along the entire value chain. Our close partnerships with our customers are more than just a promise: Together, we optimize productivity, improve quality, protect health and safety, and help build a sustainable future. All with empathy and trust.

Since 1946, we have been developing innovative technologies with passion and a pioneering spirit. With a global network in around 40 countries, SICK has a global presence and is always close by. The company's headquarters are located in Waldkirch near Freiburg, Germany. Our customers benefit from our understanding of both local and global requirements, which enables us to deliver tailor-made solutions

SICK
Sensor Intelligence