SICK.COM

DATA SHEET

M40S-062203AA0

M4000 Advanced
Safety multibeam sensors

Sensor Intelligence

ПРОМЭЛЕКТРОНИКА / sales@prom-elec.com

Illustration may differ

SAFETY MULTIBEAM SENSORS

M40S-062203AA0

ORDERING INFORMATION

Type	part no.
M40S-062203AA0	1200075

Further device versions and accessories at www.sick.com/M4000_Advanced

DETAILED TECHNICAL DATA

FEATURES

Functional principle	Sender/receiver
System part	Sender
Scanning range	0.5 m ... 70 m, configurable
Low scanning range	0.5 m ... 20 m
Great scanning range	9 m ... 70 m
Number of beams	6
Beam separation	220 mm
Response time	10 ms
Synchronization	Optical synchronization

SAFETY-RELATED PARAMETERS

Type	Type 4 (IEC 61496-1)
Safety integrity level	SIL 3 (IEC 61508)
Category	Category 4 (EN ISO 13849)
Performance level	PL e (EN ISO 13849)
PFH_D (mean probability of a dangerous failure per hour)	6.6×10^{-9} (EN ISO 13849)
T_M (mission time)	20 years (EN ISO 13849)
Safe state in the event of a fault	At least one OSSD is in the OFF state.

FUNCTIONS

	Functions	Delivery status
Beam coding	✓	Uncoded
Restart interlock	✓	
External device monitoring (EDM)	✓	

Sender test	✓	Deactivated
Configurable scanning range	✓	
Configurable application diagnostic output	✓	Contamination (OWS)
Safe SICK device communication via EFI	✓	
Differentiation between man and material (muting)	✓	
Type of human-material differentiation	Flexible, configurable 4-signal muting	

INTERFACES

System connection	Hirschmann male connector M26, 12-pin
Permitted cable length	50 m [1]
Permitted cross-section	≥ 0.75 mm²
Configuration connection	Female connector M8, 4-pin
Configuration method	PC with CDS (Configuration and Diagnostic Software)
Display elements	LEDs 7-segment display

[1] Depending on load, power supply and wire cross-section. The technical specifications must be observed.

ELECTRONICS

Protection class	III (IEC 61140)
Supply voltage V_S	24 V DC (19.2 V DC ... 28.8 V DC) [1]
Residual ripple	≤ 10 % [2]
Power consumption	≤ 0.2 A

[1] The external voltage supply must be capable of buffering brief mains voltage failures of 20 ms as specified in EN 60204-1. Suitable power supplies are available as accessories from SICK.

[2] Within the limits of V_S.

MECHANICS

Dimensions	See dimensional drawing
Housing cross-section	52 mm x 55.5 mm
Material	
Housing	Aluminum alloy ALMGSI 0.5, powder coated
Front screen	Polycarbonate, scratch-resistant coating

AMBIENT DATA

Enclosure rating	IP65 (EN 60529)
Ambient operating temperature	–30 °C ... +55 °C
Storage temperature	–30 °C ... +70 °C
Air humidity	15 % ... 95 %, Non-condensing
Vibration resistance	5 g, 10 Hz ... 55 Hz (EN 60068-2-6)
Shock resistance	10 g, 16 ms (EN 60068-2-27)

OTHER INFORMATION

Wave length	850 nm

CERTIFICATES

EU declaration of conformity	✓

UK declaration of conformity	✓
ACMA declaration of conformity	✓
Moroccan declaration of conformity	✓
China RoHS	✓
ULus approval	✓
cUL approval	✓
EC-Type-Examination approval	✓
Information according to Art. 3 of Data Act (Regulation EU 2023/2854)	✓

DIMENSIONAL DRAWING

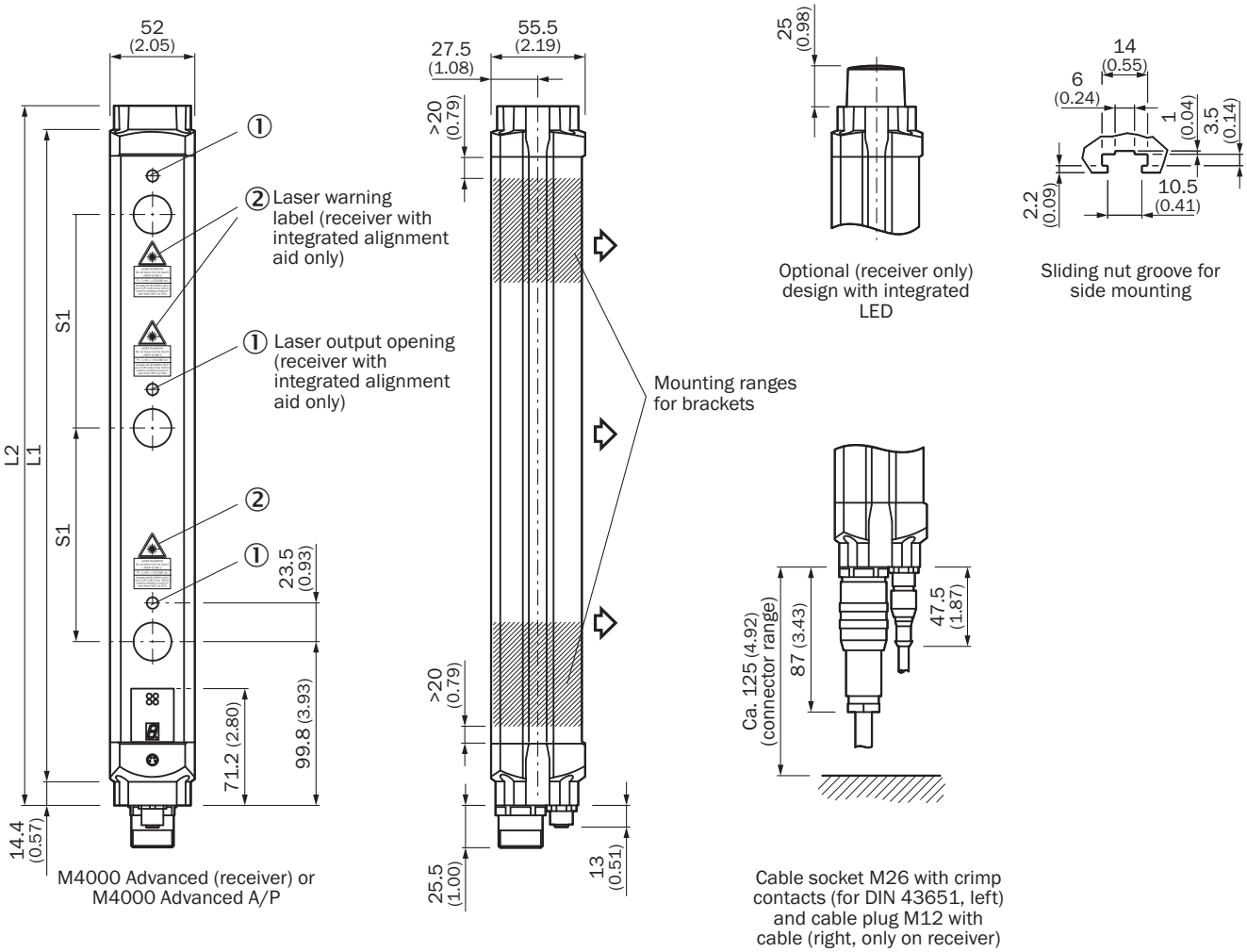

Dimensions in mm (inch)
illustration sender (receiver mirror image)

Number of beams	Beam separation S1	L1	L2
2	500 (19.69)	643 (25.31)	672 (26.46)
	600 (23.62)	743 (29.25)	772 (30.39)
3	220 (8.66)	583 (22.95)	612 (24.09)
	400 (15.75)	943 (37.13)	972 (38.27)
	450 (17.72)	1,043 (41.06)	1,072 (42.20)
4	220 (8.66)	803 (31.61)	832 (32.76)

Number of beams	Beam separation S1	L1	L2
	300 (11.81)	1,043 (41.06)	1,072 (42.20)
5	220 (8.66)	1,023 (40.28)	1,052 (41.42)
6		1,243 (48.94)	1,272 (50.08)
7		1,462 (57.56)	1,491 (58.70)
8		1,682 (66.22)	1,711 (67.36)

Further information as well as suitable accessories, example applications and downloads such as CAD dimensional models, operating instructions and software can be found at www.sick.com/1200075

SICK AG
WALDKIRCH
GERMANY
SICK.COM

SICK AT A GLANCE

SICK is a leading global technology company for intelligent sensors and integrated solutions in industrial automation. Our technologies set benchmarks, making your industrial processes more efficient, safer and more sustainable – both in logistics and manufacturing operations.

SICK combines sensor intelligence with industry expertise and certified consulting services. We provide the ideal foundation for scalable as well as tailor-made automation solutions and create added value along the entire value chain. Our close partnerships with our customers are more than just a promise: Together, we optimize productivity, improve quality, protect health and safety, and help build a sustainable future. All with empathy and trust.

Since 1946, we have been developing innovative technologies with passion and a pioneering spirit. With a global network in around 40 countries, SICK has a global presence and is always close by. The company's headquarters are located in Waldkirch near Freiburg, Germany. Our customers benefit from our understanding of both local and global requirements, which enables us to deliver tailor-made solutions

SICK
Sensor Intelligence