SICK.COM

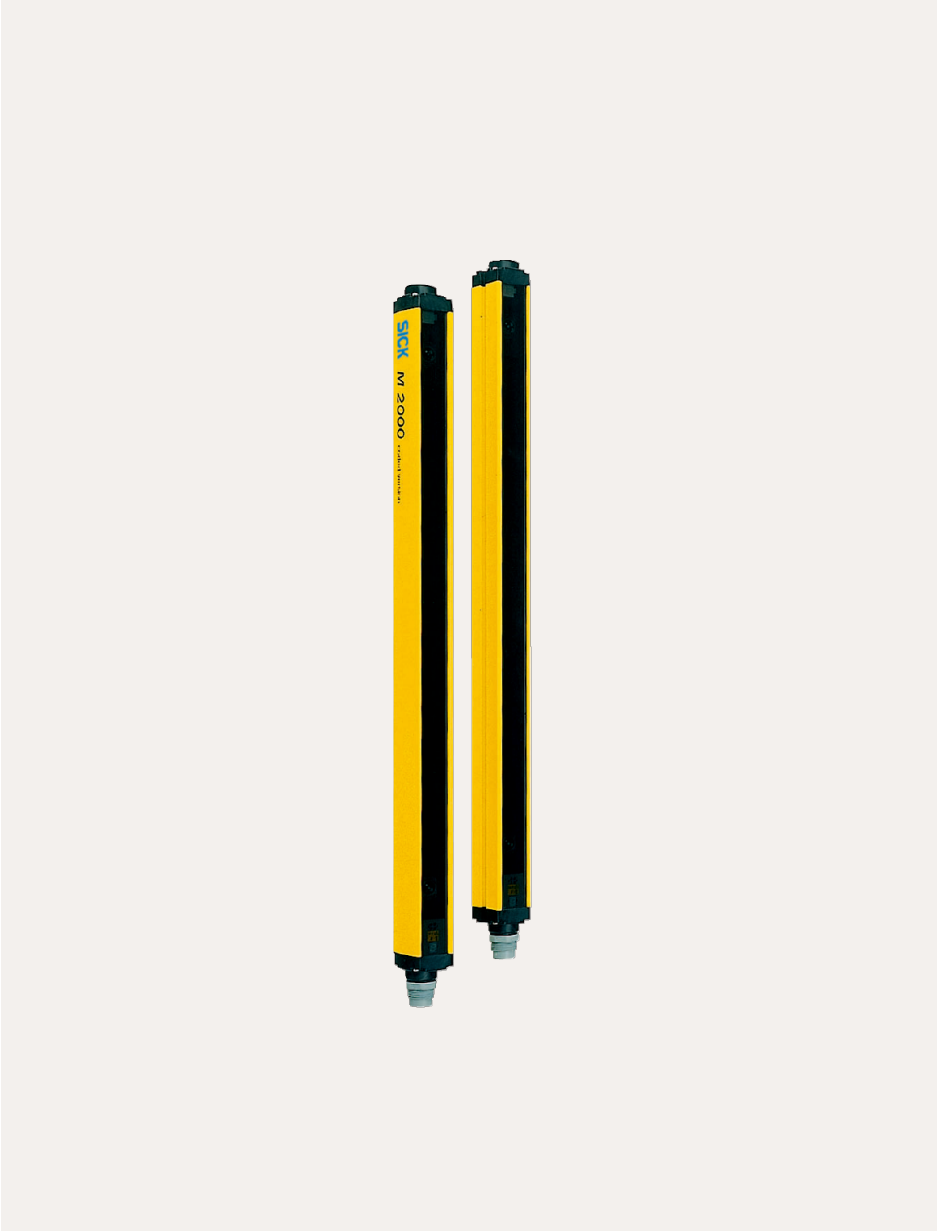

DATA SHEET

M20S-04230A120

M2000 Standard
Safety multibeam sensors

SICK Sensor Intelligence

ПРОМЭЛЕКТРОНИКА / sales@prom-elec.com

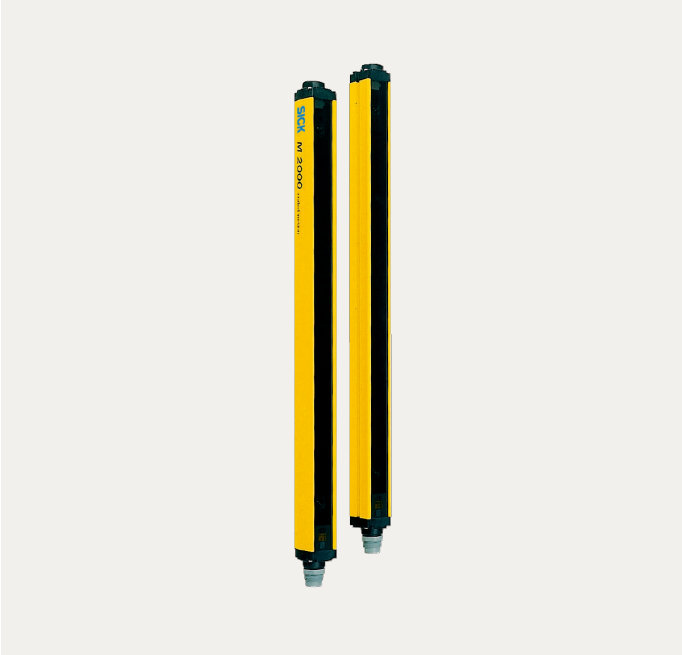

Illustration may differ

SAFETY MULTIBEAM SENSORS

M20S-04230A120

ORDERING INFORMATION

Type	part no.
M20S-04230A120	1018180

Further device versions and accessories at www.sick.com/M2000_Standard

DETAILED TECHNICAL DATA

FEATURES

Scanning range	0 m ... 70 m, configurable
Low scanning range	0 m ... 20 m
Great scanning range	15 m ... 70 m
Number of beams	4
Beam separation or resolution	300 mm
Response time	8 ms
Synchronization	Optical synchronization

SAFETY-RELATED PARAMETERS

Type	Type 2 (IEC 61496-1)
Safety integrity level	SIL 1 (IEC 61508)
Category	Category 2 (EN ISO 13849)
Test rate (internal test)	13 /s (EN ISO 13849) [1]
Maximum demand rate	8 min^{-1} (EN ISO 13849) [2]
Performance level	PL c (EN ISO 13849)
PFH_D (mean probability of a dangerous failure per hour)	6.6×10^{-9} (EN ISO 13849)
T_M (mission time)	20 years (EN ISO 13849)
Safe state in the event of a fault	At least one OSSD is in the OFF state.

[1] Internal test. The test rate may not be exceeded if an external test is performed.

[2] Between two requirements on a safety-related response of the device, at least 100 internal or external tests must be carried out.

FUNCTIONS

	Functions	Delivery status
Beam coding	✓	Uncoded

Configurable scanning range	✓

INTERFACES

System connection	
Permitted cable length	60 m [1]
Permitted cross-section	≥ 1 mm²
Configuration method	Hard wired
Display elements	LEDs 7-segment display

[1] Depending on load, power supply and wire cross-section. The technical specifications must be observed.

ELECTRONICS

Protection class	III (IEC 61140)
Supply voltage V_S	24 V DC (19.2 V DC ... 28.8 V DC) [1]
Power consumption	≤ 3.7 W (DC)

[1] The external voltage supply must be capable of buffering brief mains voltage failures of 20 ms as specified in EN 60204-1. Suitable power supplies are available as accessories from SICK.

MECHANICS

Dimensions	See dimensional drawing
Housing cross-section	48 mm x 40 mm

AMBIENT DATA

Enclosure rating	IP65 (EN 60529)
Ambient operating temperature	0 °C ... +55 °C
Storage temperature	–25 °C ... +70 °C
Air humidity	15 % ... 95 %, Non-condensing
Vibration resistance	5 g/10 Hz ... 55 Hz (IEC 68-2-6)
Shock resistance	10 g/16 ms (IEC 68-2-29)

OTHER INFORMATION

Wave length	950 nm

CERTIFICATES

ACMA declaration of conformity	✓
China RoHS	✓
ULus approval	✓
cUL approval	✓

DIMENSIONAL DRAWING

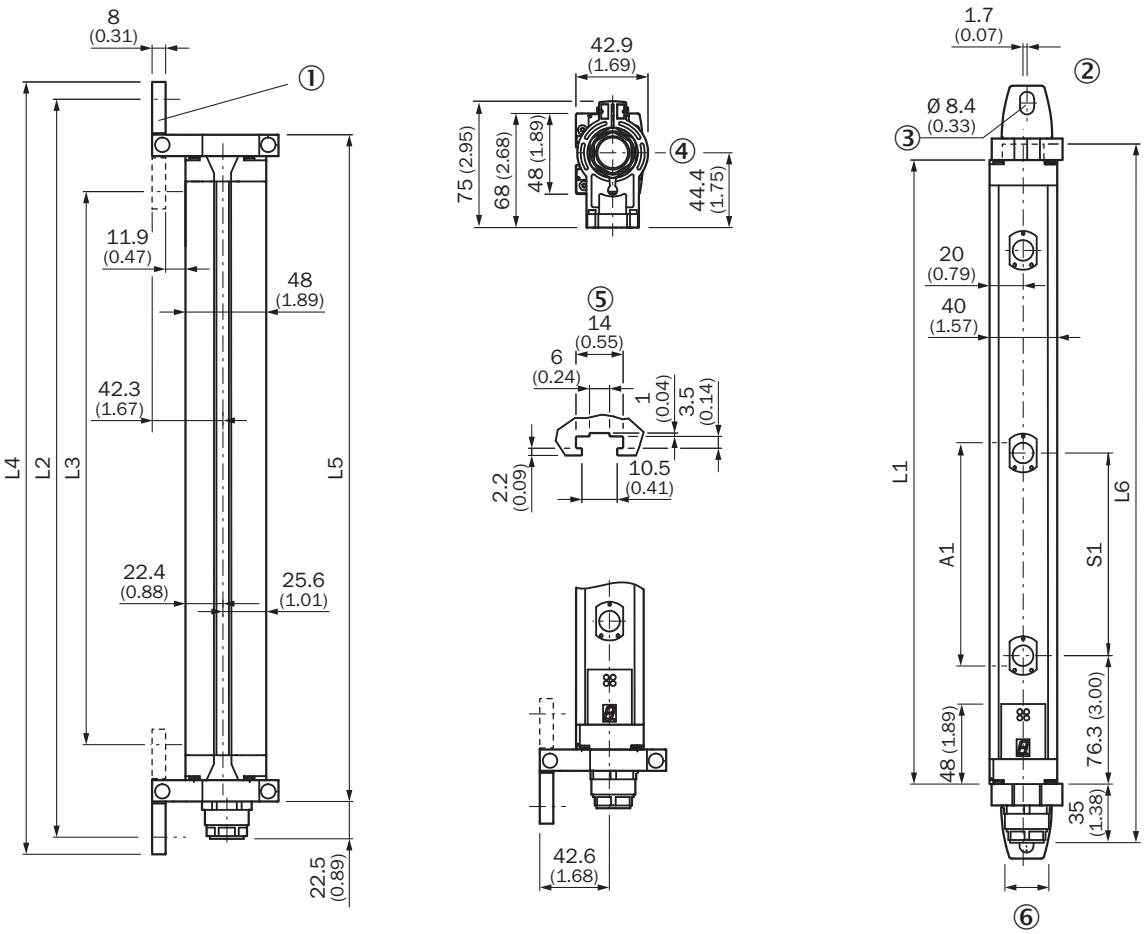

Dimensions in mm (inch)

			L1	L2	L3	L4	L5	L6
2	500	-	630	697	588	718	655	675
3	400	-	931	998	888	1,019	956	976
4	300	-	1,031	1,098	989	1,119	1,056	1,076
6	-	170	916	983	874	1,004	941	960
7	-	170	1,073	1,140	1,031	1,161	1,098	1,118
8	-	116	851	919	809	939	877	896
8	-	170	1,231	1,298	1,189	1,319	1,256	1,275
9	-	170	1,388	1,455	1,346	1,476	1,413	1,433

CONNECTION DIAGRAM M2000 STANDARD WITH 7-PIN SYSTEM CONNECTION FOR UE48-2OS WITH RESTART INTERLOCK AND EXTERNAL DEVICE MONITORING

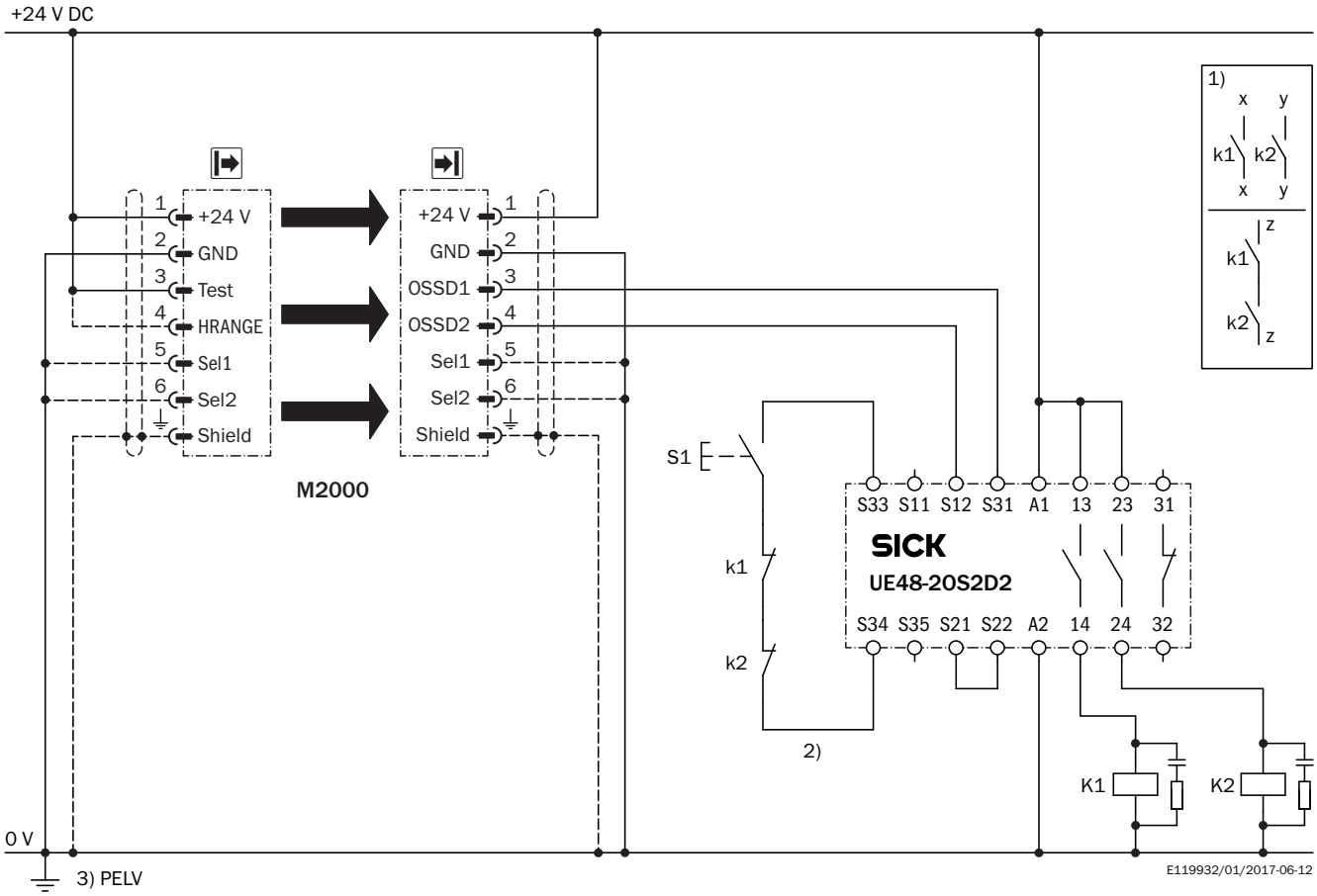

Further information as well as suitable accessories, example applications and downloads such as CAD dimensional models, operating instructions and software can be found at www.sick.com/1018180

SICK AG
WALDKIRCH
GERMANY
SICK.COM

SICK AT A GLANCE

SICK is a leading global technology company for intelligent sensors and integrated solutions in industrial automation. Our technologies set benchmarks, making your industrial processes more efficient, safer and more sustainable – both in logistics and manufacturing operations.

SICK combines sensor intelligence with industry expertise and certified consulting services. We provide the ideal foundation for scalable as well as tailor-made automation solutions and create added value along the entire value chain. Our close partnerships with our customers are more than just a promise: Together, we optimize productivity, improve quality, protect health and safety, and help build a sustainable future. All with empathy and trust.

Since 1946, we have been developing innovative technologies with passion and a pioneering spirit. With a global network in around 40 countries, SICK has a global presence and is always close by. The company's headquarters are located in Waldkirch near Freiburg, Germany. Our customers benefit from our understanding of both local and global requirements, which enables us to deliver tailor-made solutions

SICK
Sensor Intelligence