SICK.COM

DATA SHEET

L27S-3D3730

L27
Safety single-beam sensors

SICK Sensor Intelligence

ПРОМЭЛЕКТРОНИКА / sales@prom-elec.com

Illustration may differ

SAFETY SINGLE-BEAM SENSORS

L27S-3D3730

ORDERING INFORMATION

Type	part no.
L27S-3D3730	2043859

Further device versions and accessories at www.sick.com/L27

DETAILED TECHNICAL DATA

FEATURES

Light source	LED
Type of light	Visible red light
Scanning range	35 m
Number of beams	1
Response time	0.68 ms
Response time	0.68 ms + Test device response time

SAFETY-RELATED PARAMETERS

Type	Type 2 (IEC 61496-1) [1]
Safety integrity level	SIL 1 (IEC 61508) [1]
Category	Category 2 (EN ISO 13849) [1]
Test rate (external test)	100 /s (EN ISO 13849) [2]
Maximum demand rate	60 min^{-1} (EN ISO 13849) [3]
Performance level	PL c (EN ISO 13849) [1]
PFH_D (mean probability of a dangerous failure per hour)	1.0×10^{-6} (EN ISO 13849) [1]
T_M (mission time)	20 years (EN ISO 13849)

[1] Only in combination with an appropriate test device, e.g., Flexi Classic or Flexi Soft.

[2] The test rate shall not be exceeded.

[3] Between two requirements on a safety-related response of the device, at least 100 internal or external tests must be carried out.

INTERFACES

Connection type	Q7 male connector, 7-pin, straight

Display elements	LED

ELECTRONICS

Protection class	II (IEC 61140)
Supply voltage V_S	24 V DC (19.2 V DC ... 28.8 V DC)
Power consumption	≤ 35 mA
Power consumption (with heating)	≤ 50 mA
Test input voltage	> 15 V or not connected (Sender on) [1] < 5 V (Sender off) [1]
Test input response time	≤ 2.6 ms [2]

[1] The test input has a pull-up resistor to activate the sender (sender on) even when not connected. Therefore, an active-switched LOW signal is required to activate the cyclic test with test gap (sender off).

[2] Signal propagation time for resistive load, for test signal application (sender) and output signal reaction (receiver).

MECHANICS

Design	Rectangular
Dimensions (W x H x D)	24.6 mm x 92.8 mm x 54 mm
Housing material	ABS (plastic)
Weight	+ 100 g

AMBIENT DATA

Enclosure rating	IP67 (EN 60529)
Ambient operating temperature	–40 °C ... +60 °C
Storage temperature	–40 °C ... +75 °C
Air humidity	15 % ... 95 %, Non-condensing
Vibration resistance	5 g, 10 Hz ... 55 Hz (IEC 60068-2-6)
Shock resistance	10 g, 16 ms (IEC 60068-2-27)

OTHER INFORMATION

Light source	LED
Type of light	Visible red light
Wave length	660 nm
Light spot diameter (distance)	200 mm (10 m)
Aperture angle/receiving angle	± 5° / ± 5°

DIMENSIONAL DRAWING

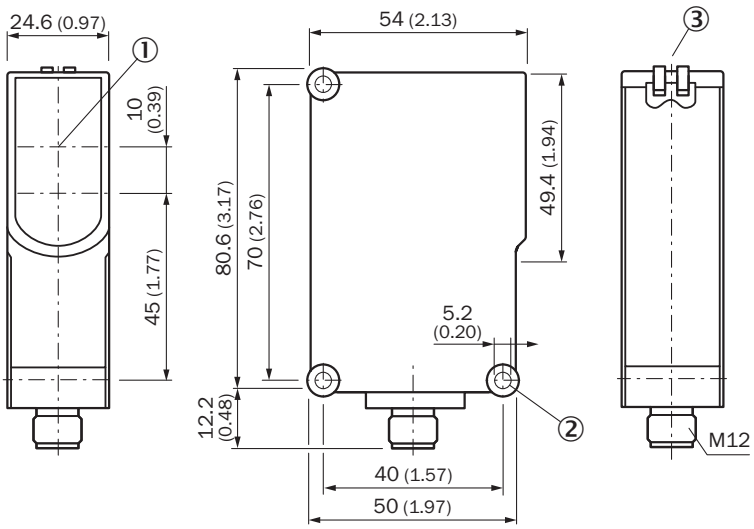

Dimensions in mm (inch)

CONNECTION DIAGRAM 3 X L27 WITH A FLEXI CLASSIC UE410-8DI INPUT EXPANSION UNIT

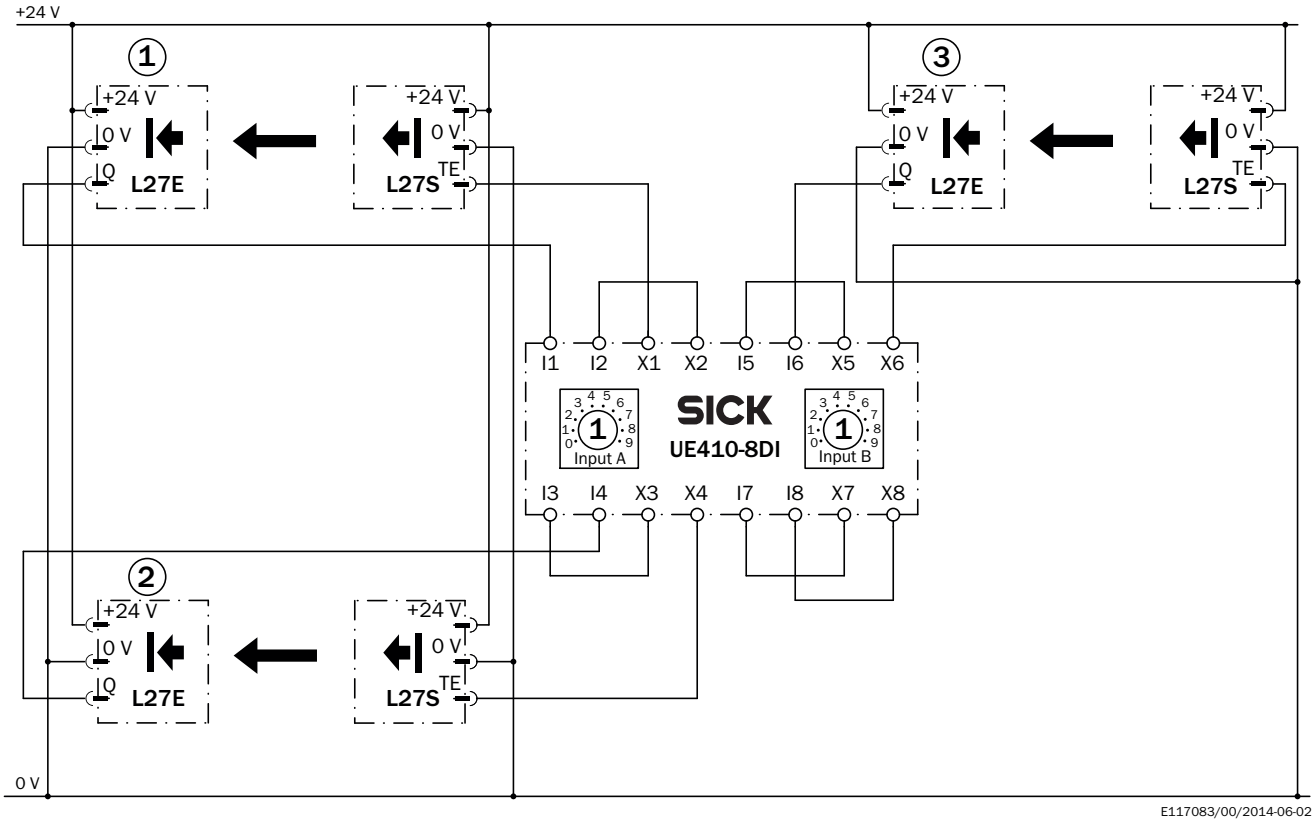

Further information as well as suitable accessories, example applications and downloads such as CAD dimensional models, operating instructions and software can be found at www.sick.com/2043859

SICK AG
WALDKIRCH
GERMANY
SICK.COM

SICK AT A GLANCE

SICK is a leading global technology company for intelligent sensors and integrated solutions in industrial automation. Our technologies set benchmarks, making your industrial processes more efficient, safer and more sustainable – both in logistics and manufacturing operations.

SICK combines sensor intelligence with industry expertise and certified consulting services. We provide the ideal foundation for scalable as well as tailor-made automation solutions and create added value along the entire value chain. Our close partnerships with our customers are more than just a promise: Together, we optimize productivity, improve quality, protect health and safety, and help build a sustainable future. All with empathy and trust.

Since 1946, we have been developing innovative technologies with passion and a pioneering spirit. With a global network in around 40 countries, SICK has a global presence and is always close by. The company's headquarters are located in Waldkirch near Freiburg, Germany. Our customers benefit from our understanding of both local and global requirements, which enables us to deliver tailor-made solutions

SICK
Sensor Intelligence