SICK.COM

DATA SHEET

L21S-21KA1A

L21
Safety single-beam sensors

SICK Sensor Intelligence

ПРОМЭЛЕКТРОНИКА / sales@prom-elec.com

SAFETY SINGLE-BEAM SENSORS

L21S-21KA1A

ORDERING INFORMATION

Type	part no.
L21S-21KA1A	6034872

Further device versions and accessories at www.sick.com/L21

DETAILED TECHNICAL DATA

FEATURES

Light source	LED
Type of light	Visible red light
Scanning range	16 m
Number of beams	1
Optical axis	Axial
Response time	0.2 ms
Response time	0.2 ms + Test device response time

SAFETY-RELATED PARAMETERS

Type	Type 2 (IEC 61496-1) [1]
Safety integrity level	SIL 1 (IEC 61508) [1]
Category	Category 2 (EN ISO 13849) [1]
Test rate (external test)	100 /s (EN ISO 13849) [2]
Maximum demand rate	60 min^{-1} (EN ISO 13849) [3]
Performance level	PL c (EN ISO 13849) [1]
PFH_D (mean probability of a dangerous failure per hour)	1.0×10^{-6} (EN ISO 13849) [1]
T_M (mission time)	20 years (EN ISO 13849)

[1] Only in combination with an appropriate test device, e.g., Flexi Classic or Flexi Soft.

[2] The test rate shall not be exceeded.

[3] Between two requirements on a safety-related response of the device, at least 100 internal or external tests must be carried out.

INTERFACES

Connection type	Male connector M12, 4-pin, straight

ELECTRONICS

Protection class	III (IEC 61140)
Supply voltage V_S	24 V DC (19.2 V DC ... 28.8 V DC)
Power consumption	≤ 20 mA

MECHANICS

Design	Cylindrical
Dimensions (diameter x length)	M18 x 97.7 mm
Housing material	Plastic PBT
Front screen material	Glass
Weight	30 g

AMBIENT DATA

Enclosure rating	IP67 (EN 60529)
Ambient operating temperature	–40 °C ... +55 °C
Storage temperature	–40 °C ... +75 °C
Air humidity	15 % ... 95 %, Non-condensing
Vibration resistance	5 g, 10 Hz ... 55 Hz (IEC 60068-2-6)
Shock resistance	10 g, 16 ms (IEC 60068-2-27)

OTHER INFORMATION

Light source	LED
Type of light	Visible red light
Wave length	660 nm
Aperture angle/receiving angle	± 5° / ± 5°

CERTIFICATES

EU declaration of conformity	✓
UK declaration of conformity	✓
ACMA declaration of conformity	✓
Moroccan declaration of conformity	✓
China RoHS	✓
cTUVus certificate	✓
EC-Type-Examination approval	✓

DIMENSIONAL DRAWING M18, AXIAL, STRAIGHT

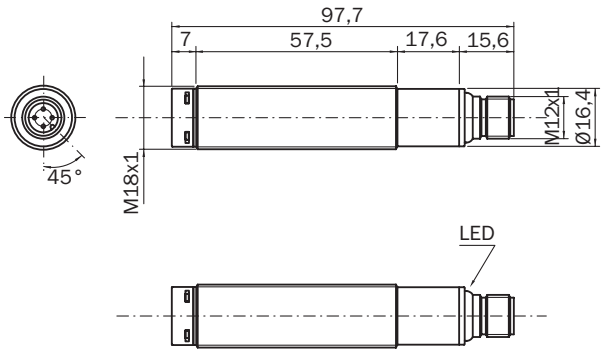

Dimensions in mm (inch)

Further information as well as suitable accessories, example applications and downloads such as CAD dimensional models, operating instructions and software can be found at www.sick.com/6034872

SICK AG
WALDKIRCH
GERMANY
SICK.COM

SICK AT A GLANCE

SICK is a leading global technology company for intelligent sensors and integrated solutions in industrial automation. Our technologies set benchmarks, making your industrial processes more efficient, safer and more sustainable – both in logistics and manufacturing operations.

SICK combines sensor intelligence with industry expertise and certified consulting services. We provide the ideal foundation for scalable as well as tailor-made automation solutions and create added value along the entire value chain. Our close partnerships with our customers are more than just a promise: Together, we optimize productivity, improve quality, protect health and safety, and help build a sustainable future. All with empathy and trust.

Since 1946, we have been developing innovative technologies with passion and a pioneering spirit. With a global network in around 40 countries, SICK has a global presence and is always close by. The company's headquarters are located in Waldkirch near Freiburg, Germany. Our customers benefit from our understanding of both local and global requirements, which enables us to deliver tailor-made solutions

SICK
Sensor Intelligence