SICK.COM

DATA SHEET

C4C-SB13530A10000

deTec
Safety light curtains

Sensor Intelligence

ПРОМЭЛЕКТРОНИКА / sales@prom-elec.com

Illustration may differ

SAFETY LIGHT CURTAINS

C4C-SB13530A10000

ORDERING INFORMATION

Type	part no.
C4C-SB13530A10000	1219566

Further device versions and accessories at www.sick.com/deTec

DETAILED TECHNICAL DATA

FEATURES

Product version	deTec4 Core IP69K
Application	Areas with special hygiene requirements
System part	Sender
Compatible receiver	1219567
Resolution	30 mm
Scanning range	12.5 m
Protective field height	1,350 mm
No blind zones	Yes
Synchronization	Optical synchronization
Items supplied	Sender in IP69K protective housing with connecting cable, 15 m

SAFETY-RELATED PARAMETERS

Type	Type 4 (IEC 61496-1)
Safety integrity level	SIL 3 (IEC 61508)
Category	Category 4 (ISO 13849-1)
Performance level	PL e (ISO 13849-1)
PFH_D (mean probability of a dangerous failure per hour)	3.7×10^{-9}
T_M (mission time)	20 years (ISO 13849-1)
Safe state in the event of a fault	At least one OSSD is in the OFF state.

INTERFACES

System connection	Connecting cable, 15 m, flying leads, 5-wire
Length of cable	15 m
Cable diameter	5 mm
Cable material	PUR, halogen-free
Conductor cross section	0.34 mm²

Display elements	LEDs

ELECTRONICS

Protection class	III (IEC 61140)
Supply voltage V_s	24 V DC (19.2 V ... 28.8 V)
Ripple	≤ 10 %
Power consumption typical	1.15 W (DC)

MECHANICS

Dimensions	See dimensional drawing
Material	
Protective housing	PMMA
End caps	Stainless steel 1.4404
Cable glands	Stainless steel 1.4404 including silicone seal
Compensating element (membrane)	PA 6

AMBIENT DATA

Enclosure rating	IP65 (IEC 60529) IP66 (IEC 60529) IP67 (IEC 60529) IP69K (ISO 20653)
Ambient operating temperature	–30 °C ... +55 °C
Storage temperature	–30 °C ... +70 °C
Air humidity	15 % ... 95 %, Non-condensing
Vibration resistance	5 ... 150 Hz, 3,5 mm / 1 g (EN 60068-2-6)
Shock resistance	15 g / 6 ms (EN 60068-2-27)
Class	3M4 (IEC TR 60721-4-3)

OTHER INFORMATION

Wave length	850 nm
Type of light	Near-infrared (NIR), invisible

CERTIFICATES

EU declaration of conformity	✓
UK declaration of conformity	✓
ACMA declaration of conformity	✓
Moroccan declaration of conformity	✓
China RoHS	✓
ECOLAB certificate	✓
ULus approval	✓
cUL approval	✓
diversey certificate	✓
Taiwan OSHA certificate	✓
Japan Press Safety certificate	✓
EC-Type-Examination approval	✓
China GB/T certificate	✓

Information according to Art. 3 of Data Act (Regulation EU 2023/2854)	✓

DIMENSIONAL DRAWING

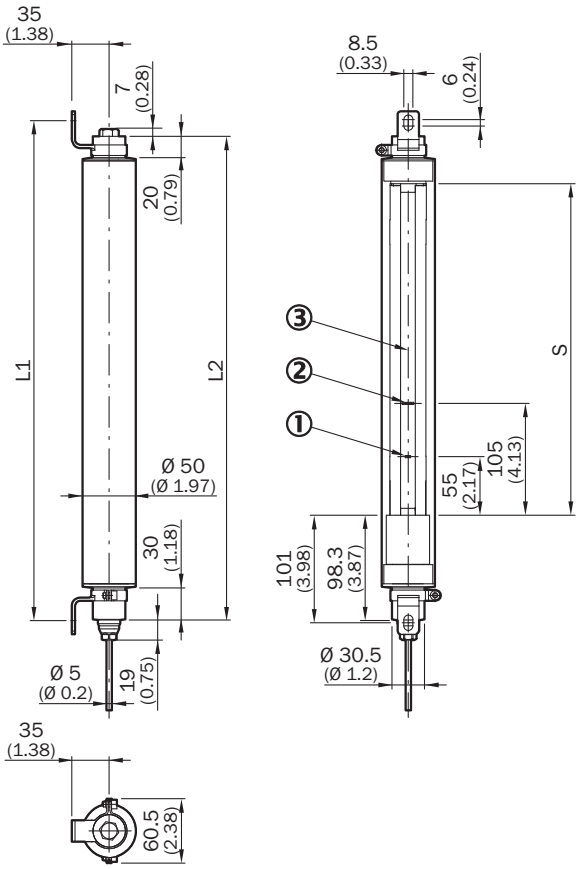

Dimensions in mm (inch)
① Operating indicator
② Alignment indicator
③ Optical axis

	S	L1	L2
300	311	469	454
450	461	619	604
600	611	769	754
750	761	919	904
900	911	1,069	1,054
1,050	1,061	1,219	1,204
1,200	1,211	1,369	1,354
1,350	1,361	1,519	1,504
1,500	1,511	1,669	1,654
1,650	1,661	1,819	1,804
1,800	1,811	1,969	1,954

DETEC4 CORE IP69K SAFETY LIGHT CURTAIN TO RLY3-OSSD2 SAFETY RELAY

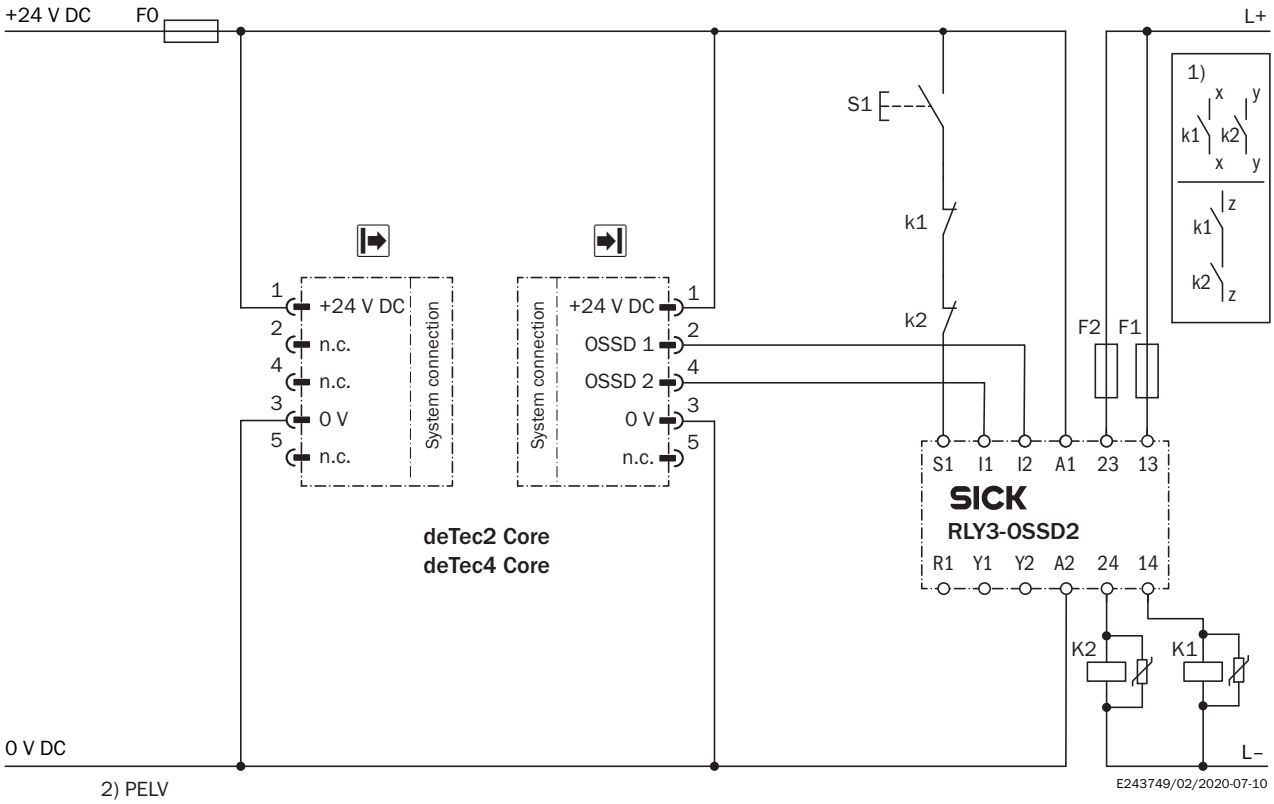

Task
Connection of a deTec4 Core IP69K or deTec2 Core IP69K safety light curtain to RLY3-OSSD2.
Operating mode: with restart interlock and external device monitoring.

Function
When the protective field is clear, the OSSD1 and OSSD2 outputs carry voltage. The system can be switched on when K1 and K2 are in a fault-free de-energized position. The RLY3-OSSD2 is switched on by pressing S1 (pushbutton is pressed and released). The outputs (contacts 13-14 and 23-24) switch the K1 and K2 contactors on. When the protective field is interrupted, the OSSD1 and OSSD2 outputs switch the RLY3-OSSD2 off. Contactors K1 and K2 are switched off.

Fault analysis
Cross-circuits and short-circuits of the OSSDs are recognized and lead to the locking status (lock-out). A malfunction with one of the K1 or K2 contactors is detected. The switch-off function is retained. In the event of manipulation (e.g., jamming) of the S1 pushbutton, the RLY3-OSSD2 will not re-enable the output current circuits.

Comments
[1] Output circuits: These contacts must be incorporated into the control such that the dangerous state is brought to an end if the output circuit is open. For categories 4 and 3, they must be incorporated on dual-channels (x, y paths). Type 2 devices are suitable for use up to PL c. Single-channel incorporation into the control (z path) is only possible with a singlechannel control and taking the risk analysis into account.
[2] SELV/PELV safety extra-low voltage.

Connection	Color-coded connecting cable	Sender	Receiver
1	Brown	+24 V DC	+24 V DC
2	White	Reserved	OSSD 1
3	Blue	0 V DC	0 V DC
4	Black	Reserved	OSSD 2
5	Gray	-	-

Further information as well as suitable accessories, example applications and downloads such as CAD dimensional models, operating instructions and software can be found at www.sick.com/1219566

SICK AG
WALDKIRCH
GERMANY
SICK.COM

SICK AT A GLANCE

SICK is a leading global technology company for intelligent sensors and integrated solutions in industrial automation. Our technologies set benchmarks, making your industrial processes more efficient, safer and more sustainable – both in logistics and manufacturing operations.

SICK combines sensor intelligence with industry expertise and certified consulting services. We provide the ideal foundation for scalable as well as tailor-made automation solutions and create added value along the entire value chain. Our close partnerships with our customers are more than just a promise: Together, we optimize productivity, improve quality, protect health and safety, and help build a sustainable future. All with empathy and trust.

Since 1946, we have been developing innovative technologies with passion and a pioneering spirit. With a global network in around 40 countries, SICK has a global presence and is always close by. The company's headquarters are located in Waldkirch near Freiburg, Germany. Our customers benefit from our understanding of both local and global requirements, which enables us to deliver tailor-made solutions

SICK
Sensor Intelligence