SICK.COM

DATA SHEET

# C46S-0303CT500

C4000 Advanced
Safety light curtains

SICK Sensor Intelligence

ПРОМЭЛЕКТРОНИКА / sales@prom-elec.com

Illustration may differ

## SAFETY LIGHT CURTAINS

# C46S-0303CT500

### ORDERING INFORMATION

| Type | part no. |
|---|---|
| C46S-0303CT500 | 1028903 |

Further device versions and accessories at www.sick.com/C4000_Advanced

## DETAILED TECHNICAL DATA

### FEATURES

| | |
|---|---|
| Application | Normal industrial environment |
| System part | Sender |
| Resolution | 30 mm |
| Scanning range | 21 m |
| Protective field height | 300 mm |
| Synchronization | Optical synchronization |

### SAFETY-RELATED PARAMETERS

| | |
|---|---|
| Type | Type 4 (IEC 61496-1) |
| Safety integrity level | SIL 3 (IEC 61508) |
| Category | Category 4 (EN ISO 13849) |
| Performance level | PL e (EN ISO 13849) |
| $PFH_D$ (mean probability of a dangerous failure per hour) Cascade with one guest | $43 * 10^{-9}$ |
| $T_M$ (mission time) | 20 years (EN ISO 13849) |

### FUNCTIONS

| | Functions | Delivery status |
|---|---|---|
| Protective operation | ✓ | |
| Restart interlock | ✓ [1] | |
| External device monitoring (EDM) | [1] | |
| Beam coding | ✓ [1] | Uncoded |

[1] In conjunction with host device.

| | | |
|---|---|---|
| Configurable scanning range | ✓ [1] | 0 m ... 6 m |
| Fixed blanking | ✓ | Deactivated |
| Floating blanking | ✓ | Deactivated |
| Safe SICK device communication via EFI | ✓ | |

[1] In conjunction with host device.

## FUNCTIONS IN COMBINATION WITH UE402

| | |
|---|---|
| Bypass | ✓ |
| Operating mode switching | ✓ |
| PSDI mode | ✓ |

## INTERFACES

| | |
|---|---|
| System connection | Fixed connection cable 320 mm with male connector M12, 8-pin |
| Direction of cable connection | Angled |
| Conductor cross section | 0.25 mm² |
| Permitted cable length | 3 m [1] |
| Display elements | 7-segment display |

[1] Between host and guest.

## ELECTRONICS

| | |
|---|---|
| Protection class | III (IEC 61140) |
| Supply voltage $V_S$ | 24 V DC (19.2 V ... 28.8 V) [1] |
| Residual ripple | ≤ 10 % [2] |

[1] Voltage supply via host device.

[2] Within the limits of $V_S$.

## MECHANICS

| | |
|---|---|
| Dimensions | See dimensional drawing |
| Housing cross-section | 48 mm x 40 mm |
| Housing material | Aluminum extruded profile |
| Weight | 820 g |

## AMBIENT DATA

| | |
|---|---|
| Enclosure rating | IP65 (EN 60529) |
| Ambient operating temperature | 0 °C ... +55 °C |
| Storage temperature | –25 °C ... +70 °C |
| Air humidity | 15 % ... 95 %, Non-condensing |
| Vibration resistance | 5 g, 10 Hz ... 55 Hz (EN 60068-2-6) |
| Shock resistance | 10 g, 16 ms (EN 60068-2-27) |

## OTHER INFORMATION

| | |
|---|---|
| Wave length | 850 nm |

## CERTIFICATES

| | |
|---|---|
| EU declaration of conformity | ✓ |
| UK declaration of conformity | ✓ |
| ACMA declaration of conformity | ✓ |
| Moroccan declaration of conformity | ✓ |
| China RoHS | ✓ |
| ULus approval | ✓ |
| cUL approval | ✓ |
| EC-Type-Examination approval | ✓ |
| China GB certificate | ✓ |
| Information according to Art. 3 of Data Act (Regulation EU 2023/2854) | ✓ |

**DIMENSIONAL DRAWING**

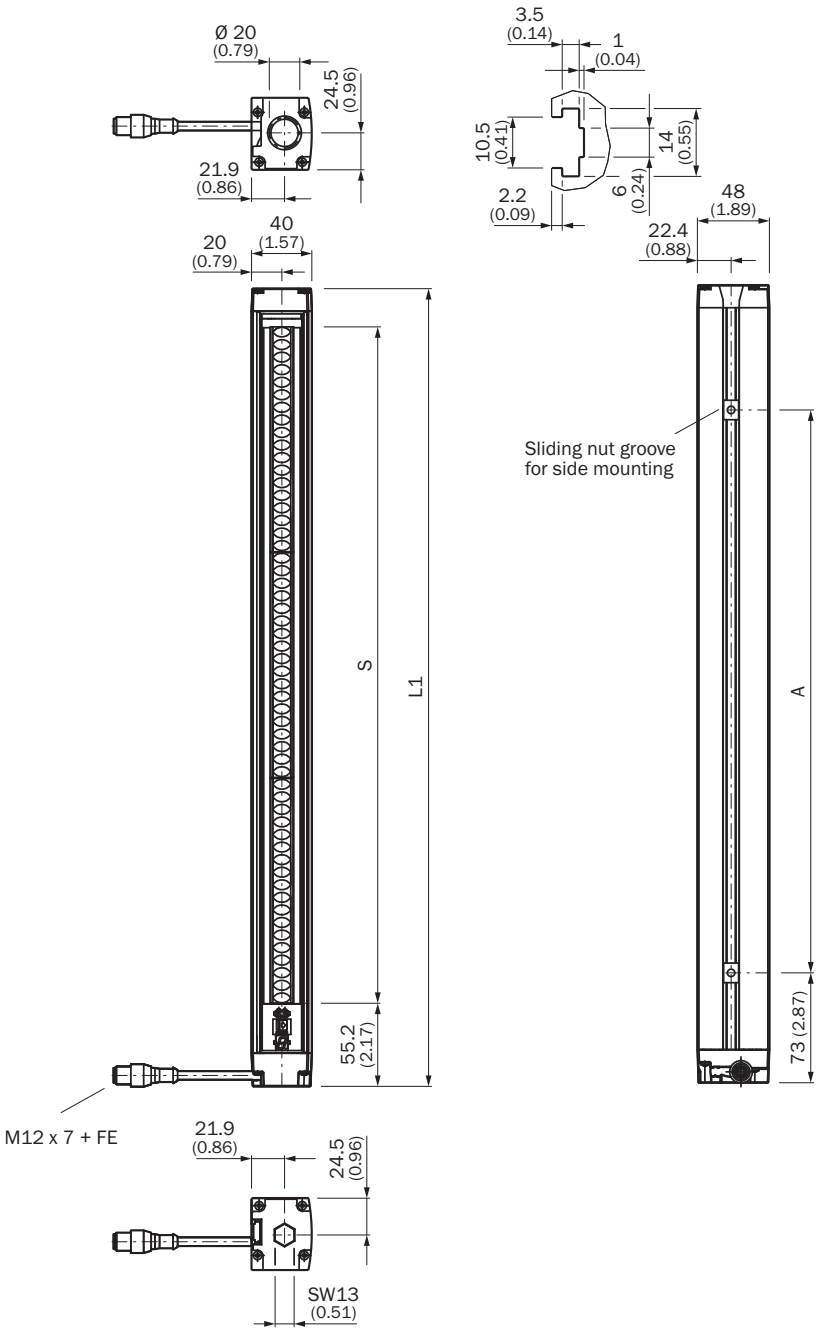


Dimensions in mm (inch)
illustration sender (receiver mirror image)

| Protective field height S | L | A |
|---|---|---|
| 150 | 220 | 76 |
| 300 | 380 | 224 |
| 450 | 530 | 374 |
| 600 | 680 | 524 |
| 750 | 830 | 674 |
| 900 | 981 | 825 |
| 1.050 | 1.131 | 975 |
| 1.200 | 1.281 | 1.125 |
| 1.350 | 1.432 | 1.275 |

| Protective field height S | L | A |
|---|---|---|
| 1.500 | 1.583 | 1.427 |
| 1.650 | 1.733 | 1.504 |
| 1.800 | 1.884 | 1.728 |

Further information as well as suitable accessories, example applications and downloads such as CAD dimensional models, operating instructions and software can be found at www.sick.com/1028903

SICK AG
WALDKIRCH
GERMANY
SICK.COM

# SICK AT A GLANCE

SICK is a leading global technology company for intelligent sensors and integrated solutions in industrial automation. Our technologies set benchmarks, making your industrial processes more efficient, safer and more sustainable – both in logistics and manufacturing operations.

SICK combines sensor intelligence with industry expertise and certified consulting services. We provide the ideal foundation for scalable as well as tailor-made automation solutions and create added value along the entire value chain. Our close partnerships with our customers are more than just a promise: Together, we optimize productivity, improve quality, protect health and safety, and help build a sustainable future. All with empathy and trust.

Since 1946, we have been developing innovative technologies with passion and a pioneering spirit. With a global network in around 40 countries, SICK has a global presence and is always close by. The company's headquarters are located in Waldkirch near Freiburg, Germany. Our customers benefit from our understanding of both local and global requirements, which enables us to deliver tailor-made solutions

SICK
Sensor Intelligence