SICK.COM

DATA SHEET

C46S-0303CT400

C4000 Advanced
Safety light curtains

SICK Sensor Intelligence

ПРОМЭЛЕКТРОНИКА / sales@prom-elec.com

Illustration may differ

SAFETY LIGHT CURTAINS

C46S-0303CT400

ORDERING INFORMATION

Type	part no.
C46S-0303CT400	1028881

Further device versions and accessories at www.sick.com/C4000_Advanced

DETAILED TECHNICAL DATA

FEATURES

Application	Normal industrial environment
System part	Sender
Resolution	30 mm
Scanning range	21 m
Protective field height	300 mm
Synchronization	Optical synchronization

SAFETY-RELATED PARAMETERS

Type	Type 4 (IEC 61496-1)
Safety integrity level	SIL 3 (IEC 61508)
Category	Category 4 (EN ISO 13849)
Performance level	PL e (EN ISO 13849)
PFH_D (mean probability of a dangerous failure per hour) Cascade with one guest	$43 * 10^{-9}$
T_M (mission time)	20 years (EN ISO 13849)

FUNCTIONS

	Functions	Delivery status
Protective operation	✓	
Restart interlock	✓ [1]	
External device monitoring (EDM)	[1]	
Beam coding	✓ [1]	Uncoded

[1] In conjunction with host device.

Configurable scanning range	✓ [1]	0 m ... 6 m
Fixed blanking	✓	Deactivated
Floating blanking	✓	Deactivated
Safe SICK device communication via EFI	✓	

[1] In conjunction with host device.

FUNCTIONS IN COMBINATION WITH UE402

Bypass	✓
Operating mode switching	✓
PSDI mode	✓

INTERFACES

System connection	Fixed connection cable 320 mm with male connector M12, 8-pin
Direction of cable connection	Straight
Conductor cross section	0.25 mm²
Permitted cable length	3 m [1]
Display elements	7-segment display

[1] Between host and guest.

ELECTRONICS

Protection class	III (IEC 61140)
Supply voltage V_S	24 V DC (19.2 V ... 28.8 V) [1]
Residual ripple	≤ 10 % [2]

[1] Voltage supply via host device.

[2] Within the limits of V_S.

MECHANICS

Dimensions	See dimensional drawing
Housing cross-section	48 mm x 40 mm
Housing material	Aluminum extruded profile
Weight	820 g

AMBIENT DATA

Enclosure rating	IP65 (EN 60529)
Ambient operating temperature	0 °C ... +55 °C
Storage temperature	–25 °C ... +70 °C
Air humidity	15 % ... 95 %, Non-condensing
Vibration resistance	5 g, 10 Hz ... 55 Hz (EN 60068-2-6)
Shock resistance	10 g, 16 ms (EN 60068-2-27)

OTHER INFORMATION

Wave length	850 nm

CERTIFICATES

EU declaration of conformity	✓
UK declaration of conformity	✓
ACMA declaration of conformity	✓
Moroccan declaration of conformity	✓
China RoHS	✓
ULus approval	✓
cUL approval	✓
EC-Type-Examination approval	✓
China GB certificate	✓
Information according to Art. 3 of Data Act (Regulation EU 2023/2854)	✓

DIMENSIONAL DRAWING

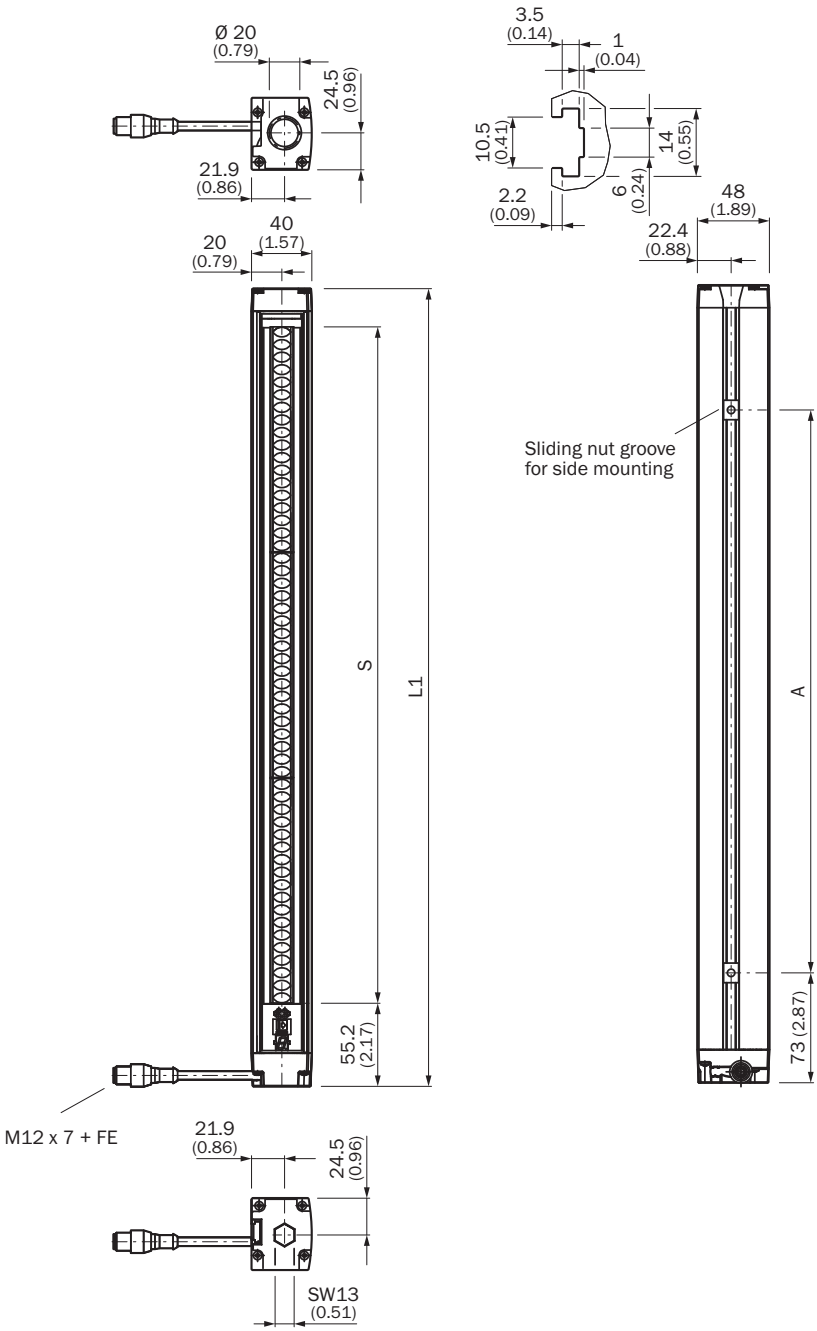

Dimensions in mm (inch)
illustration sender (receiver mirror image)

Protective field height S	L	A
150	220	76
300	380	224
450	530	374
600	680	524
750	830	674
900	981	825
1.050	1.131	975
1.200	1.281	1.125
1.350	1.432	1.275

Protective field height S	L	A
1.500	1.583	1.427
1.650	1.733	1.504
1.800	1.884	1.728

Further information as well as suitable accessories, example applications and downloads such as CAD dimensional models, operating instructions and software can be found at www.sick.com/1028881

SICK AG
WALDKIRCH
GERMANY
SICK.COM

SICK AT A GLANCE

SICK is a leading global technology company for intelligent sensors and integrated solutions in industrial automation. Our technologies set benchmarks, making your industrial processes more efficient, safer and more sustainable – both in logistics and manufacturing operations.

SICK combines sensor intelligence with industry expertise and certified consulting services. We provide the ideal foundation for scalable as well as tailor-made automation solutions and create added value along the entire value chain. Our close partnerships with our customers are more than just a promise: Together, we optimize productivity, improve quality, protect health and safety, and help build a sustainable future. All with empathy and trust.

Since 1946, we have been developing innovative technologies with passion and a pioneering spirit. With a global network in around 40 countries, SICK has a global presence and is always close by. The company's headquarters are located in Waldkirch near Freiburg, Germany. Our customers benefit from our understanding of both local and global requirements, which enables us to deliver tailor-made solutions

SICK
Sensor Intelligence