SICK.COM

DATA SHEET

C40S-1803CP010

C4000 Palletizer
Safety light curtains

Sensor Intelligence

ПРОМЭЛЕКТРОНИКА / sales@prom-elec.com

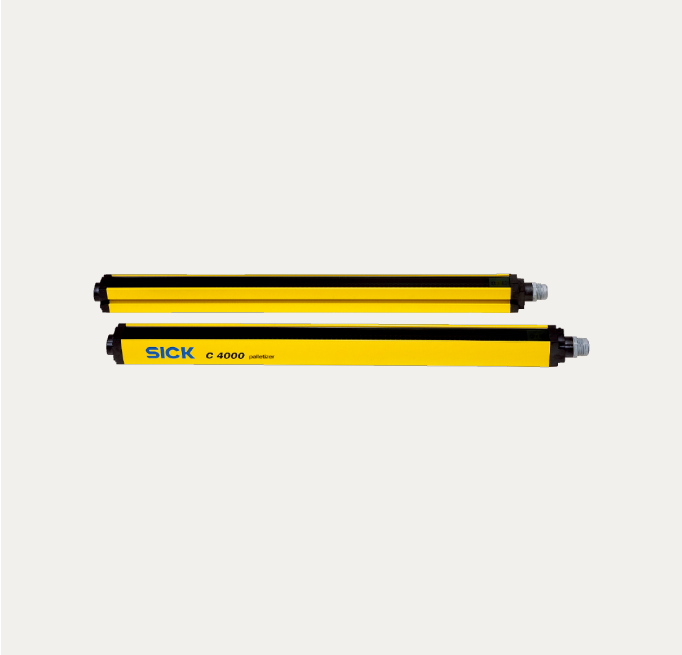

Illustration may differ

SAFETY LIGHT CURTAINS

C40S-1803CP010

ORDERING INFORMATION

Type	part no.
C40S-1803CP010	1027114

Further device versions and accessories at www.sick.com/C4000_Palletizer

DETAILED TECHNICAL DATA

FEATURES

Application	Normal industrial environment
System part	Sender
Resolution	30 mm
Scanning range	7 m
Protective field height	1,800 mm
Synchronization	Optical synchronization
Items supplied	Sender

SAFETY-RELATED PARAMETERS

Type	Type 4 (IEC 61496-1)
Safety integrity level	SIL 3 (IEC 61508)
Category	Category 4 (EN ISO 13849)
Performance level	PL e (EN ISO 13849)
PFH_D (mean probability of a dangerous failure per hour)	$15 * 10^{-9}$
T_M (mission time)	20 years (EN ISO 13849)
Safe state in the event of a fault	At least one OSSD is in the OFF state.

FUNCTIONS

	Functions	Delivery status
Protective operation	✓	
Beam coding	✓	Code 1
Configurable scanning range	✓	0.5 m ... 7 m
Safe SICK device communication via EFI	✓	

INTERFACES

System connection	
Direction of cable connection	Straight
Conductor cross section	0.75 mm²
Permitted cable length	50 m [1]
Display elements	7-segment display

[1] Depending on load, power supply and wire cross-section. The technical specifications must be observed.

ELECTRONICS

Protection class	III (IEC 61140)
Supply voltage V_S	24 V DC (19.2 V ... 28.8 V) [1]
Residual ripple	≤ 10 % [2]

[1] The external voltage supply must be capable of buffering brief mains voltage failures of 20 ms as specified in EN 60204-1. Suitable power supplies are available as accessories from SICK.

[2] Within the limits of V_S.

MECHANICS

Dimensions	See dimensional drawing
Housing cross-section	48 mm x 40 mm
Housing material	Aluminum extruded profile
Weight	3,680 g

AMBIENT DATA

Enclosure rating	IP65 (EN 60529)
Ambient operating temperature	0 °C ... +55 °C
Storage temperature	–25 °C ... +70 °C
Air humidity	15 % ... 95 %, Non-condensing
Vibration resistance	5 g, 10 Hz ... 55 Hz (EN 60068-2-6)
Shock resistance	10 g, 16 ms (EN 60068-2-27)

OTHER INFORMATION

Wave length	850 nm
Type of light	Near-infrared (NIR), invisible

DIMENSIONAL DRAWING

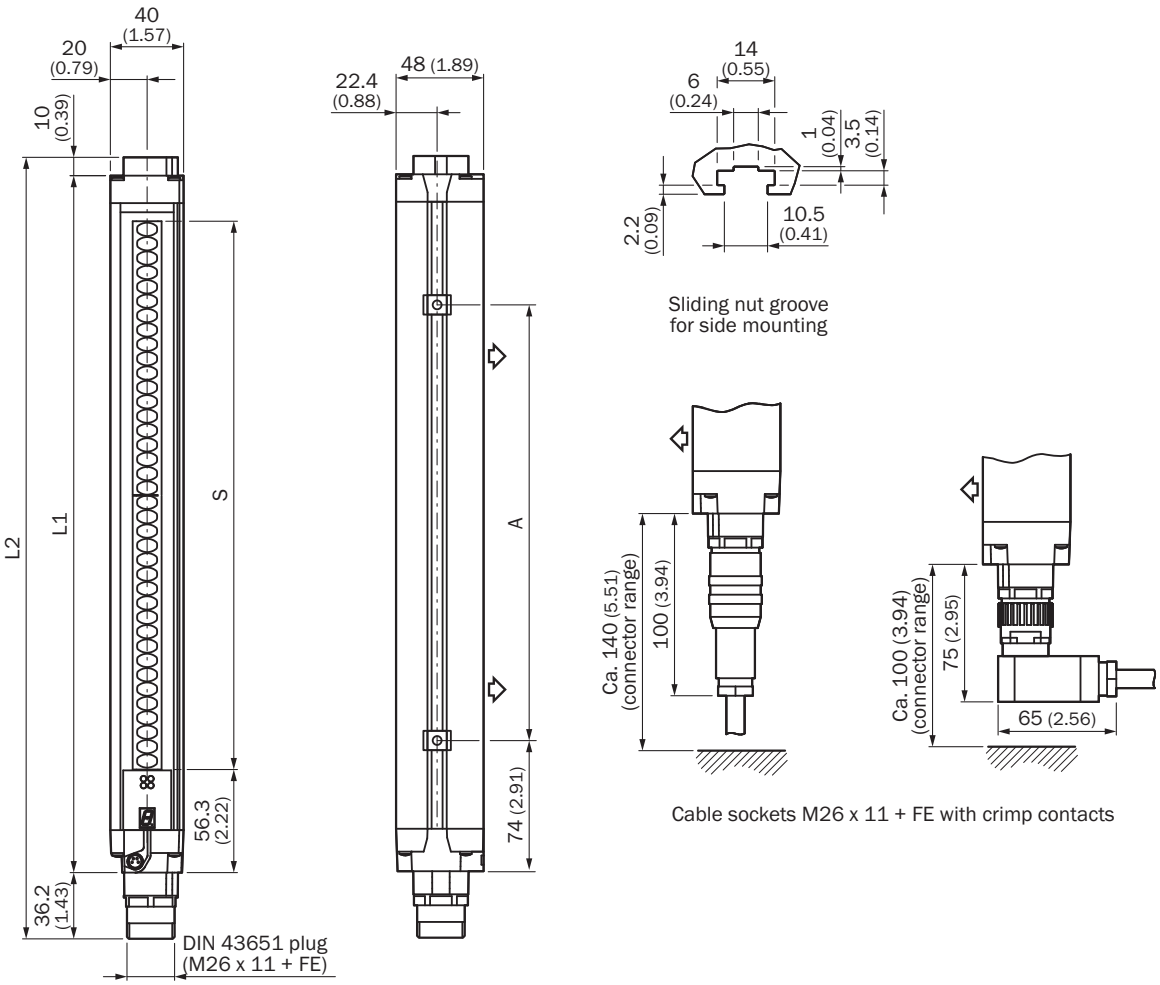

Dimensions in mm (inch)
illustration sender (receiver mirror image)

	L1	L2	A
300	381	427	224
450	532	578	374
600	682	728	524
750	833	879	674
900	984	1.030	824
1.050	1.134	1.180	974
1.200	1.283	1.329	1.124
1.350	1.435	1.481	1.274
1.500	1.586	1.632	1.424
1.650	1.736	1.782	1.574
1.800	1.887	1.933	1.724

Further information as well as suitable accessories, example applications and downloads such as CAD dimensional models, operating instructions and software can be found at www.sick.com/1027114

SICK AG
WALDKIRCH
GERMANY
SICK.COM

SICK AT A GLANCE

SICK is a leading global technology company for intelligent sensors and integrated solutions in industrial automation. Our technologies set benchmarks, making your industrial processes more efficient, safer and more sustainable – both in logistics and manufacturing operations.

SICK combines sensor intelligence with industry expertise and certified consulting services. We provide the ideal foundation for scalable as well as tailor-made automation solutions and create added value along the entire value chain. Our close partnerships with our customers are more than just a promise: Together, we optimize productivity, improve quality, protect health and safety, and help build a sustainable future. All with empathy and trust.

Since 1946, we have been developing innovative technologies with passion and a pioneering spirit. With a global network in around 40 countries, SICK has a global presence and is always close by. The company's headquarters are located in Waldkirch near Freiburg, Germany. Our customers benefit from our understanding of both local and global requirements, which enables us to deliver tailor-made solutions

SICK
Sensor Intelligence