SICK.COM

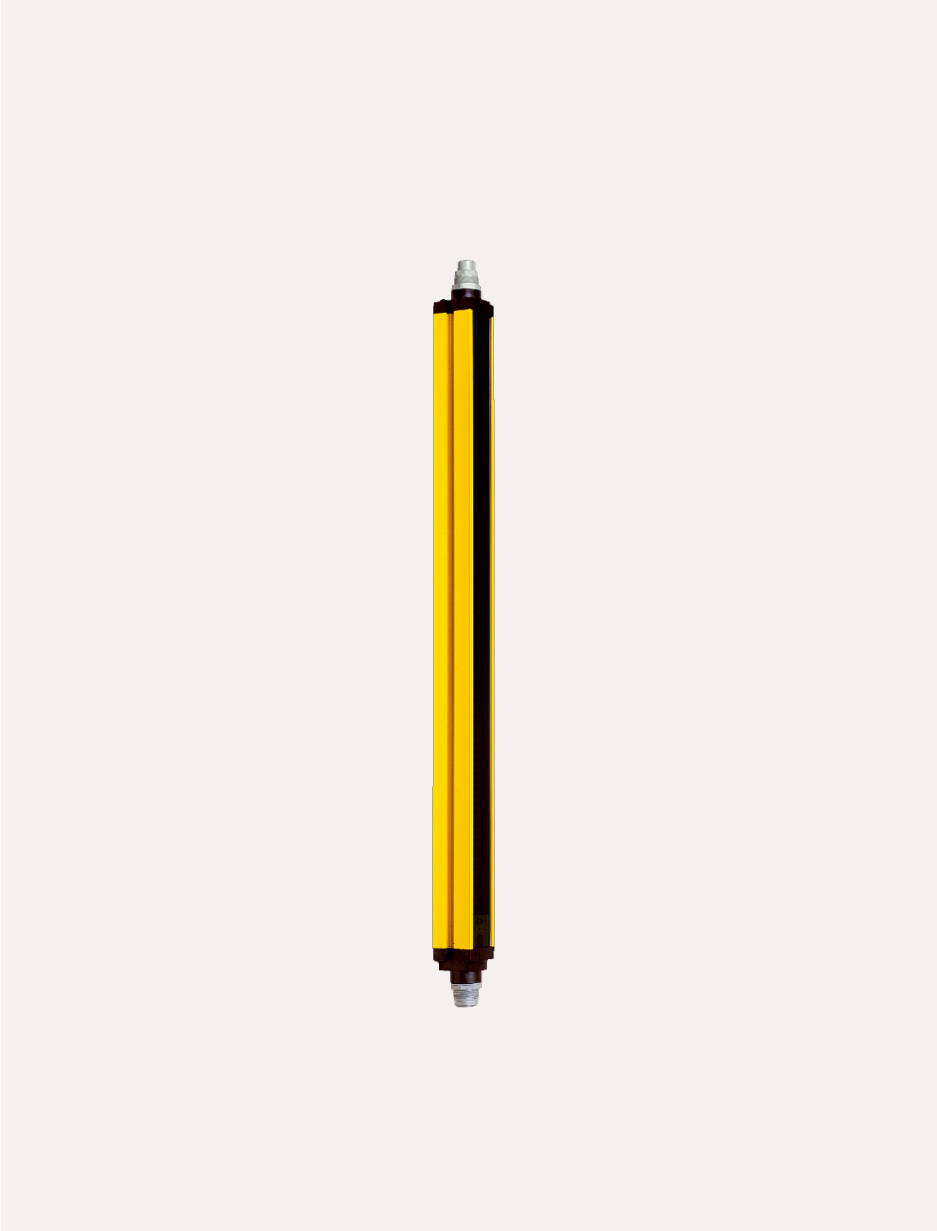

DATA SHEET

C40S-0402DA010

C4000 Advanced
Safety light curtains

SICK Sensor Intelligence

ПРОМЭЛЕКТРОНИКА / sales@prom-elec.com

Illustration may differ

SAFETY LIGHT CURTAINS

C40S-0402DA010

ORDERING INFORMATION

Type	part no.
C40S-0402DA010	1018712

Further device versions and accessories at www.sick.com/C4000_Advanced

DETAILED TECHNICAL DATA

FEATURES

Application	Normal industrial environment
System part	Sender
Resolution	20 mm
Scanning range	21 m
Protective field height	450 mm
Synchronization	Optical synchronization

SAFETY-RELATED PARAMETERS

Type	Type 4 (IEC 61496-1)
Safety integrity level	SIL 3 (IEC 61508)
Category	Category 4 (EN ISO 13849)
Performance level	PL e (EN ISO 13849)
PFH_D (mean probability of a dangerous failure per hour)	$15 * 10^{-9}$ (EN ISO 13849) $43 * 10^{-9}$ (EN ISO 13849) $63 * 10^{-9}$ (EN ISO 13849)
T_M (mission time)	20 years (EN ISO 13849)
Safe state in the event of a fault	At least one OSSD is in the OFF state.

FUNCTIONS

	Functions	Delivery status
Protective operation	✓	
Restart interlock	✓	
External device monitoring (EDM)	✓	Deactivated
Beam coding	✓	Uncoded

Configurable scanning range	✓	0 m ... 6 m
Fixed blanking	✓	Deactivated
Floating blanking	✓	Deactivated
Safe SICK device communication via EFI	✓	

FUNCTIONS IN COMBINATION WITH UE402

Bypass	✓
Operating mode switching	✓
PSDI mode	✓

INTERFACES

System connection	
Direction of cable connection	Straight
Conductor cross section	0.75 mm²
Permitted cable length	50 m [1]
Extension connection	Hirschmann female connector M26, 12 pin
Display elements	7-segment display

[1] Depending on load, power supply and wire cross-section. The technical specifications must be observed.

ELECTRONICS

Protection class	III (IEC 61140)
Supply voltage V_S	24 V DC (19.2 V ... 28.8 V) [1]
Residual ripple	≤ 10 % [2]

[1] The external voltage supply must be capable of buffering brief mains voltage failures of 20 ms as specified in EN 60204-1. Suitable power supplies are available as accessories from SICK.

[2] Within the limits of V_S.

MECHANICS

Dimensions	See dimensional drawing
Housing cross-section	48 mm x 40 mm
Housing material	Aluminum extruded profile
Weight	1,100 g

AMBIENT DATA

Enclosure rating	IP65 (EN 60529)
Ambient operating temperature	0 °C ... +55 °C
Storage temperature	–25 °C ... +70 °C
Air humidity	15 % ... 95 %, Non-condensing
Vibration resistance	5 g, 10 Hz ... 55 Hz (EN 60068-2-6)
Shock resistance	10 g, 16 ms (EN 60068-2-27)

OTHER INFORMATION

Wave length	850 nm

CERTIFICATES

EU declaration of conformity	✓
UK declaration of conformity	✓
ACMA declaration of conformity	✓
Moroccan declaration of conformity	✓
China RoHS	✓
ULus approval	✓
cUL approval	✓
Taiwan OSHA certificate	✓
EC-Type-Examination approval	✓
China GB certificate	✓
Information according to Art. 3 of Data Act (Regulation EU 2023/2854)	✓

DIMENSIONAL DRAWING

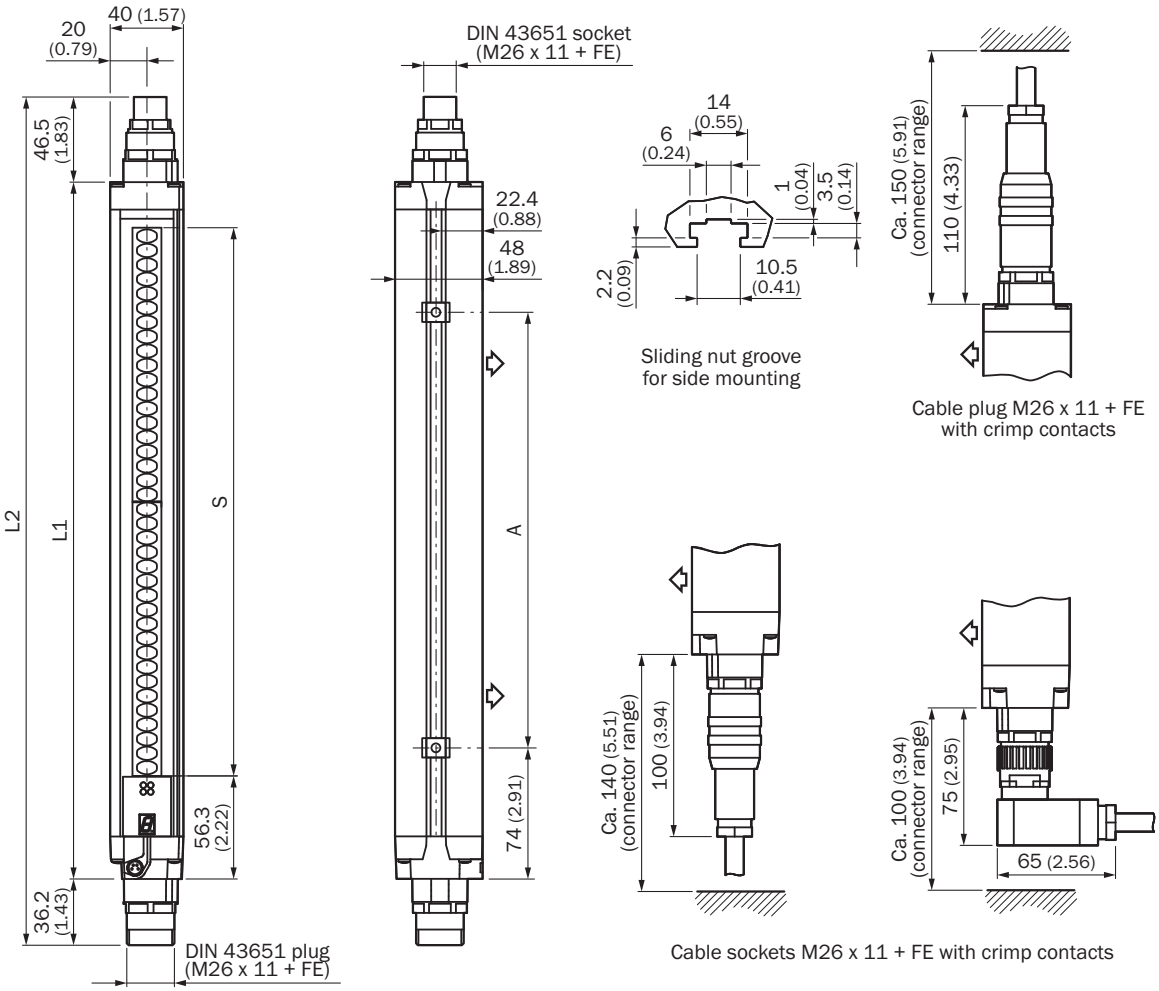

Dimensions in mm (inch)
illustration sender (receiver mirror image)

	L1	L2	A
300	381	464	224
450	532	614	374

	L1	L2	A
600	682	765	524
750	833	915	674
900	984	1.066	824
1.050	1.134	1.216	974
1.200	1.283	1.366	1.124
1.350	1.435	1.517	1.274
1.500	1.586	1.669	1.424
1.650	1.736	1.818	1.574
1.800	1.887	1.969	1.724

CONNECTION DIAGRAM C4000 SAFETY LIGHT CURTAIN TO UE10-3OS SAFETY RELAY

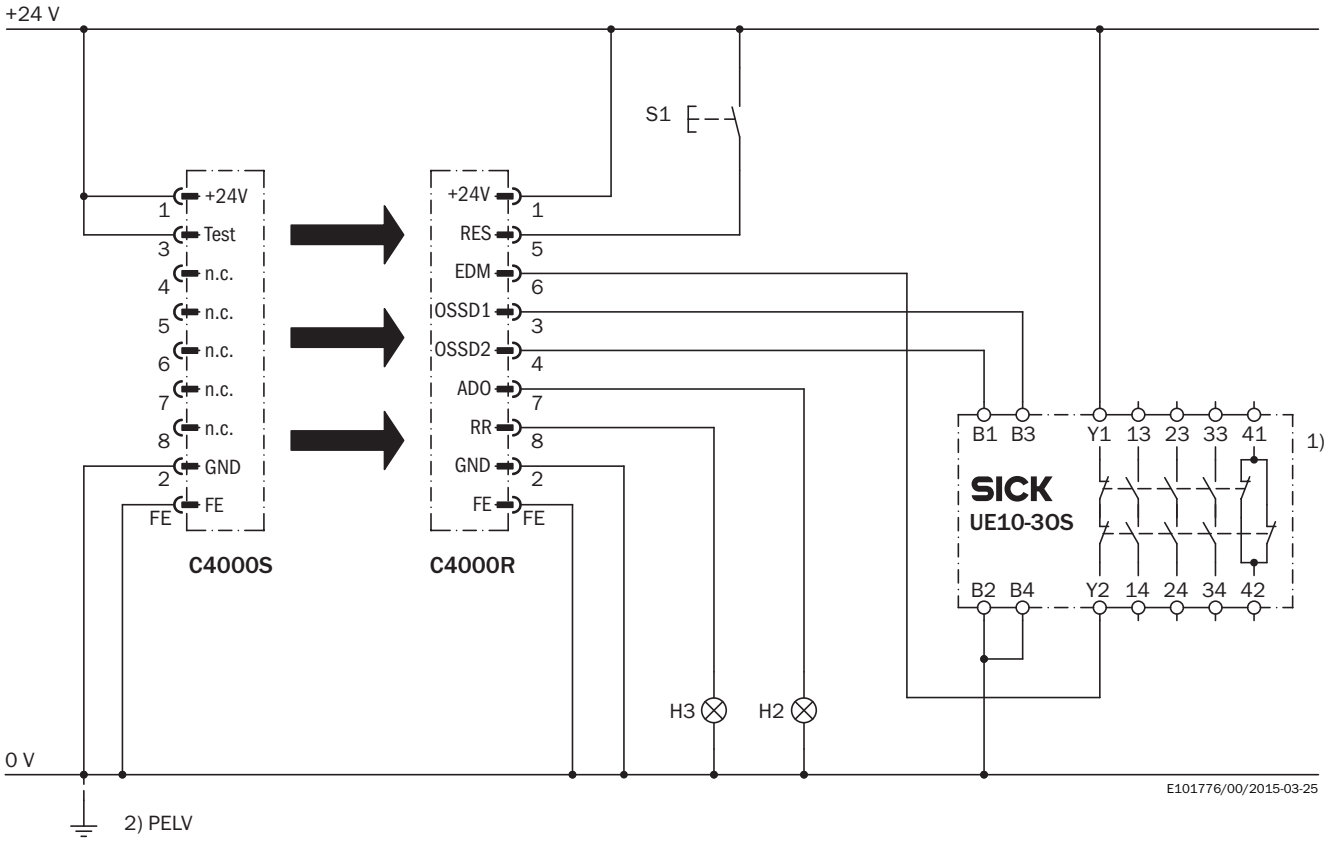

Task

Connection of a C4000 Standard/Advanced/Palletizer/Fusion safety light curtain to UE10-3OS. Operating mode with restart interlock and external device monitoring.

Function

When the light path is clear and the UE10-3OS is de-energized and functioning correctly, the yellow LED on the receiver and the H3 lamp flash. The system is ready to be switched on. The system is enabled by pressing S1 (button is pressed and released). The OSSD1 and OSSD2 outputs are live, and the UE10-3OS is switched on. Upon the interruption of one of the light beams, the UE10-3OS is deactivated by the OSSD1 and OSSD2 outputs.

Possible faults

Cross-circuits and short-circuits of the OSSDs are detected and lead to the inhibited state (lock-out). The incorrect functioning of the UE10-3OS will be detected, but will not result in the loss of the shutdown function. Jamming of the S1 button prevents the output circuit from enabling. H2 lamp is illuminated if there is contamination (adjustable parameter).

Comments

[1] Output circuits: These contacts are to be connected to the controller such that, with the output circuit open, the dangerous state is disabled. For categories 4 and 3, this integration must be dual-channel (x/y paths). Single-channel integration in the control (z path) is only possible with a single-channel control and taking the risk analysis into account.
[2] PELV as required in EN 60204-1 / 6.4
The related operating instructions for the integrated devices must be observed.

Further information as well as suitable accessories, example applications and downloads such as CAD dimensional models, operating instructions and software can be found at www.sick.com/1018712

SICK AG
WALDKIRCH
GERMANY
SICK.COM

SICK AT A GLANCE

SICK is a leading global technology company for intelligent sensors and integrated solutions in industrial automation. Our technologies set benchmarks, making your industrial processes more efficient, safer and more sustainable – both in logistics and manufacturing operations.

SICK combines sensor intelligence with industry expertise and certified consulting services. We provide the ideal foundation for scalable as well as tailor-made automation solutions and create added value along the entire value chain. Our close partnerships with our customers are more than just a promise: Together, we optimize productivity, improve quality, protect health and safety, and help build a sustainable future. All with empathy and trust.

Since 1946, we have been developing innovative technologies with passion and a pioneering spirit. With a global network in around 40 countries, SICK has a global presence and is always close by. The company's headquarters are located in Waldkirch near Freiburg, Germany. Our customers benefit from our understanding of both local and global requirements, which enables us to deliver tailor-made solutions

SICK
Sensor Intelligence