Leuze electronic

the sensor people

S400

Safety switch

EN 2014/07 - 607920
We reserve the right to
make technical changes

SAFE IMPLEMENTATION AND OPERATION

Original operating instructions

ПРОМЭЛЕКТРОНИКА / sales@prom-elec.com

© 2014
Leuze electronic GmbH + Co. KG
In der Braike 1
D-73277 Owen / Germany
Phone: +49 7021 573-0
Fax: +49 7021 573-199
http://www.leuze.com
info@leuze.de

1 About this document . . . 4
1.1 Other applicable documents . . . 4
1.2 Used symbols and signal words . . . 4

2 Safety . . . 5
2.1 Approved purpose and foreseeable improper operation . . . 5
2.1.1 Proper use . . . 5
2.1.2 Foreseeable misuse . . . 6
2.2 Competent personnel . . . 6
2.3 Responsibility for safety . . . 6
2.4 Disclaimer . . . 7

3 Device description . . . 8
3.1 Device overview . . . 8

4 Functions . . . 10
4.1 Special functions and performance characteristics of the S420-OSx series . . . 10
4.2 Display elements . . . 10

5 Applications . . . 12

6 Mounting . . . 13
6.1 Mounting the safety hinge switch . . . 13

7 Electrical connection . . . 20
7.1 Connecting the contact block . . . 20

8 Starting up the device . . . 24

9 Testing . . . 25
9.1 To be performed prior to the initial start-up by competent personnel . . . 25
9.2 To be performed periodically by competent personnel . . . 25
9.3 To be performed daily by the operating personnel . . . 25

10 Cleaning . . . 26

11 Disposing . . . 27

12 Service and support . . . 28

13 Technical data . . . 29
13.1 Dimensions . . . 32

14 Ordering information and accessories . . . 35
14.1 Accessories . . . 35

15 EC Declaration of Conformity . . . 38

1 About this document

1.1 Other applicable documents

The information on the S400, S410 and S420 safety hinge switches is divided into two documents. Document “S400 Application information” contains only the most important safety notices.

↳ For the safe implementation, testing and operation, download document “S400 Safe implementation and operation” from http://www.leuze.com/s400/ or request it from service.protect@leuze.de or tel. +49 8141 5350-111.

Table 1.1: Documents on the safety hinge switch

Purpose and target group	Title	Source
Detailed information for all users	S400 Safe implementation and operation (this document)	On the Internet, download from: http://www.leuze.com/s400/
Basic information for technicians and operating company	S400 Application information	Print document part no. 607240 included in the delivery contents of the product

1.2 Used symbols and signal words

Table 1.2: Warning symbols and signal words

⚠	Symbol for dangers
NOTICE	Signal word for property damage Indicates dangers that may result in property damage if the measures for danger avoidance are not followed.
CAUTION	Signal word for minor injury Indicates dangers that may result in minor injury if the measures for danger avoidance are not followed.
WARNING	Signal word for serious injury Indicates dangers that may result in severe or fatal injury if the measures for danger avoidance are not followed.
DANGER	Signal word for life-threatening danger Indicates dangers that will result in severe or fatal injury if the measures for danger avoidance are not followed.

Table 1.3: Other symbols

ℹ	Symbol for tips Text passages with this symbol provide you with further information.
↳	Symbols for action steps Text passages with this symbol instruct you to perform actions.
xxx	Placeholder in the product description for all variants

2 Safety

Before using the safety hinge switch, a risk assessment must be performed according to valid standards (e.g. EN ISO 12100, EN ISO 13849-1). For mounting, operating and testing, document S400 Sicher implementieren und betreiben, application information as well as all applicable national and international standards, regulations, rules and directives must be observed. Observe and print out relevant and supplied documents and distribute to the affected personnel.

The following standards apply for the risk assessment at the protective device prior to using the safety hinge switch:

- EN ISO 12100, Safety of machinery, risk assessment
- EN ISO 13849-1, Safety-related parts of control systems

The realizable category of the integration in control circuits according to EN ISO 13849-1 is dependent on the used contact block and wiring.

In particular, the following national and international legal regulations apply for the start-up, technical inspections and work with safety hinge switch:

- Machinery directive 2006/42/EC
- Low voltage directive 2006/95/EC
- Use of work equipment directive 2009/104/EC
- Safety regulations
- Accident-prevention regulations and safety rules
- Industrial safety regulation and employment protection act
- Product Safety Act

For safety-related information you may also contact the local authorities (e.g., industrial inspectorate, employer's liability insurance association, labor inspectorate, occupational safety and health authority).

2.1 Approved purpose and foreseeable improper operation

2.1.1 Proper use

- The safety hinge switch must only be used after it has been selected in accordance with the respectively applicable instructions and relevant standards, rules and regulations regarding labor protection and safety at work, and after it has been installed on the machine, connected, commissioned, and checked by a **competent and authorized person**.
- When selecting the safety hinge switch it must be ensured that its safety-related capability meets or exceeds the required performance level PL_r ascertained in the risk assessment.
- It must be in perfect condition and inspected regularly.
- The safety hinge switch may be used in combination with a safety relay or a safety control.

WARNING

A running machine can cause severe injuries!

↳ Make certain that, during all conversions, maintenance work and inspections, the system is securely shut down and protected against being restarted.

S400, S410 and S420 safety hinge switches must be connected in such a way that a dangerous state can only be activated while the protective device is closed and so that the dangerous state stops upon opening of the protective device. It must not be used if the point of operation can be accessed during the lag time before the dangerous state has ended. If stepping behind the guard is possible, a start/restart interlock is mandatory.

Connection conditions:

- the dangerous state can only be activated while the protective device is closed
- opening the protective device while the machine is running triggers a stop command and ends the dangerous state

ПРОМЭЛЕКТРОНИКА / sales@prom-elec.com

Furthermore, the S400, S410 or S420 safety hinge switch must **not** be used under the following conditions:

- rapidly changing ambient temperature (leads to condensation)
- in the event of strong physical shocks
- when ice has formed
- in explosive or easily flammable atmospheres
- in the event of aggressive chemical influences
- the mounting locations are not sufficiently stable
- the safety of multiple persons is dependent on the function of this safety switch (e.g. nuclear power plants, trains, aircraft, motor vehicles, incinerators, medical devices)

For machines with longer slowdowns, a safety locking device must be used.

Handling the safety hinge switch:

- Observe the permissible environmental conditions for storage and operation (see chapter 13 „Technical data“).
- Immediately replace damaged safety hinge switch according to these instructions.
- Use cable gland, insulation materials and connecting wires of the appropriate protection rating.
- Protect the safety hinge switch from penetrating foreign bodies (e.g. shavings, sand and blasting agent).
- Cover before performing painting work.
- Immediately clean any contamination from the safety hinge switch that impacts function according to these instructions.
- Do not open the cover on the rear side.
- Make no structural changes to the safety hinge switch.
- The safety hinge switch must be exchanged after a maximum of 20 years.

2.1.2 Foreseeable misuse

Any use other than that defined under the "approved purpose" or which goes beyond that use of the safety hinge switch is considered improper use!

E.g. - using without non-detachably mounted actuator

- looping into the safety circuit parts that are not relevant to safety
- using the hinge switch as a limit stop

2.2 Competent personnel

Prerequisites for competent personnel:

- suitable technical training
- knows the rules and regulations for labor protection, safety at work and safety technology and can assess the safety of the machine
- knows the instructions for the safety hinge switch and the machine and understands them
- was instructed by the responsible individuals on the mounting and operation of the machine and of the safety hinge switch

2.3 Responsibility for safety

Manufacturer and operating company must ensure that the machine and implemented safety hinge switch function properly and that all affected persons are adequately informed and trained.

The type and content of all imparted information must not lead to unsafe actions by users.

The manufacturer of the machine is responsible for:

- safe machine construction
- safe implementation of the safety hinge switch
- imparting all relevant information to the operating company
- adhering to all regulations and directives for the safe starting-up of the machine

The operating company is responsible for:

- instructing the operating personnel
- maintaining the safe operation of the machine
- adhering to all regulations and directives for labor protection and safety at work
- regular testing by competent personnel

2.4 Disclaimer

Leuze electronic GmbH + Co. KG is not liable in the following cases:

- Safety hinge switch is not used as intended
- Safety notices are not adhered to
- Testing is not performed by competent and authorized personnel
- Faulty mounting, connection, start-up
- Deficient execution of tests for proper protective function
- Reasonably foreseeable misuse is not taken into account (e.g. manipulation, reaching behind the safety device)
- Technical data is not observed

3 Device description

3.1 Device overview

The S400, S410 and S420 safety hinge switches are very compact and stable electro-mechanical switching devices in a housing made of metal (stainless steel for the S420); the devices satisfy protection rating IP 67 and IP 69K. The actuator is integrated into the housing. Depending on the version, electrical connection is done either via a cable or a M12 plug with optional cable entry from above, below or on the wall side (mounting side). This enables monitoring of all types of doors, hoods, flaps, etc. The opening angle of the safety hinge switch is up to 180°. The switching angle is adjustable and can be adjusted multiple times if necessary (e.g. misadjusted door).

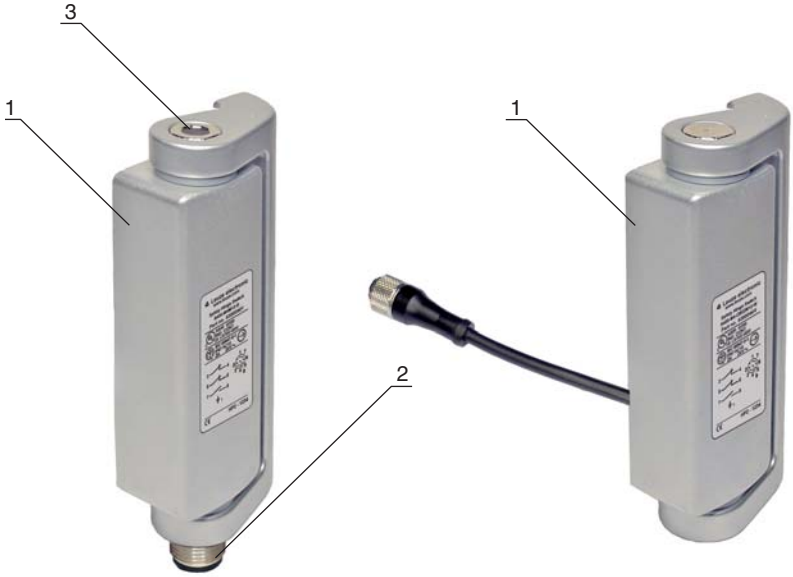

1 Safety hinge switch
2 Cable entry or M12 plug
3 Opening for adjusting the switching angle

Figure 3.1: S400 safety hinge switch

Figure 3.2: S410 safety hinge switch

Figure 3.3: S420 safety hinge switch

The S400 series has a total width of 49 mm.
The S410 series has a total width of 79 mm.
The S420 series has a total width of 76 mm.

The M4 models are equipped with slow action contacts (2NC/1NO).
The M1 models are equipped with snap-action contacts (2NC/1NO).
The 9 models are equipped with slow action contacts (2NC/2NO).
The OS models are equipped with two safety-related switching outputs (OSSDs), two inputs and a signal output.

4 Functions

S400, S410 and S420 safety hinge switches are used as a mechanical hinges and simultaneously for position monitoring of turning, bearing-mounted guards. The integrated safety contacts are force-opened as soon as the preset switching angle is reached. As a result, the machine can only be switched on if the protective device is closed.

In all models, the switching angle can be reset multiple times (e.g. when the door is misaligned) via the protected adjusting screw. The covered screw mounting has a strong manipulation-resistant effect.

The S420 series satisfies strict requirements, e.g. in the food, pharmaceutical and cosmetic industries, thanks to the stainless steel housing in accordance with safety class IP 67 and IP 69K with mechanical load values up to 2000 N.

For the S420 series, versions are contact-supported or available with electronic inputs and OSSDs.

4.1 Special functions and performance characteristics of the S420-OSx series

- 2 electronic inputs
- 2 safety-related switching outputs (OSSDs)
- 1 signal output of actuator status
- Series connection of up to 32 S420-OSx
- Safety category 4, PL e, SIL CL 3
- Diagnosis display (LEDs) of operating voltage, self test, actuator status, OSSD status and input status

4.2 Display elements

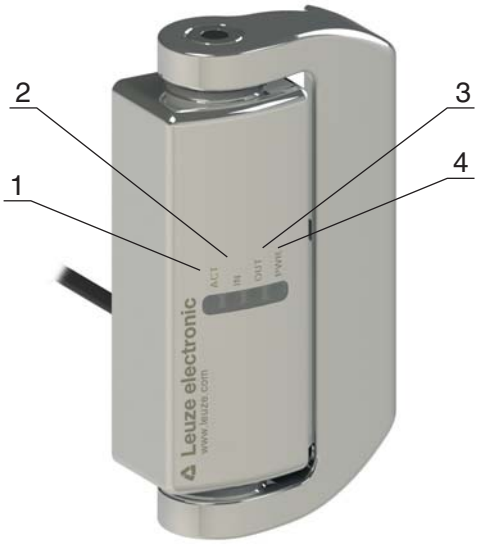

1	LED ACT
2	LED IN
3	LED OUT
4	LED PWR

Table 4.1: Meaning of the LEDs

LED PWR	LED OUT	LED IN	LED ACT	S420-OSx status	Actuator detected	IN[a)]	OS1/ OS2	O3	Description
off	off	off	off	off	no	b)	off	off	S420-OSx not switched on
orange	off	off	off	U_B switched on	b)	b)	off	off	internal test mode
green	green	green	green	operation	yes	yes	on	on	monitored operation
green	off	green	off	operation	no	yes	off	off	input condition fulfilled
green	off	off	green	operation	yes	no	off	on	actuator detected, input condition not fulfilled
green	off	off	off	operation	no	no	off	off	actuator not detected, input condition not fulfilled
green	off	flashing orange/ green	green	operation	yes	irregular	off	on	check and deactivate both input signals
green	off	flashing orange/ green	green	operation	no	irregular	off	off	check and deactivate both input signals
green	green	green	flashing orange/ green	operation	on the limit	yes	on	off	check actuator/realign door
green	off	off	flashing orange/ green	operation	on the limit	no	off	on	check and deactivate both input signals, test actuator/realign door
green	off	flashing orange/ green	flashing orange/ green	operation	on the limit	irregular	off	on	check and deactivate both input signals, test actuator/realign door
green	red flashing	off	off	error (output)	yes	yes	off	off	check for cross connection and short circuit, restart
red	off	off	off	error (internal)	b)	b)	off	b)	restart or exchange

a) 2 input signals are present

b) irrelevant

Hinge switches of the S420 series with integrated OSSDs independently monitor the fulfillment of the input condition and the redundancy of the actuator monitoring.

If one of the input signals is switched off, the S420-OSx switches both OSSDs off. Before activating the OSSDs again, both input signals must be switched off and then reactivated.

In the event of very slow or minimal partial opening of the actuator, the S420-OSx switches both OSSDs off. Before activating the OSSDs again, the actuator must be opened completely and then shut again.

In the event of fundamental errors (e.g. short circuit of the OSSDs) the diagnosis LEDs illuminate or blink red. After trouble shooting and the following reset (switch-off of supply voltage), the S420-OSx switches back to the normal operating mode.

5 Applications

The safety hinge switch is suitable for e.g. the following protective devices:

- turning or swiveling moveable guards, flaps and hoods
- in environments with high dust concentration or high levels of particulate matter
- for stricter hygiene requirements (S420)

6 Mounting

WARNING

Severe accidents may result if the safety hinge switch is not mounted properly!

The protective function of the safety hinge switch is only ensured if correctly mounted and adjusted for the respective, intended area of application.

- Mounting may only be performed by competent personnel.
- Observe standards, regulations and these instructions.
- Protect the housing from materials penetrating the enclosure, consider environmental conditions (see chapter 13 „Technical data“).
- Use separate mechanical limit stop (see figure 6.1).
- Set the switching angle so that the guard cannot be circumvented (e.g. by reaching around or walking behind).
- Test to ensure proper function.

6.1 Mounting the safety hinge switch

Prerequisites for mounting:

- M5 (M6 for S420) fastening screws of the correct length (see figure 6.1)

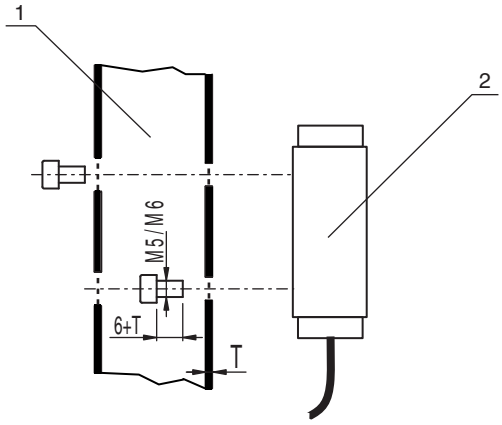

1 Frame (e.g. hollow chamber aluminum profile)
2 Safety hinge switch

Figure 6.1: Hinge mounts; length of the fastening screws = 6 + T mm

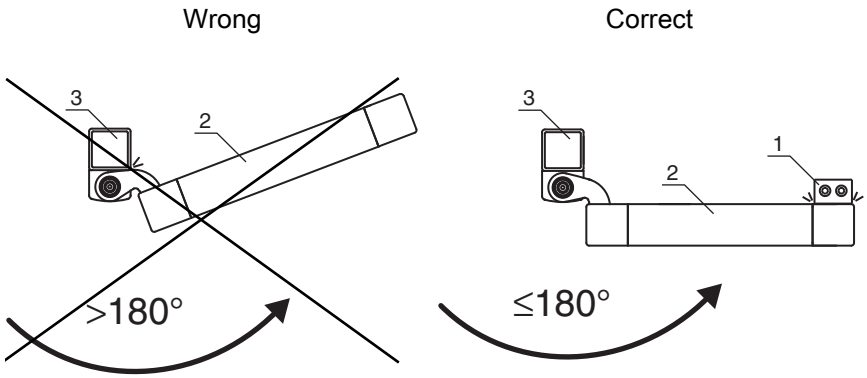

1 Mechanical limit stop
2 Door
3 Profile

Figure 6.2: Mechanical limit stop (1) for the moving part of the protective device

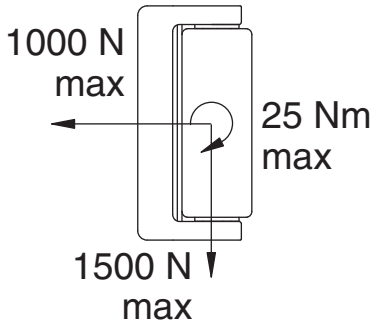

Figure 6.3: Maximum load of the S400 safety hinge switches

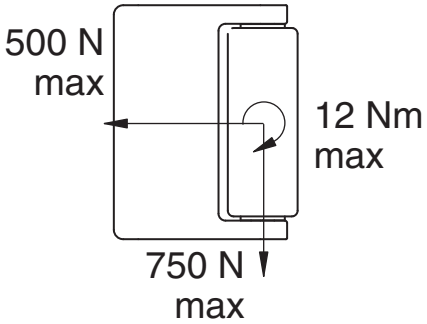

Figure 6.4: Maximum load of the S410 safety hinge switches

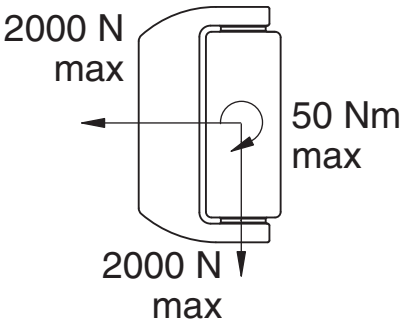

Figure 6.5: Maximum load of the S420 safety hinge switches

- Select the mounting locations for safety hinge switches and additional hinges (if necessary) so that the following conditions are satisfied:
  - accessible to qualified personnel for testing and replacement
  - form-fitting mounting is possible

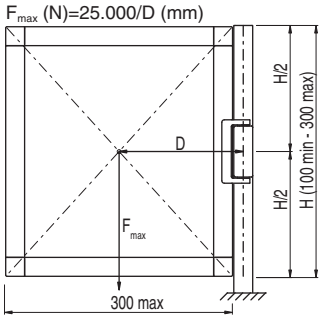

F_{max} Force exerted by door weight in N
D Distance from the center of gravity of the door to the hinge axis in mm

Figure 6.6: Door with 1 safety hinge switch S400

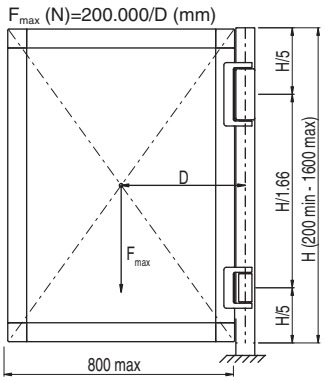

F_{max} Force exerted by door weight in N
D Distance from the center of gravity of the door to the hinge axis in mm

Figure 6.7: Door with 1 safety hinge switch S400 and 1 additional AC-H-S400 or AC-H-S400-S hinge

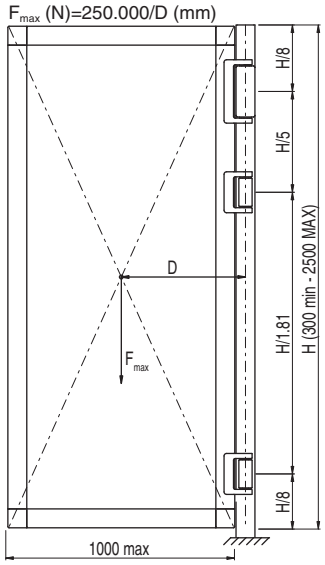

F_{max} Force exerted by door weight in N
D Distance from the center of gravity of the door to the hinge axis in mm

Figure 6.8: Door with 1 safety hinge switch S400 and 2 additional AC-H-S400 or AC-H-S400-S hinges

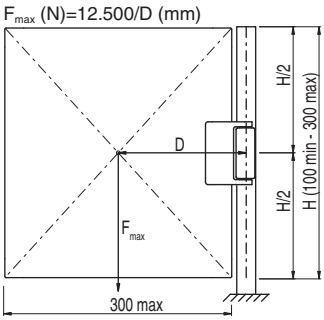

F_{max} Force exerted by door weight in N
D Distance from the center of gravity of the door to the hinge axis in mm

Figure 6.9: Door with 1 safety hinge switch S410

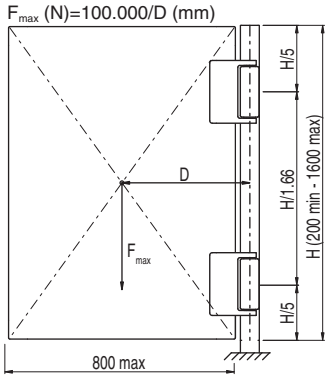

F_{max} Force exerted by door weight in N
D Distance from the center of gravity of the door to the hinge axis in mm

Figure 6.10: Door with 1 safety hinge switch S410 and 1 additional hinge AC-H-S410

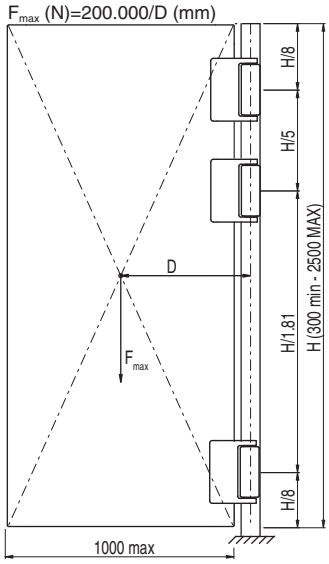

F_{max} Force exerted by door weight in N
D Distance from the center of gravity of the door to the hinge axis in mm

Figure 6.11: Door with 1 safety hinge switch S410 and 2 additional hinges AC-H-S410

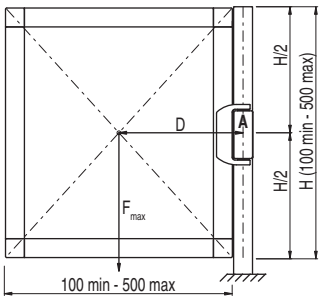

F_{max} Force exerted by door weight in N
D Distance from the center of gravity of the door to the hinge axis in mm

Figure 6.12: Door with 1 safety hinge switch S420

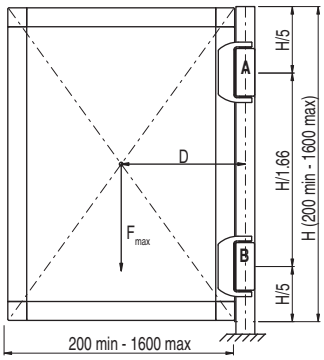

F_{max} Force exerted by door weight in N
D Distance from the center of gravity of the door to the hinge axis in mm

Figure 6.13: Door with 1 safety hinge switch S420 and 1 additional hinge AC-H-S420

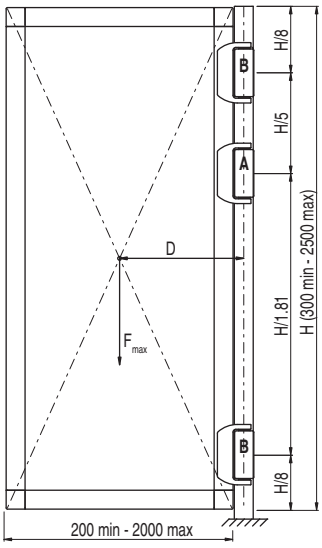

F_{max} Force exerted by door weight in N
D Distance from the center of gravity of the door to the hinge axis in mm

Figure 6.14: Door with 1 safety hinge switch S420 and 2 additional hinges AC-H-S420

NOTICE
The safety hinge switch may be damaged if mounted improperly! Screws that are too long or too short as well as faulty bore holes may damage the hinge. ↳ Measure the length of the mounting screws exactly (see figure 6.1). ↳ The position of the mounting bore holes should be exactly parallel to the profile axis. ↳ Use only additional hinges from the respective series.

↳ Prepare the bore holes for the safety hinge switch at the indicated positions (M5 or M6) (see chapter 3 „Device description“).

↳ If necessary, prepare bore holes for additional hinges at the indicated positions (M5 or M6) (see chapter 3 „Device description“).

↳ If necessary, put seal underneath.

↳ The axes of all hinges must align.

↳ Screw down safety hinge switch and additional hinges with 2–3 Nm (M5) or 10–12 Nm (M6).

↳ Set the switching angle of the safety hinge switch with a Phillips or flat-headed screwdriver (adjustment range: maximum 1 turn for S400 and S410, maximum 1.5 turns for S420).

↳ Provide limit stop at maximum opening angle (180°).

↳ Test whether the guard can be circumvented; if necessary, readjust the switching angle (acc. to EN ISO 13857).

⚠ WARNING
Failure of the switching function in the event of moisture, dust and tampering! ↳ Always plug the opening for adjusting the switching angle.

↳ Plug the opening for adjusting the switching angle with the sealing plug (see figure 6.15).

Figure 6.15: Sealing plug AC-SEPL-S4xx

↳ The S420 series includes a cloth for cleaning after mounting.

7 Electrical connection

WARNING

Serious accidents may result if the electrical connection is faulty!

↳ Electrical connection may only be performed by competent and authorized personnel.

7.1 Connecting the contact block

Prerequisites:

- temperature stability of the cable insulation material must be greater than the maximum temperature of the housing (see chapter 13 „Technical data“)
- connection via protected wiring
- maximum current load is observed (see chapter 13 „Technical data“)
- Take electrostatic precautionary measures (ESD) before handling the S420-OSx.
- Only operate the safety-related chain with separate 24 V current supply (SELV).

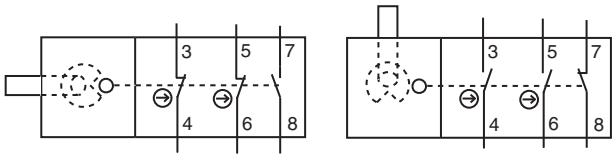

Figure 7.1: Contact block 2NC + 1NO (S400-M4xxx, S410-M4xxx with slow action contacts. S400-M1xxx, S410-M1xxx with snap-action contact)

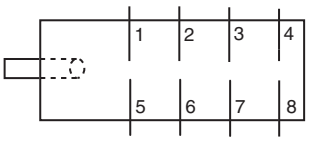

Figure 7.2: OSSD contact block versions (S420-OSx)

DANGER

Risk of death by electric shock!

↳ Interrupt the voltage supply to the safety hinge switch.

↳ Connect the contact block according to the application-specific circuit diagram.

↳ Provide NC contacts (⊖) for looping into the safety circuit.

↳ If current limiting is not provided for safety-related contacts, upstream fuses must be present.

↳ Avoid over-tightening, bending or stretching the cables.

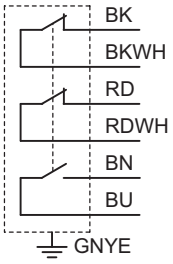

BK = black
WH = white
RD = red
BN = brown
BU = blue
GN = green
YE = yellow/green)

Figure 7.3: Assignments of connecting cables S400-M4CB2-B, S400-M4CB2-T, S400-M4-CB2PUR-W, S410-M1CB2-B, S410-M1CB2-T and S410-M4-CB2PUR-W

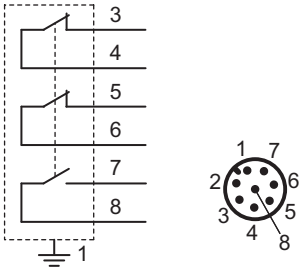

Figure 7.4: Assignments of 8-pin M12 plugs S400-M4M12-B, S400-M4M12-T, S400-M4-CB02M12-W, S400-M1-CB02M12-W, S410-M1M12-B, S410-M1M12-T and S410-M4-CB02M12-W

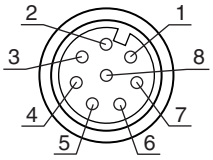

Figure 7.5: Pin assignment S420-9x, S420-OSx

Table 7.1: Pin assignment/core colors S420-9x

Pin	Wire color	Assignment
1	black	NC 1
2	black/white	NC 1
3	red	NC 2
4	red/white	NC 2
5	brown	NO 1
6	blue	NO 1
7	violet	NO 2
8	violet/white	NO 2
Shield	yellow/green	FE - functional earth, shield

Table 7.2: Pin assignment/core colors S420-OSx

Pin	Wire color	Assignment
1	brown	A1
2	red	IS1
3	blue	A2
4	red/white	OS1
5	black	O3
6	violet	IS2
7	black/white	OS2
8	violet/white	n.c.

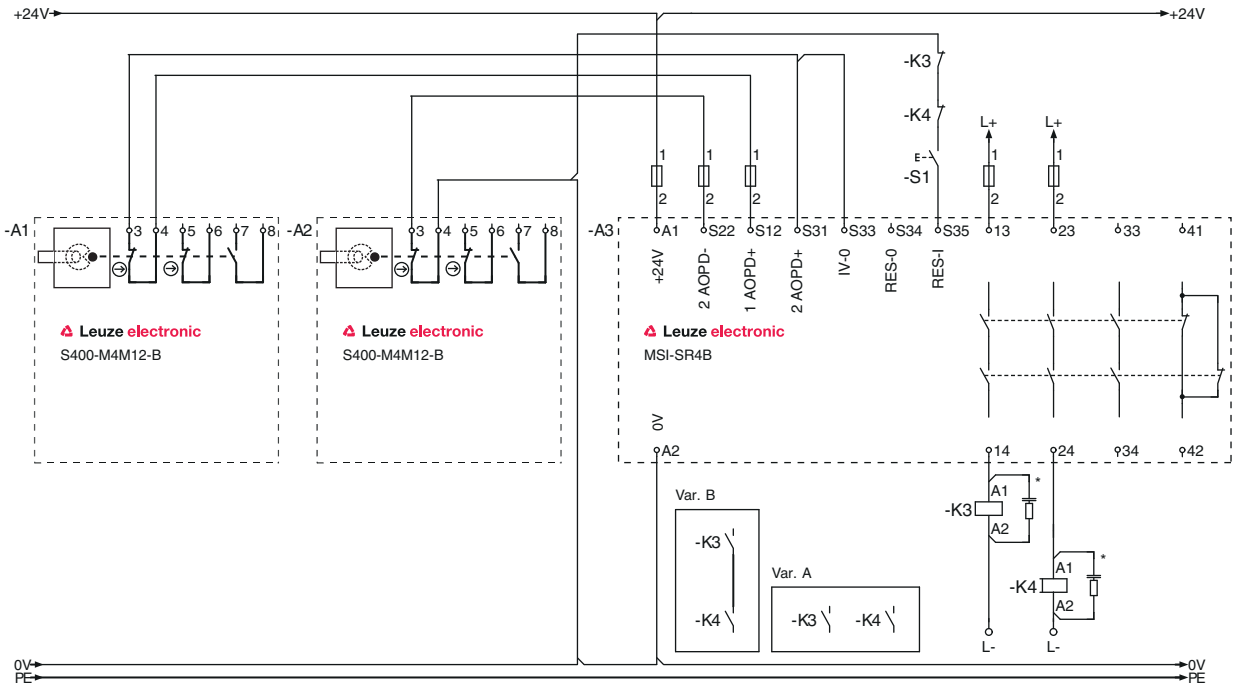

* Spark extinction circuit, suitable spark extinction provided

Figure 7.6: Connection example S400-M4M12-B

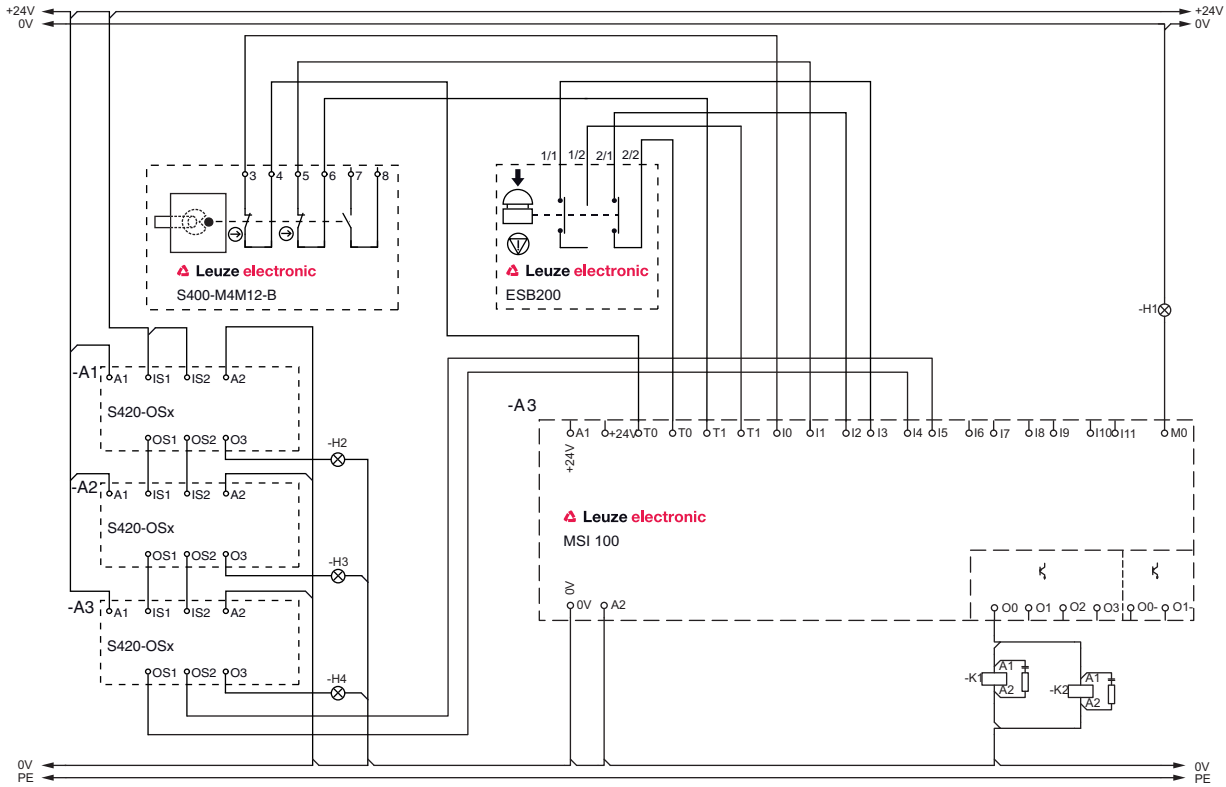

Figure 7.7: Connection example S420-OSx

8 Starting up the device

⚠ WARNING
Improper commissioning may result in serious injury ↳ Commissioning may only be performed by competent and authorized personnel

Prerequisites:

- Safety hinge switch is mounted, adjusted, plugged and connected according to these instructions
- operating personnel have been trained in the correct use

↳ Test the function of the safety hinge switch (see chapter 9 „Testing“).

The safety hinge switch is then ready for use.

9 Testing

⚠ WARNING

Severe accidents may result if tests are not performed properly!

↳ Tests may only be performed by competent and authorized personnel

S400, S410 and S420 safety hinge switches are maintenance-free.

↳ For the testing intervals, observe nationally applicable regulations.

↳ Document all tests in a comprehensible manner.

9.1 To be performed prior to the initial start-up by competent personnel

↳ Check whether the safety hinge switch is operated according to its specified environmental conditions (see chapter 13 „Technical data“).

↳ Test to ensure proper mechanical and electrical function (see chapter 9.2 „To be performed periodically by competent personnel“).

9.2 To be performed periodically by competent personnel

Mechanical function

↳ Stop the dangerous state.

↳ Check that the components are securely fastened.

↳ Test the cable entry for leaks and check that the opening for setting the switching angle is plugged.

↳ Check safety hinge switch and cable entry for damage, deposits, deformation and wear.

↳ Open and close the protective device several times, testing the ease of movement while doing so.

Electrical function

⚠ WARNING

Severe accidents may result if tests are not performed properly!

↳ Make certain that there are no persons in the danger zone.

↳ Stop the dangerous state and open the protective device.

↳ Make certain that the machine cannot be started while the protective door is open.

↳ Close the protective door and start the machine.

↳ Test several times whether the machine stops upon opening of the protective door.

↳ Make certain that the guard cannot be circumvented and that the switching angle is set to a sufficiently small value (EN ISO 13857).

↳ Test whether the dangerous state ends before the point of operation can be reached (EN ISO 13855).

9.3 To be performed daily by the operating personnel

⚠ WARNING

Severe accidents may result if tests are not performed properly!

↳ Make certain that there are no persons in the danger zone.

↳ Stop the dangerous state and open the protective device.

↳ Check the safety hinge switch and cable entry for damage or tampering.

↳ Test the cable entry for leaks and check that the opening for setting the switching angle is plugged with the original plug.

↳ Make certain that the machine cannot be started while the protective device is open.

↳ Close the protective device and start the machine.

↳ Test whether the machine stops upon opening of the protective device.

10 Cleaning

There must be no soiling (e.g moisture and dust), especially at the joints of the safety hinge switch and the area near the sealing plug (switching angle adjustment).

Prerequisites for regular cleaning:

- machine is switched off
- voltage supply to the safety switch is interrupted

↳ Clean the safety hinge switch (e.g. with a vacuum cleaner).

11 Disposing

↳ The nationally valid regulations for electro-mechanical components are to be observed when disposing.

12 Service and support

Telephone number for 24-hour standby service:
+49 (0) 7021 573-0

Service hotline:
+49 (0) 8141 5350-111
Monday to Thursday, 8.00 a.m. to 5.00 p.m. (UTC+1)
Friday, 8.00 a.m. to 4.00 p.m. (UTC +1)

E-mail:
service.protect@leuze.de

Return address for repairs:
Service Center
Leuze electronic GmbH + Co. KG
In der Braike 1
D-73277 Owen / Germany

13 Technical data

Table 13.1: General technical data

Switch type	Interlock device without guard interlocking in accordance with EN 1088
SIL in accordance with IEC 61508:2010	SIL 3
SILCL in accordance with IEC/EN 62061:2005	SILCL 3
Performance Level (PL) in accordance with EN ISO 13849-1:2008	PL e
Category in accordance with EN ISO 13849-1:2008	Cat. 4
Internal actuator	Safety switch in hinge, encapsulated
Max. load	S400-xxx: axial: 1500 N radial: 1000 N torsional: 25 Nm S410-xxx: axial: 750 N radial: 500 N torsional: 12 Nm S420-xxx: axial: 2000 N radial: 2000 N torsional: 50 Nm
Actuation speed	min. 2°/s, max. 90°/s
Actuation angle	max. 180°
Actuating path with forced separation	min. +4° (from switching point) min. +6° (from switching point), (S420-9xx)
Mechanical life time in accordance with EN/ IEC 60947-5-1	10^6 switching cycles
Actuation frequency according to EN/ IEC 60947-5-1	max. 720 per hour max. 600 per hour(S420-xxx)
Service life (T_M) in accordance with EN ISO 13849-1:2008	20 years
Number of cycles before dangerous failure ($B10_d$) according to EN 61810-2	5,000,000
Usage category according to EN/IEC 60947-5-1	AC 15 / DC 13: U_e 24 V, I_e 2 A
Dimensions (dimensional drawings)	see chapter 3 „Device description“

Table 13.2: Safety

Protection class	IP 67, IP 69K
Contact allocation	2NC + 1NO 2NC + 2NO (S420-9xx)
Contact material	silver alloy, solid

Switching principle	S400-M4x: slow-action contact S410-M4x: slow-action contact S400-M1x: snap-action contact S410-M1x: snap-action contact S420-9x: slow-action contact S420-OSx: PNP
Contact opening	Force-fit
Rated insulation voltage	30 V AC, 36 V DC
Conventional thermal current	max. 2 A
Short-circuit protection according to IEC 60269-1	2 A, 500 V, type gG

Table 13.3: Electrical characteristics S420-OSx

Supply voltage U_B	24 V DC, -15 % … +10 %
Switchable load per OSSD, max.	6 W
Power consumption	< 1 W
Rated impulse withstand voltage U_{imp}	1.5 kV
Overvoltage category	III
Inputs IS1/IS2	
Absorbed switching current per input	5 mA
Safe outputs OS1/OS2	
Cutoff voltage U_e	24 V DC
Output type	PNP
Switched current per OSSD, max.	0.25 A
Short-circuit indicator	Yes
Overcurrent protected	Yes
Switch-off test pulses	< 300 µs
Permissible capacitance between two outputs	< 200 nF
Permissible capacitance between outputs and ground	< 200 nF
Signal outputs O3	
Output type	PNP
Max. switched current	0.1 A
Short-circuit indicator	No
Overcurrent protected	Yes

Table 13.4: Housing

Housing material	metal stainless steel, AISI 316L (S420-xxx)
Surface roughness R_a (S420)	< 0,8 µm

Table 13.5: Connection

Number of cable entries	1
Connection type	2 m PVC cable: S400-M4CB2-B S400-M4CB2-T S410-M1CB2-B S410-M1CB2-T S420-9CB2-LW S420-OS-CB2-LW 2 m PUR cable: S400-M4-CB2PUR-W S410-M4-CB2PUR-W M12 plug: S400-M4M12-B S400-M4M12-T S410-M1M12-B S410-M1M12-T 0.2 m PVC cable with M12 plug: S400-M4-CB02M12-W S400-M1-CB02M12-W S410-M4-CB02M12-W S420-9-CB02M12-LW S420-OS-CB02M12-LW
Conductor cross-section (stranded)	S400-M4CB2-B: 7 x 0.5 mm^2 S400-M4CB2-T: 7 x 0.5 mm^2 S410-M1CB2-B: 7 x 0.5 mm^2
Cable routing side	S400-xxx-B: floor-side with left installation S410-xxx-B: floor-side with left installation S400-xxx-T: from above with left installation S410-xxx-T: from above with left installation S400-xxx-W: wall side mounting S410-xxx-W: wall side mounting

Table 13.6: Timing

Reaction time, input signal shutoff, typ.	7 ms
Reaction time, input signal shutoff, max.	12 ms
Reaction time, actuator switching point, typ.	7 ms
Reaction time, actuator switching point, max.	12 ms

Table 13.7: Environment

Temperature range, operation	-25 … +80 °C -25 … +70 °C (S420-OSx)
Dirt level, external, according to EN/IEC 60947-1	3

13.1 Dimensions

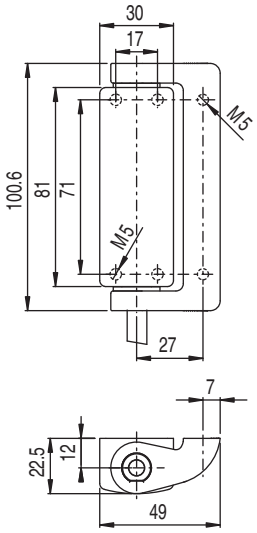

Figure 13.1: Dimensions of S400-M4CB2-B in mm

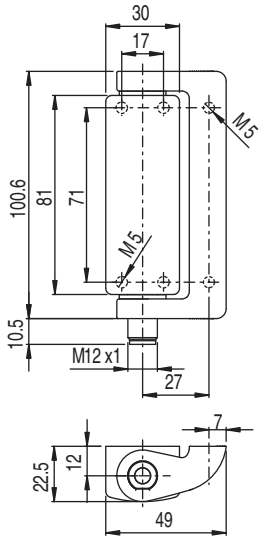

Figure 13.2: Dimensions of S400-M4M12-B in mm

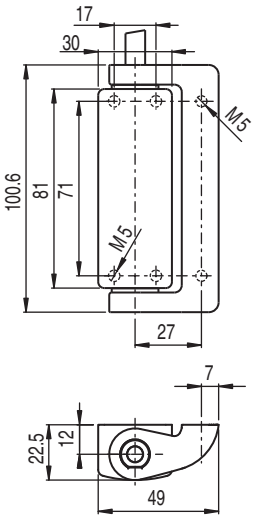

Figure 13.3: Dimensions of S400-M4CB2-T in mm

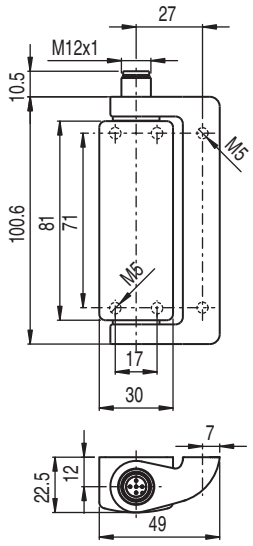

Figure 13.4: Dimensions of S400-M4M12-T in mm

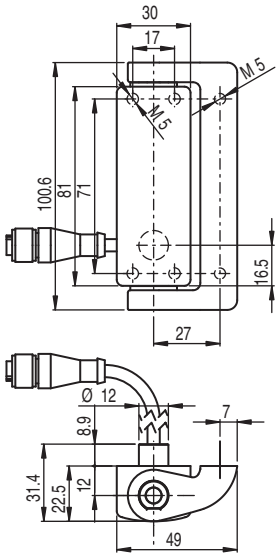

Figure 13.5: Dimensions of S400-Mx-CB02M12-W in mm

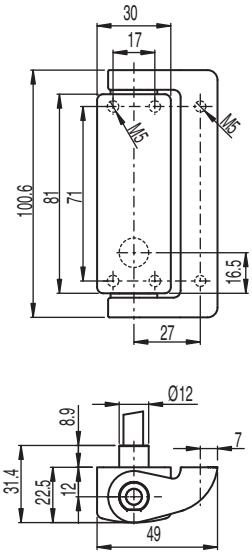

Figure 13.6: Dimensions of S400-M4-CB2PUR-W in mm

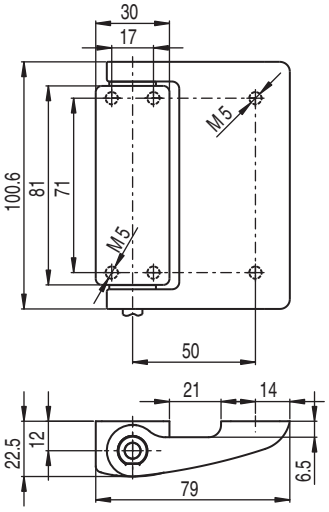

Figure 13.7: Dimensions of S410-M1CB2-B in mm

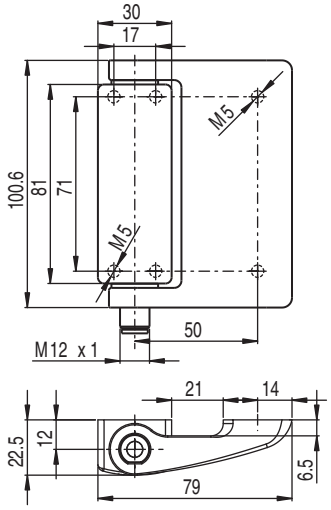

Figure 13.8: Dimensions of S410-M1M12-B in mm

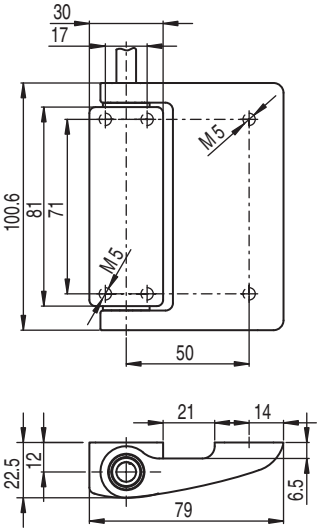

Figure 13.9: Dimensions of S410-M1CB2-T in mm

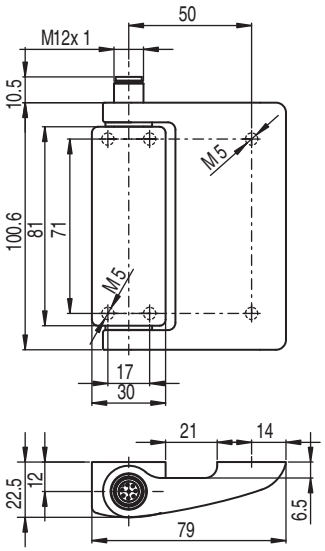

Figure 13.10: Dimensions of S410-M1M12-T in mm

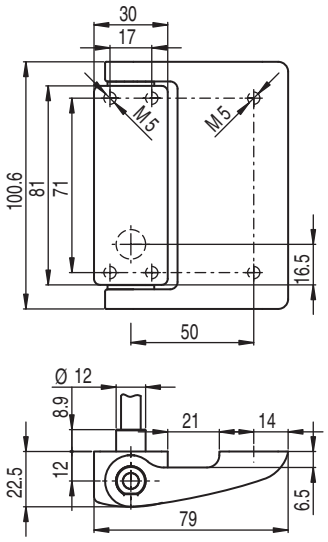

Figure 13.11: Dimensions of S410-M4-CB02M12-W and S410-M4-CB2PUR-W in mm

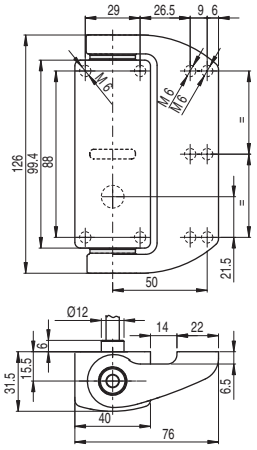

Figure 13.12: Dimensions of S420-9CB2-LW and S420-OS-CB2-LW in mm

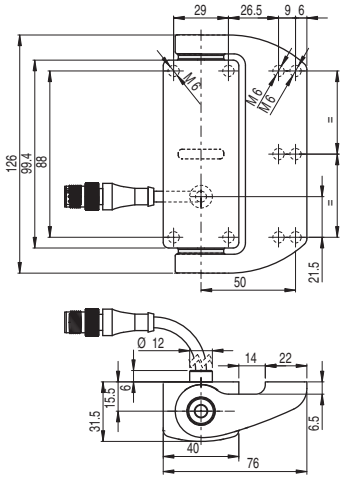

Figure 13.13: Dimensions of S420-9-CB02M12-LW and S420-OS-CB02M12-LW in mm

14 Ordering information and accessories

Table 14.1: S400, S410 and S420 safety hinge switches

Part no.	Article	Description
63000400	S400-M4CB2-B	2 m PVC cable, cable entry at bottom (with left installation)
63000401	S400-M4M12-B	8-pin M12 plug, cable entry at bottom (with left installation)
63000402	S400-M4CB2-T	2 m PVC cable, cable entry at top (with left installation)
63000403	S400-M4M12-T	8-pin M12 plug, cable entry at top (with left installation)
63000406	S400-M4-CB02M12-W	0.2 m PVC cable with 8-pin M12 plug, cable entry at wall side
63000407	S400-M1-CB02M12-W	0.2 m PVC cable with 8-pin M12 plug, cable entry at wall side
63000411	S400-M4-CB2PUR-W	2 m PUR cable, cable entry at wall side
63000404	S410-M1CB2-B	2 m PVC cable, cable entry at bottom (with left installation), total width 79 mm
63000405	S410-M1M12-B	8-pin M12 plug, cable entry at bottom (with left installation), total width 79 mm
63000408	S410-M1CB2-T	2 m PVC cable, cable entry at top (with left installation)
63000409	S410-M1M12-T	8-pin M12 plug, cable entry at top (with left installation)
63000410	S410-M4-CB02M12-W	0.2 m PVC cable with 8-pin M12 plug, cable entry at wall side
63000412	S410-M4-CB2PUR-W	2 m PUR cable, cable entry at wall side
63000420	S420-9CB2-LW	Stainless steel, 2 m PVC cable, cable entry at wall side (with left installation), total width 76 mm
63000421	S420-OS-CB2-LW	Stainless steel, 2 safety-related switching outputs, 2 m PVC cable, cable entry at wall side (with left installation), total width 76 mm
63000422	S420-9-CB02M12-LW	Stainless steel, 0.2 m PVC cable with 8-pin M12 plug, cable entry at wall side (with left installation), total width 76 mm
63000423	S420-OS-CB02M12-LW	Stainless steel, 2 safety-related switching outputs, 0.2 m PVC cable with 8-pin M12 plug, cable entry at wall side (with left installation), total width 76 mm

14.1 Accessories

Table 14.2: Accessories for the safety hinge switches S400, S410 and S420

Article	Part no.	Description
AC-H-S400	63000770	Additional hinge for S400 safety hinge switch
AC-H-S400-S	63000775	Additional hinge, small for the S400 safety hinge switch
AC-MP3-S400	63000771	Mounting plate set, flat, long version, for S400 safety hinge switch
AC-MP1-S400	63000772	Mounting plate set, angled, long version, for S400 safety hinge switch
AC-H-S410	63000773	Additional hinge for S410 safety hinge switch

Article	Part no.	Description
AC-H-S420	63000778	Additional hinge for S420 safety hinge switch
AC-S-S420	63000779	Seal set between S420 safety hinge switch and mounting position
AC-SEPL-S4xx	63000774	Safety plug for safety hinge switch S4xx
CB-M12-5000E-8GF	678060	PUR, 8-pin, 5 m, shielded, M12 coupling, straight, prefabricated on one end
CB-M12-10000E-8GF	678061	PUR, 8-pin, 10 m, shielded, M12 coupling, straight, prefabricated on one end
CB-M12-15000E-8GF	678062	PUR, 8-pin, 15 m, shielded, M12 coupling, straight, prefabricated on one end
CB-M12-25000E-8GF	678063	PUR, 8-pin, 25 m, shielded, M12 coupling, straight, prefabricated on one end

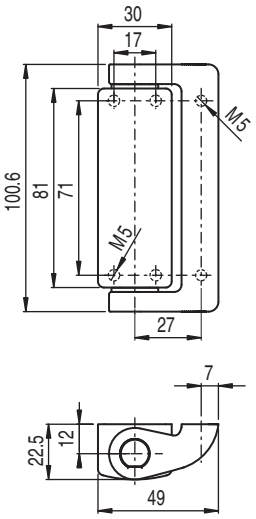

Figure 14.1: Dimensions of AC-H-S400 additional hinge in mm

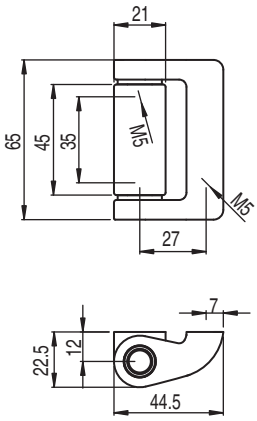

Figure 14.2: Dimensions of AC-H-S400-S additional hinge in mm

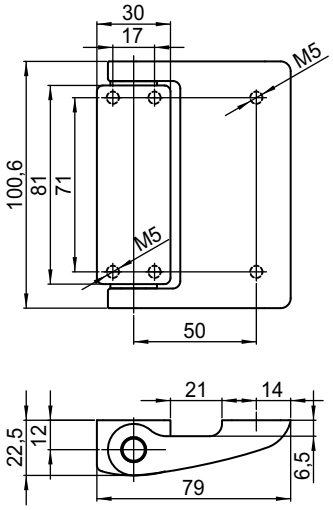

Figure 14.3: Dimensions of AC-H-S410 additional hinge in mm

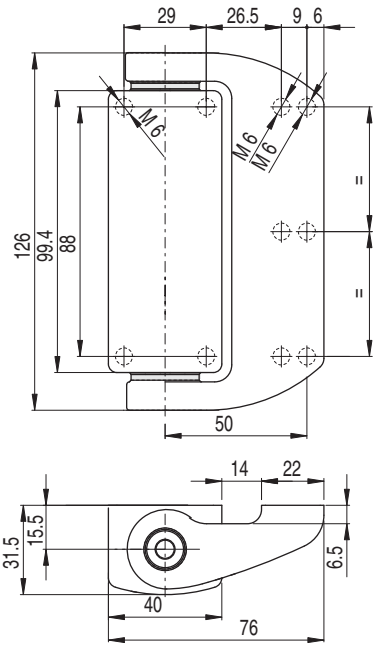

Figure 14.4: Dimensions of AC-H-S420 additional hinge in mm

15 EC Declaration of Conformity

Leuze electronic

the sensor people

EG-KONFORMITÄTS-ERKLÄRUNG (ORIGINAL)	EC DECLARATION OF CONFORMITY (ORIGINAL)	DECLARATION CE DE CONFORMITE (ORIGINAL)
Der Hersteller	The Manufacturer	Le constructeur
	Leuze electronic GmbH + Co. KG In der Braike 1, PO Box 1111 73277 Owen, Germany	
erklärt, dass die nachfolgend aufgeführten Produkte den einschlägigen Anforderungen der genannten EG-Richtlinien und Normen entsprechen.	declares that the following listed products fulfil the relevant provisions of the mentioned EC Directives and standards.	déclare que les produits identifiés suivants sont conformes aux directives CE et normes mentionnées.
Produktbeschreibung:	Description of product:	Description de produit:
Sicherheits-Schalter S20, S200, S300, S400, S410, S420 Sicherheits-Zuhaltung L10, L100, L200 NOT-HALT-Befehlsgerät ERS200 Seriennummer siehe Typschild	Safety Switch S20, S200, S300, S400, S410, S420 Safety Locking Device L10, L100, L200 E-STOP command device ERS200 Serial no. see name plates	Interrupteur de sécurité S20, S200, S300, S400, S410, S420 Interverrouillage de sécurité L10, L100, L200 Appareil de commande d'ARRÊT D'URGENCE ERS200 N° série voir plaques signalétiques
Angewandte EG-Richtlinie(n):	Applied EC Directive(s):	Directive(s) CE appliquées:
2006/42/EG 2004/108/EG 2006/95/EG	2006/42/EC 2004/108/EC 2006/95/EC	2006/42/CE 2004/108/CE 2006/95/CE
Angewandte Normen:	Applied standards:	Normes appliquées:
	EN /IEC 60947-5-1; EN ISO 13849-1; EN 1088	
Benannte Stelle / Baumusterprüfbescheinigung:	Notified Body / Certificate of Type Examination:	Organisme notifié / Attestation d'examen CE de type:
IMQ S.p.A. Istituto Italiano Del Marchio Di Qualitá Via Quintiliano 43 I-20138 Milano	/ CAO2.03747(S20); CAO2.03748 (L100)); CAO2.04212 (L200); CAO2.03749 (S200, S300); CAO2.03756 (S400); CAO2.03749 (ERS200, L10-M); CAO2.03750 (L10-P)	
Bevollmächtigter für die Zusammenstellung der technischen Unterlagen:	Authorized person to compile the technical file:	Personne autorisée à constituer le dossier technique:
	André Thieme; Leuze electronic GmbH + Co. KG Liebigstr. 4; 82256 Fuerstenfeldbruck; Germany	

Owen, 02.07.2014
Datum / Date / Date

Ulrich Balbach, Geschäftsführer / Director / Directeur

Leuze electronic GmbH + Co. KG
In der Braike 1
D-73277 Owen
Telefon +49 (0) 7021 573-0
Telefax +49 (0) 7021 573-199
info@leuze.de
www.leuze.com

Leuze electronic GmbH + Co. KG, Sitz Owen, Registergericht Stuttgart, HRA 230712
Persönlich haftende Gesellschafterin Leuze electronic Geschäftsführungs-GmbH,
Sitz Owen, Registergericht Stuttgart, HRB 230550
Geschäftsführer: Ulrich Balbach
USt.-IdNr. DE 145912521 | Zollnummer 2554232
Es gelten ausschließlich unsere aktuellen Verkaufs- und Lieferbedingungen
Only our current Terms and Conditions of Sale and Delivery shall apply

Nr. 609340-2014/07