# Technical data sheet
# Safety laser scanner
## Part no.: 53800226
## RSL430-M/CU429-10

Figure can vary

**Contents**


- Technical data
- Dimensioned drawings
- Electrical connection
- Operation and display
- Notes
- Accessories




ПРОМЭЛЕКТРОНИКА / sales@prom-elec.com

# Technical data

## Basic data

| | |
|---|---|
| **Series** | RSL 400 |
| **Application** | Mobile danger zone guarding |
| | Mobile side guarding |
| | Stationary access guarding |
| | Stationary danger zone guarding |

## Functions

| | |
|---|---|
| **Functions** | Data output, configurable |
| | Dynamic contactor monitoring (EDM), selectable |
| | E-stop linkage |
| | Four-field mode |
| | Resolution, selectable |
| | Safe time delay, internal |

## Characteristic parameters

| | |
|---|---|
| **Type** | 3, IEC/EN 61496 |
| **SIL** | 2, IEC 61508 |
| **SILCL** | 2, IEC/EN 62061 |
| **Performance Level (PL)** | d, EN ISO 13849-1 |
| **$PFH_D$** | 9E-08 per hour |
| **Mission time $T_M$** | 20 years, EN ISO 13849-1 |
| **Category** | 3, EN ISO 13849 |

## Protective field data

| | |
|---|---|
| **Scanning angle** | 270 ° |
| **Minimum adjustable range** | 50 mm |
| **Number of field pairs, reversible** | 10 + 10 |
| **Number of quads, reversible** | 10 + 10 |
| **Number of protective functions** | 2 Piece(s) |
| **Number of independent sensor configurations** | 2 |
| **Diffuse reflection, min.** | 1.8 % |
| **Operating range** | 0 ... 4.5 m |

## Warning field data

| | |
|---|---|
| **Number of field pairs** | 10 + 10 |
| **Operating range** | 0 ... 20 m |
| **Object size** | 150 mm x 150 mm |
| **Diffuse reflection, min.** | 10 % |

## Optical data

| | |
|---|---|
| **Light source** | Laser, Infrared |
| **Laser light wavelength** | 905 nm |
| **Laser class** | 1, IEC/EN 60825-1:2007 |
| **Transmitted-signal shape** | Pulsed |
| **Repetition frequency** | 90 kHz |

## Measurement data

| | |
|---|---|
| **Distance resolution** | 1 mm |
| **Detection range** | 0 ... 50 m |
| **Diffuse reflection** | 20 % |
| **Angular resolution** | 0.1 ° |

## Electrical data

| | |
|---|---|
| **Protective circuit** | Overvoltage protection |

### Performance data

| | |
|---|---|
| **Supply voltage $U_B$** | 24 V, DC, -30 ... 20 % |
| **Current consumption (without load), max.** | 700 mA, (use power supply unit with 3 A) |
| **Power consumption, max.** | 17 W, For 24 V, plus output load |

### Outputs

| | |
|---|---|
| **Number of safety-related switching outputs (OSSDs)** | 4 Piece(s) |

#### Safety-related switching outputs

| | |
|---|---|
| **Type** | Safety-related switching output OSSD |
| **Switching voltage high, min.** | 20.8 V |
| **Switching voltage low, max.** | 2 V |
| **Voltage type** | DC |

##### Safety-related switching output 1

| | |
|---|---|
| **Assignment** | Connection 1, gray wire |
| **Switching element** | Transistor, PNP |

##### Safety-related switching output 2

| | |
|---|---|
| **Assignment** | Connection 1, pink wire |
| **Switching element** | Transistor, PNP |

##### Safety-related switching output 3

| | |
|---|---|
| **Assignment** | Connection 1, yellow/gray wire |
| **Switching element** | Transistor, PNP |

##### Safety-related switching output 4

| | |
|---|---|
| **Assignment** | Connection 1, pink/green wire |
| **Switching element** | Transistor, PNP |

## Service interface

| | |
|---|---|
| **Type** | Bluetooth, USB |

### Bluetooth

| | |
|---|---|
| **Function** | Configuration/parametering |
| **Frequency band** | 2,400 ... 2,483.5 MHz |
| **Radiated transmitting power** | Max. 4.5 dBm (2.82 mW), class 2 |

### USB

| | |
|---|---|
| **Function** | Configuration/parametering |
| **Connection** | USB 2.0 mini-B, socket |
| **Transmission speed, max.** | 12 Mbit/s |
| **Cable length** | ≤ 5m<br>Longer cable lengths are possible using active cables. |

## Connection

| | |
|---|---|
| **Number of connections** | 2 Piece(s) |

### Connection 1

| | |
|---|---|
| **Function** | Machine interface |
| **Type of connection** | Cable |
| **Cable length** | 10,000 mm |
| **Sheathing material** | PVC |
| **Cable color** | Black |
| **Number of conductors** | 29 -wire |
| **Wire cross section supply** | 1 mm² |
| **Wire cross section signals** | 0.14 mm² |

# Technical data

### Connection 2

| | |
|---|---|
| **Function** | Data interface |
| **Type of connection** | Connector |
| **Thread size** | M12 |
| **Type** | Female |
| **Material** | Metal |
| **No. of pins** | 4 -pin |
| **Encoding** | D-coded |

### Cable properties

| | |
|---|---|
| **Cable resistance, max.** | 15 Ω |

## Mechanical data

| | |
|---|---|
| **Dimension (W x H x L)** | 140 mm x 149 mm x 140 mm |
| **Housing material** | Metal |
| | Plastic |
| **Metal housing** | Diecast zinc |
| **Lens cover material** | Plastic/PC |
| **Net weight** | 3,000 g |
| **Housing color** | Yellow, RAL 1021 |
| **Type of fastening** | Mounting plate |
| | Through-hole mounting |
| | Via optional mounting device |

## Operation and display

| | |
|---|---|
| **Type of display** | Alphanumerical display |
| | LED indicator |
| **Number of LEDs** | 6 Piece(s) |
| **Type of configuration** | Software Sensor Studio |
| **Operational controls** | Software Sensor Studio |

## Environmental data

| | |
|---|---|
| **Ambient temperature, operation** | 0 ... 50 °C |
| **Ambient temperature, storage** | -20 ... 60 °C |
| **Relative humidity (non-condensing)** | 15 ... 95 % |

## Certifications

| | |
|---|---|
| **Degree of protection** | IP 65 |
| **Protection class** | III, EN 61140 |
| **Certifications** | c TÜV Süd US |
| | c UL US |
| | TÜV Süd |
| **Test procedure for EMC in accordance with standard** | DIN 40839-1/3 |
| | EN 61496-1 |
| **Test procedure for oscillation in accordance with standard** | EN 60068-2-6 |
| **Test procedure for continuous shock in accordance with standard** | IEC 60068-2-29 |
| **US patents** | US 10,304,307B |
| | US 7,656,917 B |
| | US 7,696,468 B |
| | US 8,520,221 B |

## Classification

| | |
|---|---|
| **Customs tariff number** | 85365019 |
| **eCl@ss 5.1.4** | 27272705 |
| **eCl@ss 8.0** | 27272705 |
| **eCl@ss 9.0** | 27272705 |
| **eCl@ss 10.0** | 27272705 |
| **eCl@ss 11.0** | 27272705 |
| **ETIM 5.0** | EC002550 |
| **ETIM 6.0** | EC002550 |
| **ETIM 7.0** | EC002550 |

# Dimensioned drawings

All dimensions in millimeters

## Dimensions safety laser scanner with connection unit

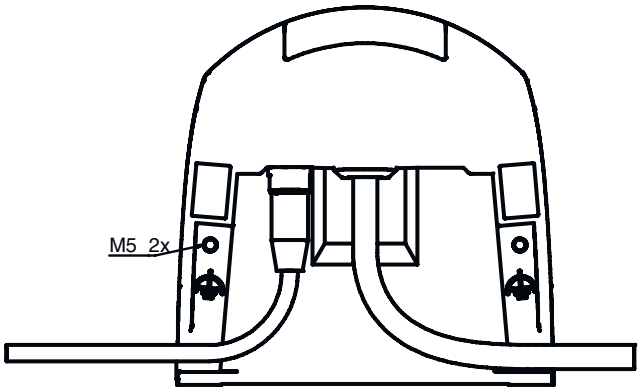


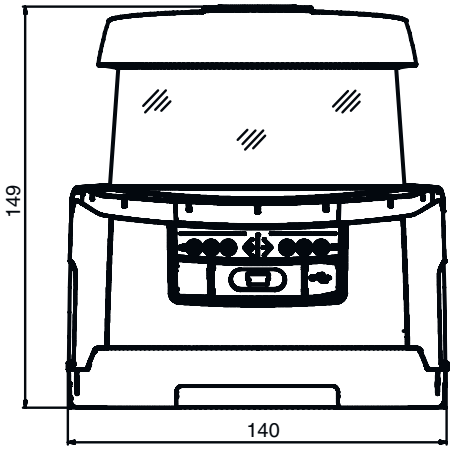


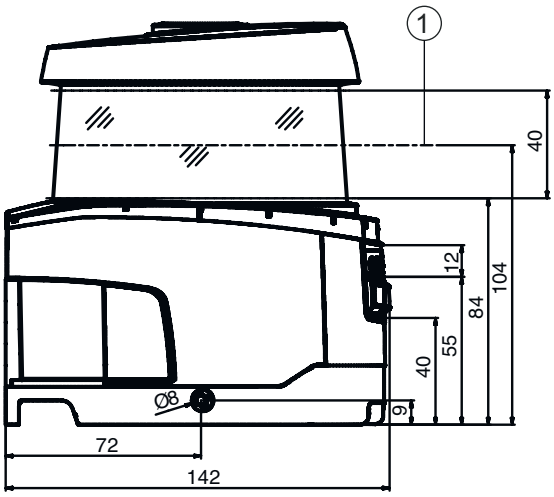


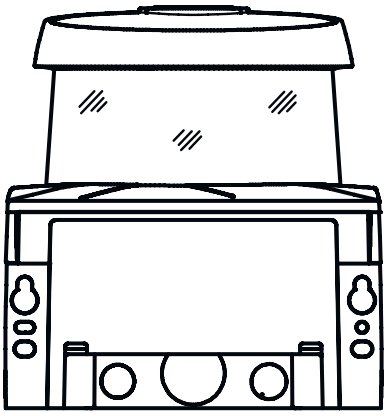

1 Scan level

# Dimensioned drawings

Mounting dimensions safety laser scanner with connection unit

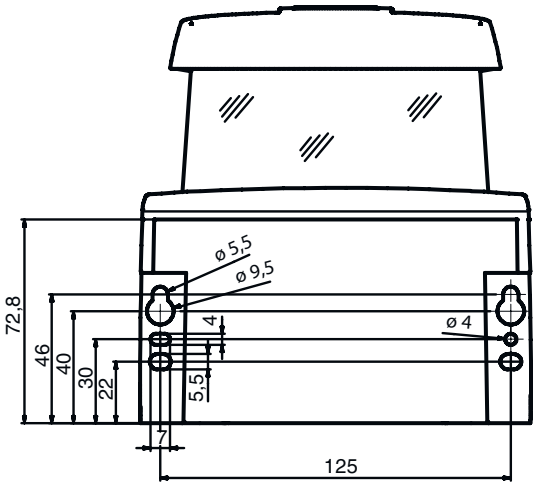


Minimum space requirements for installation and replacement of scanner unit

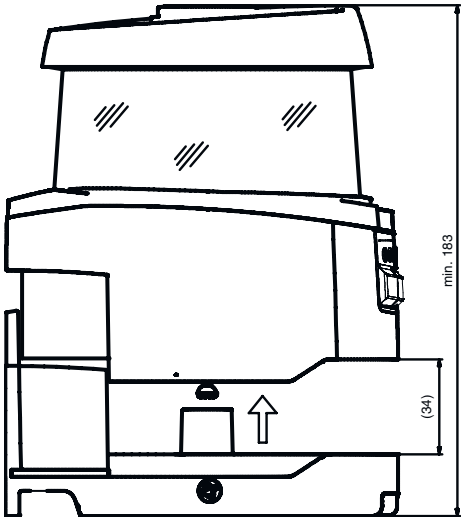

# Dimensioned drawings

Leuze

## Minimum space requirements for installation and replacement of scanner unit

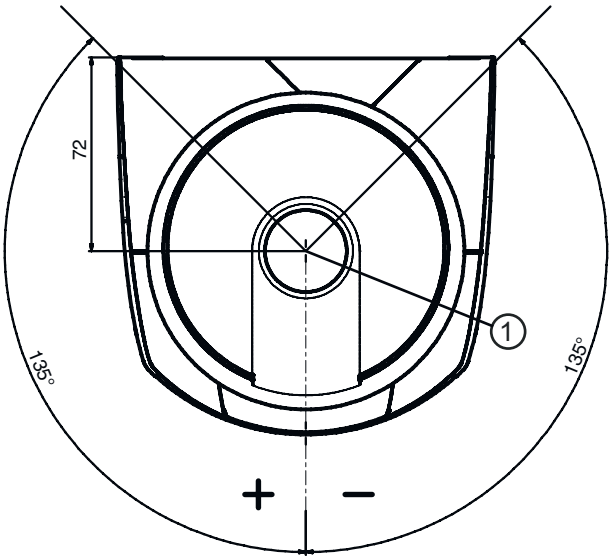


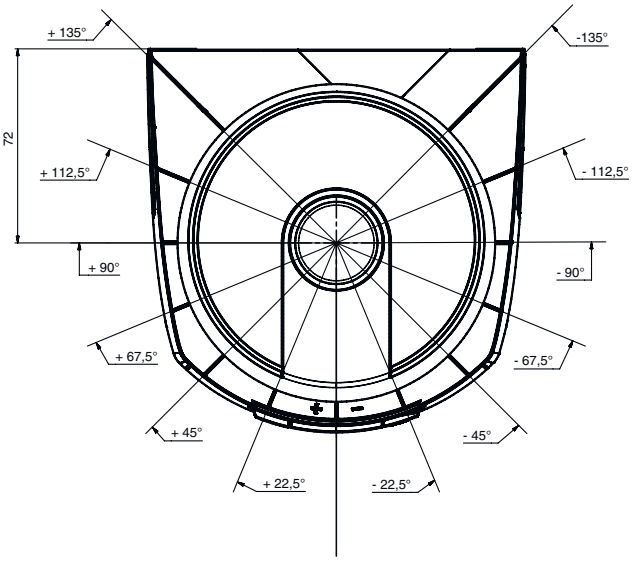


1 Reference point for distance measurement and protective field radius

# Electrical connection

### Connection 1

| | |
|---|---|
| **Function** | Machine interface |
| **Type of connection** | Cable |
| **Cable length** | 10,000 mm |
| **Sheathing material** | PVC |
| **Cable color** | Black |
| **Number of conductors** | 29 -wire |
| **Wire cross section supply** | 1 mm² |
| **Wire cross section signals** | 0.14 mm² |

| Conductor color | Conductor assignment |
|---|---|
| **White** | RES1 |
| **Brown** | +24V |
| **Green** | EA1 |
| **Yellow** | A1 |
| **Gray** | OSSDA1 |
| **Pink** | OSSDA2 |
| **Blue** | GND / Ground |
| **Red** | MELD |
| **Black** | F1 |
| **Violet** | F2 |
| **GrayPink** | F3 |
| **BlueRed** | F4 |
| **GreenWhite** | F5 |
| **BrownGreen** | SE1 |
| **WhiteYellow** | SE2 |
| **BrownYellow** | A2 |
| **GrayWhite** | A3 |
| **BrownGray** | A4 |
| **PinkWhite** | EA2 |
| **BrownPink** | EA3 |

# Electrical connection

| Conductor color | Conductor assignment |
|---|---|
| **BlueWhite** | EA4 |
| **BlueBrown** | F6 |
| **RedWhite** | F7 |
| **BrownRed** | F8 |
| **BlackWhite** | F9 |
| **BlackBrown** | F10 |
| **GrayGreen** | RES2 |
| **GrayYellow** | OSSDB1 |
| **GreenPink** | OSSDB2 |

## Connection 2

| | |
|---|---|
| **Function** | Data interface |
| **Type of connection** | Connector |
| **Thread size** | M12 |
| **Type** | Female |
| **Material** | Metal |
| **No. of pins** | 4 -pin |
| **Encoding** | D-coded |
| **Connector housing** | FE/SHIELD |

| Pin | Pin assignment | Conductor color |
|---|---|---|
| **1** | TD+ | Yellow |
| **2** | RD+ | White |
| **3** | TD- | Orange |
| **4** | RD- | Blue |
| **5** | | |

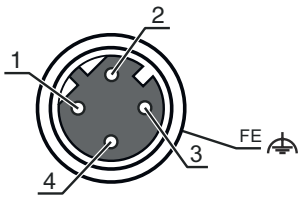


# Operation and display

| LED | Display | Meaning |
|---|---|---|
| **1** | Off | Device switched off |
| | Red, continuous light | OSSD off |
| | Red, flashing | Error |
| | Green, continuous light | OSSD on |
| **2** | Off | RES deactivated or RES activated and released |
| | Yellow, flashing | Protective field occupied |
| | Yellow, continuous light | RES activated and blocked but ready to be unlocked - protective field free and linked sensor is enabled if applicable |
| **3** | Off | Free warning field |
| | Blue, continuous light | Warning field interrupted |
| **4** | Off | Free warning field |
| | Blue, continuous light | Warning field interrupted |
| **5** | Off | RES deactivated or RES activated and released |
| | Yellow, flashing | Protective field occupied |
| | Yellow, continuous light | RES activated and blocked but ready to be unlocked - protective field free and linked sensor is enabled if applicable |
| **6** | Off | Device switched off |
| | Red, continuous light | OSSD off |
| | Red, flashing | Error |
| | Green, continuous light | OSSD on |

# Notes

Leuze

**Observe intended use!**

- The product may only be put into operation by competent persons.
- Only use the product in accordance with its intended use.

**WARNING! INVISIBLE LASER RADIATION – CLASS 1 LASER PRODUCT**

The device satisfies the requirements of IEC 60825-1:2014 (EN 60825-1:2014) safety regulations for a product of **laser class 1 as well as the U.S. 21 CFR 1040.10 regulations with deviations corresponding to "Laser Notice No. 56" from May 8, 2019.**

- Observe the applicable statutory and local laser protection regulations.
- The device must not be tampered with and must not be changed in any way.
  There are no user-serviceable parts inside the device.
  Repairs must only be performed by Leuze electronic GmbH + Co. KG.

# Accessories

## Connection technology - Interconnection cables

| | Part no. | Designation | Article | Description |
|---|---|---|---|---|
| 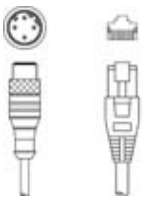 | 50135081 | KSS ET-M12-4A-RJ45-A-P7-050 | Interconnection cable | Suitable for interface: Ethernet<br>Connection 1: Connector, M12, Axial, Male, D-coded, 4 -pin<br>Connection 2: RJ45<br>Shielded: Yes<br>Cable length: 5,000 mm<br>Sheathing material: PUR |
| 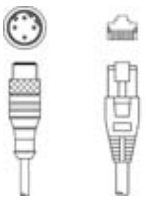 | 50135082 | KSS ET-M12-4A-RJ45-A-P7-100 | Interconnection cable | Suitable for interface: Ethernet<br>Connection 1: Connector, M12, Axial, Male, D-coded, 4 -pin<br>Connection 2: RJ45<br>Shielded: Yes<br>Cable length: 10,000 mm<br>Sheathing material: PUR |
| 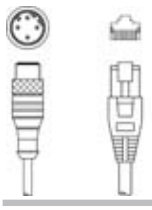 | 50135083 | KSS ET-M12-4A-RJ45-A-P7-150 | Interconnection cable | Suitable for interface: Ethernet<br>Connection 1: Connector, M12, Axial, Male, D-coded, 4 -pin<br>Connection 2: RJ45<br>Shielded: Yes<br>Cable length: 15,000 mm<br>Sheathing material: PUR |

## Mounting technology - Mounting brackets

| | Part no. | Designation | Article | Description |
|---|---|---|---|---|
| | 53800134 | BT840M | Mounting bracket | Application: Mounting on chamfered 90° corner<br>Dimensions: 84.9 mm x 72 mm x 205.2 mm<br>Color: Yellow, RAL 1021<br>Type of fastening, at system: Through-hole mounting<br>Type of fastening, at device: Screw type<br>Material: Metal |

# Accessories

| | Part no. | Designation | Article | Description |
|---|---|---|---|---|
| | 53800132 | BTF815M | Mounting bracket | Application: Mounting bracket for floor mounting<br>Dimensions: 186 mm x 120 mm x 288 mm<br>Scan level height: 150 mm<br>Color: Yellow, RAL 1021<br>Type of fastening, at system: Through-hole mounting<br>Type of fastening, at device: Screw type<br>Material: Metal |
| | 53800133 | BTF830M | Mounting bracket | Application: Mounting bracket for floor mounting<br>Dimensions: 186 mm x 275 mm x 288 mm<br>Scan level height: 300 mm<br>Color: Yellow, RAL 1021<br>Type of fastening, at system: Through-hole mounting<br>Type of fastening, at device: Screw type<br>Material: Metal |

## Mounting

| | Part no. | Designation | Article | Description |
|---|---|---|---|---|
| | 53800131 | BTP800M | Loop guard | Dimensions: 160 mm x 169 mm<br>Color: Black<br>Material: Metal |

## General

| | Part no. | Designation | Article | Description |
|---|---|---|---|---|
| | 430400 | RS4-clean-Set1 | Cleaning set | Number of cleaning cloths: 40 Piece(s)<br>Content of cleaning fluid: 150 ml |

## Services

| | Part no. | Designation | Article | Description |
|---|---|---|---|---|
| | S981051 | CS40-I-141 | Safety inspection "Safety laser scanners" | Details: Checking of a safety laser scanner application in accordance with current standards and guidelines. Inclusion of the device and machine data in a database, production of a test log per application.<br>Conditions: It must be possible to stop the machine, support provided by customer's employees and access to the machine for Leuze employees must be ensured.<br>Restrictions: Travel costs and accommodation expenses charged separately and according to expenditure. |
| 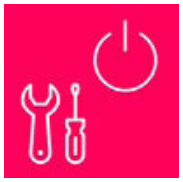 | S981047 | CS40-S-141 | Start-up support | Details: For safety devices including stopping time measurement and initial inspection.<br>Conditions: Devices and connection cables are already mounted, price not including travel costs and, if applicable, accommodation expenses.<br>Restrictions: Max. 3 h., no mechanical (mounting) and electrical (wiring) work performed, no changes (attachments, wiring, programming) to third-party components in the nearby environment. |

# Accessories

ПРОМЭЛЕКТРОНИКА / sales@prom-elec.com

| Note |
| --- |
| A list with all available accessories can be found on the Leuze website in the Download tab of the article detailed page. |