# Technical data sheet
# Safety light curtain transmitter

Part no.: 68008101

MLC502T14-150

Figure can vary

**Contents**


- Technical data
- Dimensioned drawings
- Electrical connection
- Circuit diagrams
- Operation and display
- Suitable receivers
- Part number code
- Notes
- Accessories




ПРОМЭЛЕКТРОНИКА / sales@prom-elec.com

# Technical data

## Basic data

| | |
|---|---|
| **Series** | MLC 500 |
| **Device type** | Transmitter |
| **Contains** | 2x BT-NC sliding block |
| **Application** | Finger protection |

## Functions

| | |
|---|---|
| **Functions** | Test signal input |
| | Transmission channel changeover |

## Characteristic parameters

| | |
|---|---|
| **Type** | 4, IEC/EN 61496 |
| **SIL** | 3, IEC 61508 |
| **SILCL** | 3, IEC/EN 62061 |
| **Mission time $T_M$** | 20 years, EN ISO 13849-1 |

## Protective field data

| | |
|---|---|
| **Resolution** | 14 mm |
| **Protective field height** | 150 mm |
| **Operating range** | 0 ... 6 m |

## Optical data

| | |
|---|---|
| **Synchronization** | Optical between transmitter and receiver |
| **Light source** | LED, Infrared |
| **LED light wavelength** | 940 nm |
| **Transmitted-signal shape** | Pulsed |
| **LED risk group** | Exempt group (in acc. with EN 62471:2008) |

## Electrical data

| | |
|---|---|
| **Protective circuit** | Overvoltage protection |
| | Short circuit protected |

### Performance data

| | |
|---|---|
| **Supply voltage $U_B$** | 24 V, DC, -20 ... 20 % |
| **Current consumption, max.** | 50 mA |
| **Fuse** | 2 A semi time-lag |

### Inputs

| | |
|---|---|
| **Number of digital switching inputs** | 1 Piece(s) |

#### Switching inputs

| | |
|---|---|
| **Type** | Digital switching input |
| **Switching voltage high, min.** | 18 V |
| **Switching voltage low, max.** | 2.5 V |
| **Switching voltage, typ.** | 22.5 V |
| **Voltage type** | DC |

## Connection

| | |
|---|---|
| **Number of connections** | 1 Piece(s) |

### Connection 1

| | |
|---|---|
| **Function** | Machine interface |
| **Type of connection** | Connector |
| **Thread size** | M12 |
| **Material** | Metal |
| **No. of pins** | 5 -pin |

### Cable properties

| | |
|---|---|
| **Permissible conductor cross section, typ.** | 0.25 mm² |
| **Length of connection cable, max.** | 100 m |
| **Permissible cable resistance to load, max.** | 200 Ω |

## Mechanical data

| | |
|---|---|
| **Dimension (W x H x L)** | 29 mm x 216 mm x 35.4 mm |
| **Housing material** | Metal |
| **Metal housing** | Aluminum |
| **Lens cover material** | Plastic / PMMA |
| **Material of end caps** | Diecast zinc |
| **Net weight** | 300 g |
| **Housing color** | Yellow, RAL 1021 |
| **Type of fastening** | Groove mounting |
| | Mounting bracket |
| | Mounting on Device Column |
| | Swivel mount |

## Operation and display

| | |
|---|---|
| **Type of display** | LED |
| **Number of LEDs** | 2 Piece(s) |

## Environmental data

| | |
|---|---|
| **Ambient temperature, operation** | -30 ... 55 °C |
| **Ambient temperature, storage** | -30 ... 70 °C |
| **Relative humidity (non-condensing)** | 0 ... 95 % |

## Certifications

| | |
|---|---|
| **Degree of protection** | IP 65 |
| **Protection class** | III |
| **Certifications** | c CSA US |
| | c TÜV NRTL US |
| | TÜV Süd |
| **Vibration resistance** | 50 m/s² |
| **Shock resistance** | 100 m/s² |
| **US patents** | US 6,418,546 B |

## Classification

| | |
|---|---|
| **Customs tariff number** | 85365019 |
| **eCl@ss 5.1.4** | 27272704 |
| **eCl@ss 8.0** | 27272704 |
| **eCl@ss 9.0** | 27272704 |
| **eCl@ss 10.0** | 27272704 |
| **eCl@ss 11.0** | 27272704 |
| **ETIM 5.0** | EC002549 |
| **ETIM 6.0** | EC002549 |
| **ETIM 7.0** | EC002549 |

# Dimensioned drawings

All dimensions in millimeters

## Calculation of the effective protective field height $H_{PFE} = H_{PFN} + B + C$

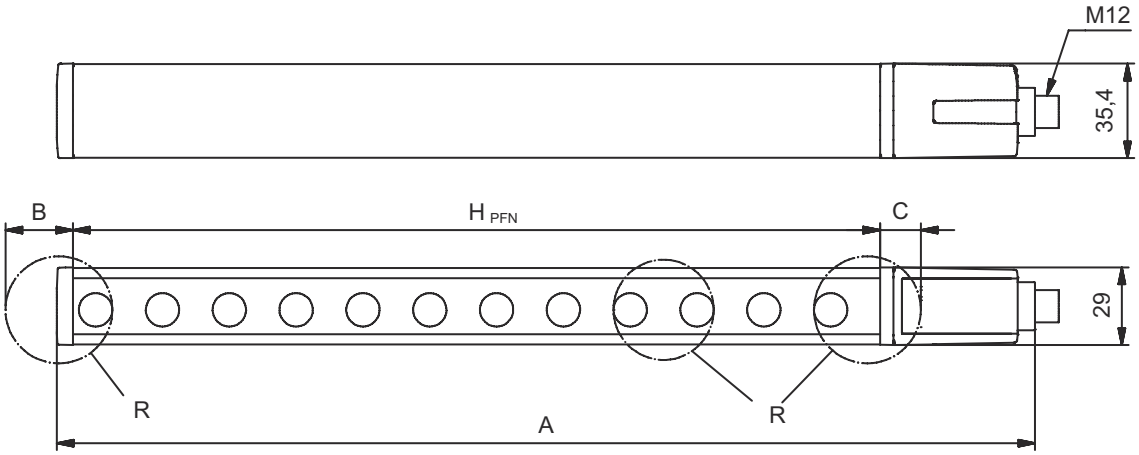


| | | | |
|---|---|---|---|
| $H_{PFE}$ | Effective protective field height = 162 mm | C | 6 mm |
| $H_{PFN}$ | Nominal protective field height = 150 mm | R | Effective protective field height $H_{PFE}$ goes beyond the dimensions of the optics area to the outer borders of the circles labeled with R. |
| A | Total height = 216 mm | | |
| B | 6 mm | | |

# Electrical connection

## Connection 1

| | |
|---|---|
| **Function** | Machine interface |
| **Type of connection** | Connector |
| **Thread size** | M12 |
| **Type** | Male |
| **Material** | Metal |
| **No. of pins** | 5 -pin |
| **Encoding** | A-coded |
| **Connector housing** | FE/SHIELD |

| Pin | Pin assignment | Conductor color |
|---|---|---|
| **1** | VIN1 | Brown |
| **2** | RNG - range, 24 V reduced range, 0 V standard range | White |
| **3** | VIN2 | Blue |
| **4** | Test in | Black |
| **5** | FE/SHIELD | Gray |

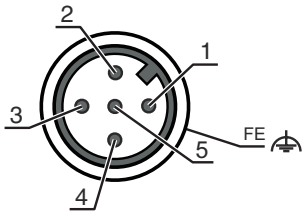

# Circuit diagrams

## Transmission channel C1, OSSDs deactivated on the receiver

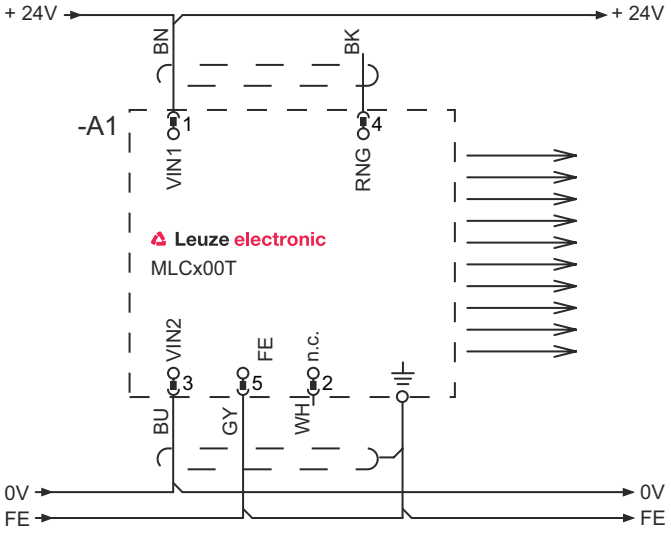


1 VIN1 = +24 V
3 VIN2 = 0 V
4 RNG = 0 V or open

## Transmission channel C1, OSSDs activated on the receiver

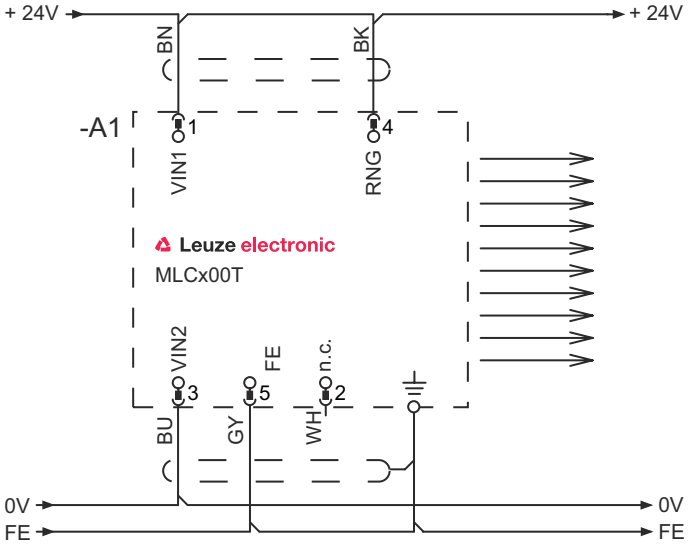


1 VIN1 = +24 V
3 VIN2 = 0 V
4 RNG = +24 V

# Circuit diagrams

## Transmission channel C2, OSSDs deactivated on the receiver

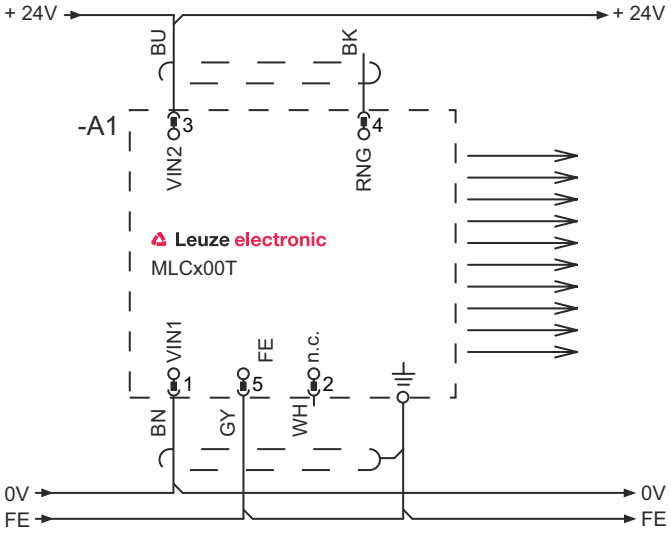


1 VIN1 = 0 V
3 VIN2 = +24 V
4 RNG = 0 V or open

## Transmission channel C2, OSSDs activated on the receiver

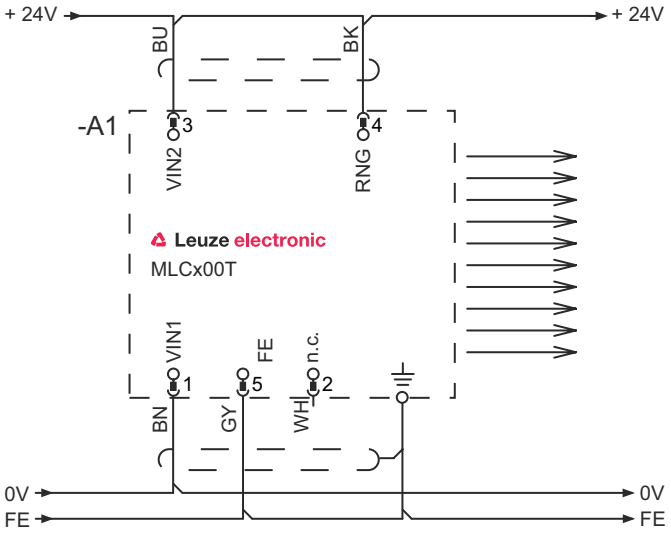


1 VIN1 = 0 V
3 VIN2 = +24 V
4 RNG = +24 V

# Operation and display

| LED | Display | Meaning |
|---|---|---|
| **1** | Off | Device switched off |
| | Red, continuous light | Device error |
| | Green, continuous light | Normal operation |
| **2** | Green, flashing, 10 s long after switching on | Test input activated |
| | Off | Transmission channel C1 |
| | Green, continuous light | Transmission channel C2 |

# Suitable receivers

| | Part no. | Designation | Article | Description |
|---|---|---|---|---|
| | 68001101 | MLC510R14-150 | Safety light curtain receiver | Resolution: 14 mm<br>Protective field height: 150 mm<br>Response time: 5 ms<br>Connection: Connector, M12, Metal, 5 -pin<br>Function package: Basic |

# Part number code

Part designation: **MLCxyy-za-hhhhei-ooo**

| MLC | Safety light curtain |
|---|---|
| **x** | **Series**<br>3: MLC 300<br>5: MLC 500 |
| **yy** | **Function classes**<br>00: transmitter<br>01: transmitter (AIDA)<br>02: transmitter with test input<br>10: basic receiver - automatic restart<br>11: basic receiver - automatic restart (AIDA)<br>20: standard receiver - EDM/RES selectable<br>30: extended receiver - blanking/muting |
| **z** | **Device type**<br>T: transmitter<br>R: receiver |
| **a** | **Resolution**<br>14: 14 mm<br>20: 20 mm<br>30: 30 mm<br>40: 40 mm<br>90: 90 mm |
| **hhhh** | **Protective field height**<br>150 … 3000: from 150 mm to 3000 mm |
| **e** | **Host/Guest (optional)**<br>H: Host<br>MG: Middle Guest<br>G: Guest |
| **i** | **Interface (optional)**<br>/A: AS-i |
| **ooo** | **Option**<br>/V: high Vibration-proof<br>EX2: explosion protection (zones 2 + 22)<br>SPG: Smart Process Gating |

**Note**

- A list with all available device types can be found on the Leuze website at www.leuze.com.

# Notes

**Observe intended use!**

- The product may only be put into operation by competent persons.
- Only use the product in accordance with its intended use.

# Accessories

## Connection technology - Connection cables

| | Part no. | Designation | Article | Description |
|---|---|---|---|---|
| | 50133860 | KD S-M12-5A-P1-050 | Connection cable | Connection 1: Connector, M12, Axial, Female, A-coded, 5 -pin<br>Connection 2: Open end<br>Shielded: Yes<br>Cable length: 5,000 mm<br>Sheathing material: PUR |

## Mounting technology - Swivel mounts

| | Part no. | Designation | Article | Description |
|---|---|---|---|---|
| | 429393 | BT-2HF | Mounting bracket set | Fastening, at system: Through-hole mounting<br>Mounting bracket, at device: Clampable<br>Type of mounting device: Turning, 360°<br>Material: Metal, Plastic |

## Alignment aids

| | Part no. | Designation | Article | Description |
|---|---|---|---|---|
| | 520101 | AC-ALM-M | Alignment aid | Housing material: Plastic |

## Services

| | Part no. | Designation | Article | Description |
|---|---|---|---|---|
| | S981050 | CS40-I-140 | Safety inspection "Safety light barriers" | Details: Checking of a safety light barrier application in accordance with current standards and guidelines. Inclusion of the device and machine data in a database, production of a test log per application.<br>Conditions: It must be possible to stop the machine, support provided by customer's employees and access to the machine for Leuze employees must be ensured.<br>Restrictions: Travel costs and accommodation expenses charged separately and according to expenditure. |
| 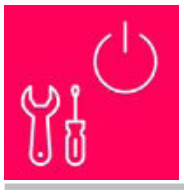 | S981046 | CS40-S-140 | Start-up support | Details: For safety devices including stopping time measurement and initial inspection.<br>Conditions: Devices and connection cables are already mounted, price not including travel costs and, if applicable, accommodation expenses.<br>Restrictions: Max. 2 h., no mechanical (mounting) and electrical (wiring) work performed, no changes (attachments, wiring, programming) to third-party components in the nearby environment. |

| Note | |
|---|---|
| | ✎ A list with all available accessories can be found on the Leuze website in the Download tab of the article detailed page. |