SMART
SENSOR
BUSINESS

Leuze electronic

the sensor people

MLC 530 SPG
Safety Light Curtains

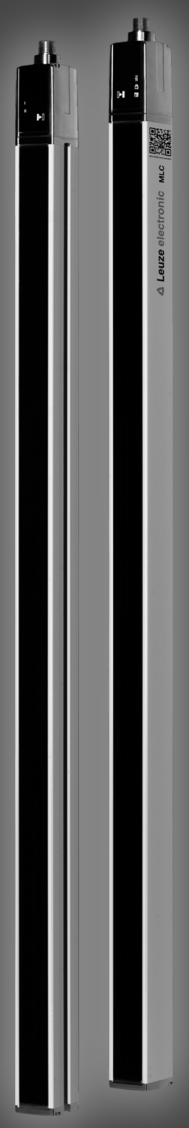

EN 2019/03/11 - 50132717
We reserve the right to make technical changes

SAFE IMPLEMENTATION AND OPERATION
Original operating instructions

ПРОМЭЛЕКТРОНИКА / sales@prom-elec.com

© 2019
Leuze electronic GmbH & Co. KG
In der Braike 1
D-73277 Owen / Germany
Phone: +49 7021 573-0
Fax: +49 7021 573-199
http://www.leuze.com
info@leuze.com

1 About this document ... 6

1.1 Used symbols and signal words ... 6

1.2 Checklists ... 7

2 Safety ... 8

2.1 Intended use and foreseeable misuse ... 8

2.1.1 Intended use ... 8

2.1.2 Foreseeable misuse ... 9

2.2 Necessary competencies ... 9

2.3 Responsibility for safety ... 11

2.4 Disclaimer ... 11

3 Device description ... 12

3.1 Device overview of the MLC family ... 12

3.2 Connection technology ... 14

3.3 Display elements ... 14

3.3.1 Operating indicators on the MLC 500 transmitter ... 14

3.3.2 Operating indicators on the MLC 530 SPG receiver ... 15

3.3.3 Alignment display ... 17

4 Smart Process Gating ... 18

4.1 Overview and principle ... 18

4.2 SPG requirements ... 21

4.3 SPG checklist for programmers ... 23

4.4 SPG operating modes ... 24

4.4.1 Operating mode 1 - Qualified stop ... 25

4.4.2 Operating mode 5 - Standard ... 27

4.4.3 Operating mode 6 - Partial gating ... 28

4.5 Operating-mode-independent SPG functions ... 31

4.5.1 Controlled gating end ... 31

4.5.2 Gating timeout extension ... 33

4.5.3 Gating sequence reset ... 34

4.5.4 Gating restart ... 35

4.5.5 Override ... 36

5 Functions ... 37

5.1 Start/restart interlock RES ... 37

5.2 Transmission channel changeover ... 38

5.3 Operating range selection ... 38

5.4 Signal output ... 38

5.5 Blanking ... 39

6 Applications ... 42

6.1 Access guarding with SPG ... 42

6.1.1 Transport out of a danger zone ... 43

6.1.2 Inward transport of pallets ... 45

ПРОМЭЛЕКТРОНИКА / sales@prom-elec.com

7 Mounting ... 50
7.1 Arrangement of transmitter and receiver ... 50
7.1.1 Calculation of safety distance S ... 50
7.1.2 Calculation of safety distance if protective fields act orthogonally to the approach direction ... 51
7.1.3 Calculation of safety distance S for parallel approach to the protective field ... 56
7.1.4 Minimum distance to reflective surfaces ... 57
7.1.5 Resolution and safety distance during fixed blanking ... 58
7.1.6 Preventing mutual interference between adjacent devices ... 59
7.2 Mounting the safety sensor ... 60
7.2.1 Suitable mounting locations ... 61
7.2.2 Definition of directions of movement ... 62
7.2.3 Fastening via BT-NC60 sliding blocks ... 62
7.2.4 Fastening via BT-2HF swivel mount ... 63
7.2.5 Fastening via BT-2SB10 swiveling mounting brackets ... 63
7.2.6 One-sided mounting on the machine table ... 64

8 Electrical connection ... 65
8.1 Pin assignment transmitter and receiver ... 66
8.1.1 MLC 500 transmitter ... 66
8.1.2 MLC 530 SPG receiver ... 68
8.2 Operating mode 1 ... 68
8.3 Operating mode 5 ... 69
8.4 Operating mode 6 ... 71

9 Starting up the device ... 73
9.1 Switching on ... 73
9.2 Aligning the sensor ... 73
9.3 Acknowledgement button ... 74
9.3.1 Unlocking start/restart interlock ... 74
9.3.2 Gating restart and override ... 75
9.4 Teaching of fixed blanking areas ... 76

10 Testing ... 77
10.1 Before commissioning and following modifications ... 77
10.1.1 Checklist for integrator – to be performed prior to commissioning and following modifications ... 77
10.2 To be performed periodically by competent persons ... 79
10.3 Periodically by the operator ... 80
10.3.1 Checklist – periodically by the operator ... 81

11 Maintenance ... 82

12 Troubleshooting ... 83
12.1 What to do in case of failure? ... 83
12.2 Operating indicators of the LEDs ... 83
12.3 Error messages 7-segment display ... 84

13 Disposing ... 89

14 Service and support ... 90

15 Technical data ... 91
15.1 General specifications ... 91
15.2 Dimensions and weights ... 93
15.3 Dimensioned drawings: Accessories ... 95

16 Order guide and accessories 98
17 EU/EC Declaration of Conformity 104

1 About this document

1.1 Used symbols and signal words

Tab. 1.1: Warning symbols and signal words

	Symbol indicating dangers to persons
	Symbol indicating possible property damage
NOTE	Signal word for property damage Indicates dangers that may result in property damage if the measures for danger avoidance are not followed.
CAUTION	Signal word for minor injuries Indicates dangers that may result in minor injury if the measures for danger avoidance are not followed.
WARNING	Signal word for serious injury Indicates dangers that may result in severe or fatal injury if the measures for danger avoidance are not followed.
DANGER	Signal word for life-threatening danger Indicates dangers with which serious or fatal injury is imminent if the measures for danger avoidance are not followed.

Tab. 1.2: Other symbols

	Symbol for tips Text passages with this symbol provide you with further information.
↳	Symbol for action steps Text passages with this symbol instruct you to perform actions.
⇨	Symbol for action results Text passages with this symbol describe the result of the preceding action.

Tab. 1.3: Terms and abbreviations

Response time	The response time of the protective device is the maximum time between the occurrence of the event that results in activation of the safety sensor and the provision of the switching signal at the interface of the protective device (e.g., OFF state of the OSSD pair).
Blanking	Deactivation of the protective function of individual beams or beam areas with monitoring for interruption
ESPE	**E**lectro-**s**ensitive **p**rotective **e**quipment
CS	Switching signal from a control (**C**ontroller **S**ignal)
FG	Function group (**F**unction **G**roup)
LED	LED, display element in transmitter and receiver
MaxiScan	Multiple scan, up to 100 ms
MLC	Brief description of the safety sensor, consisting of transmitter and receiver

$MTTF_d$	Mean time to dangerous failure (**M**ean **T**ime **T**o dangerous **F**ailure)
OSSD	Safety-related switching output (**O**utput **S**ignal **S**witching **D**evice)
PFH_d	Probability of a dangerous failure per hour (**P**robability of dangerous **F**ailure per **H**our)
PFI	(**P**rotection **F**ield **I**nterrupted)
PL	**P**erformance **L**evel
P-mode	Protective mode
Reduced resolution	Reduction of the detection capability of the protective field without monitoring for tolerating small objects in the protective field
RES	Start/restart interlock (Start/**RES**tart interlock)
Scan	Consecutive scans of the protective field from the first to the last beam
Safety sensor	System consisting of transmitter and receiver
SIL	**S**afety **I**ntegrity **L**evel
SPG	**S**mart **P**rocess **G**ating
TH	Timer halt signal
State	ON: device intact, OSSD switched on OFF: device intact, OSSD switched off Locking: device, connection or control / operation faulty, OSSD switched off (lock-out)

1.2 Checklists

The checklists (see chapter 10 "Testing") serve as a reference for the machine manufacturer or supplier. They replace neither testing of the complete machine or system prior to initial commissioning nor their periodic testing by a qualified person (see chapter 2.2 "Necessary competencies"). The checklists contain minimum testing requirements. Depending on the application, other tests may be necessary.

2 Safety

For mounting, operating and testing, this document as well as all applicable national and international standards, regulations, rules and directives must be observed. Relevant and supplied documents must be observed, printed out and handed to affected persons.

↳ Before working with the safety sensor, completely read and observe the documents applicable to your task.

In particular, the following national and international legal regulations apply for the commissioning, technical inspections and work with safety sensors:

- Directive 2006/42/EC
- Directive 2014/35/EU
- Directive 2014/30/EU
- Directive 89/655/EEC supplemented by directive 95/63 EC
- OSHA 1910 Subpart O
- Safety regulations
- Accident-prevention regulations and safety rules
- Ordinance on Industrial Safety and Health and employment protection act
- Product Safety Law (ProdSG and 9. ProdSV)

	NOTICE
	For safety-related information you may also contact local authorities (e.g., industrial inspectorate, employer's liability insurance association, labor inspectorate, occupational safety and health authority).

2.1 Intended use and foreseeable misuse

	WARNING
	A running machine may result in serious injury! ↳ Make certain that the safety sensor is correctly connected and that the protective function of the protective device is ensured. ↳ Make certain that, during all conversions, maintenance work and inspections, the system is securely shut down and protected against being restarted.

2.1.1 Intended use

- The safety sensor may only be used after it has been selected in accordance with the respectively applicable instructions and relevant standards, rules and regulations regarding labor protection and safety at work, and after it has been installed on the machine, connected, commissioned, and checked by a competent person (see chapter 2.2 "Necessary competencies"). The devices are designed for indoor use only.
- When selecting the safety sensor it must be ensured that its safety-related capability meets or exceeds the required performance level PL_r ascertained in the risk assessment (see chapter 15.1 "General specifications").
- The safety sensor protects persons or body parts at points of operation, danger zones or access points of machines and systems.
- With the *access guarding* function, the safety sensor detects persons only when they enter the danger zone but cannot tell whether there are any persons inside the danger zone. For this reason, a start/restart interlock or a suitable stepping behind protection in the safety chain is essential in this case.
- Maximum permissible approach speeds (see ISO 13855):
  - 1.6 m/s for access guarding
  - 2.0 m/s for guards of points of operation
- The construction of the safety sensor must not be altered. When manipulating the safety sensor, the protective function is no longer guaranteed. Manipulating the safety sensor also voids all warranty claims against the manufacturer of the safety sensor.

- The improper repair of the protective device may result in loss of the protective function. Make no repairs to the device components.
- The safety sensor must be inspected regularly by a competent person to ensure proper integration and mounting (see chapter 2.2 "Necessary competencies").
- The safety sensor must be exchanged after a maximum of 20 years. Repairs or the exchange of wear parts do not extend the mission time.

SPG can only be used if the following is known to the control:

- The times at which the position of the transport material is no more than 200 mm in front of and no more than 200 mm after the electro-sensitive protective equipment (ESPE) are known to the control. In some cases, additional measures may be necessary for position determination, e.g., trigger, sensor, etc.
- If additional measures are necessary for position determination, they must not come from a source that is easily tampered with.
  If necessary, use the evaluation of additional information, e.g., belt movement signal.

	WARNING
	Reduce conveyor speed! If the time at which the object exits the protective field is not known to the control, the conveyor speed must be reduced to the maximum value that is permissible for automatic gating end: Operating modes 1, 6: 0.1 m/s Operating mode 5: 0.2 m/s

2.1.2 Foreseeable misuse

Any use other than that defined under the “Approved purpose” or which goes beyond that use is considered improper use.

In principle, the safety sensor is **not** suitable as a protective device for use in the following cases:

- Danger posed by ejected objects or the spraying of hot or hazardous liquids from within the danger zone
- Applications in explosive or easily flammable atmospheres

	WARNING
	Severe injuries when riding along on or next to the conveyor belt! ↳ Make certain that it is not possible for persons to enter or to ride along on and next to the conveyor belt or transport material during SPG operation.

2.2 Necessary competencies

The safety sensor may only be configured, installed, connected, commissioned, serviced and tested in its respective application by persons who are suitably qualified for the given task. General prerequisites for suitably qualified persons:

- They have a suitable technical education.
- They are familiar with the relevant parts of the operating instructions for the safety sensor and the operating instructions for the machine.

Task-specific minimum requirements for competent persons:

Configuration

Specialist knowledge and experience in the selection and use of protective devices on machines as well as the application of technical rules and the locally valid regulations on labor protection, safety at work and safety technology.

Specialist knowledge in programming safety-related controls SRASW acc. to ISO 13849-1.

Mounting

Specialist knowledge and experience needed for the safe and correct installation and alignment of the safety sensor with regard to the respective machine.

Electrical installation

Specialist knowledge and experience needed for the safe and correct electrical connection as well as safe integration of the safety sensor in the safety-related control system.

Operation and maintenance

Specialist knowledge and experience needed for the regular inspection and cleaning of the safety sensor – following instruction by the person responsible.

Servicing

Specialist knowledge and experience in the mounting, electrical installation and the operation and maintenance of the safety sensor in accordance with the requirements listed above.

Commissioning and testing

- Experience and specialist knowledge in the rules and regulations of labor protection, safety at work and safety technology that are necessary for being able to assess the safety of the machine and the use of the safety sensor, including experience with and knowledge of the measuring equipment necessary for performing this work.
- In addition, a task related to the subject matter is performed in a timely manner and knowledge is kept up to date through continuous further training - *Competent person* in terms of the German Betriebssicherheitsverordnung (Ordinance on Industrial Safety and Health) or other national legal regulations.

2.3 Responsibility for safety

Manufacturer and operator must ensure that the machine and implemented safety sensor function properly and that all affected persons are adequately informed and trained.

The type and content of all imparted information must not lead to unsafe actions by users.

The manufacturer of the machine is responsible for:

- Safe machine construction and information on any residual risks
- Safe implementation of the safety sensor, verified by the initial test performed by a competent person (see chapter 2.2 "Necessary competencies")
- Imparting all relevant information to the operating company
- Adhering to all regulations and directives for the safe commissioning of the machine

The operator of the machine is responsible for:

- Instructing the operator
- Maintaining the safe operation of the machine
- Adhering to all regulations and directives for labor protection and safety at work
- Periodic testing by a competent person (see chapter 2.2 "Necessary competencies")

2.4 Disclaimer

The liability of Leuze electronic GmbH + Co. KG is to be excluded in the following cases:

- Safety sensor is not used as intended.
- Safety notices are not adhered to.
- Reasonably foreseeable misuse is not taken into account.
- Mounting and electrical connection are not properly performed.
- Proper function is not tested (see chapter 10 "Testing").
- Changes (e.g., constructional) are made to the safety sensor.

3 Device description

The safety sensor consists of an MLC 500 transmitter and an MLC 530SPG receiver. It is protected against overvoltage and overcurrent acc. to IEC 60204-1 (protection class 3). The safety sensor is not dangerously influenced by ambient light (e.g., welding sparks, warning lights).

3.1 Device overview of the MLC family

The series is characterized by four different receiver classes (Basic, Standard, Extended, SPG) with specific features and properties (see table below).

Tab. 3.1: Device models in the series with specific features and functions

Device type	Transmitter			Receiver				
Function package				Basic		Standard	Ex-tended	SPG
Model	MLC 500 MLC 501	MLC 500/ A	MLC 502	MLC 510 MLC 511	MLC 510/ A	MLC 520	MLC 530	MLC 530 SPG
OSSDs (2x)				■		■	■	■
AS-i		■			■			
Transmission channel changeover	■		■	■		■	■	■
LED indicator	■	■	■	■	■	■	■	■
7-segment display						■	■	■
Automatic start/restart				■		■	■	
RES						■	■	■
EDM						■		
Linkage							■	
Blanking							■	■
Muting							■	

Device type	Transmitter			Receiver				
Function package				Basic		Standard	Ex-tended	SPG
Model	MLC 500 MLC 501	MLC 500/ A	MLC 502	MLC 510 MLC 511	MLC 510/ A	MLC 520	MLC 530	MLC 530 SPG
SPG								■
Multi-scan							■	■
Range reduc-tion	■		■					
Test input			■					

Protective field properties

The beam distance and the number of beams are dependent on the resolution and protective field height.

	NOTICE
	Depending on the resolution, the effective protective field height can be larger than the optically active area of the safety sensor housed in yellow (see chapter 3.1 "Device overview of the MLC family" and see chapter 15.1 "General specifications").

Device synchronization

The synchronization of receiver and transmitter for creating a functioning protective field is done optically, i.e. without cables, via two specially coded synchronization beams. A cycle (i.e. a pass from the first to the last beam) is called a scan. The length of a scan determines the length of the response time and affects the calculation of the safety distance (see chapter 7.1.1 "Calculation of safety distance S").

	NOTICE
	For the correct synchronization and function of the safety sensor, at least one of the two synchronization beams must be free during synchronization and operation. During the SPG process, an interruption of both synchronization beams up to 60 s is possible (see chapter 4.1 "Overview and principle").

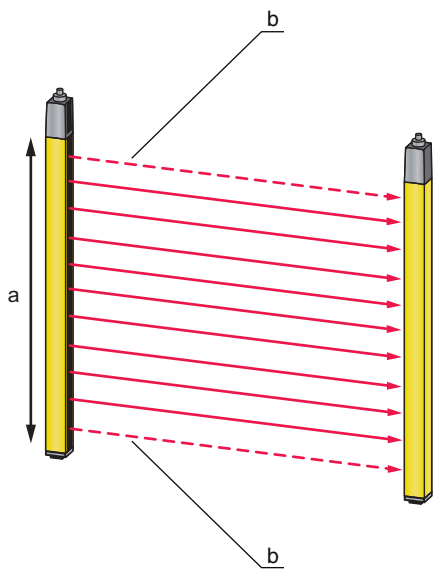

a Optically active area, housed in yellow
b Synchronization beams

Fig. 3.1: Transmitter-receiver system

QR code

A QR code as well as the corresponding web address are located on the safety sensor.

At the web address, you will find device information and error messages (see chapter 12.3 "Error messages 7-segment display") after scanning the QR code with a mobile end device or after entering the web address.

When using mobile end devices, mobile service charges can accrue.

www.mobile.leuze.com/mlc/

Fig. 3.2: QR code with corresponding web address (URL) on the safety sensor

3.2 Connection technology

The transmitter and receiver feature an M12 connector as an interface to the machine control with the following number of pins:

Device model	Device type	Device plug
MLC 500	Transmitter	5-pin
MLC 530 SPG	Extended receiver, Smart Process Gating	8-pin

3.3 Display elements

The display elements of the safety sensors simplify start-up and fault analysis.

3.3.1 Operating indicators on the MLC 500 transmitter

Located in the connection cap on the transmitter are two LEDs which serve as function indicators:

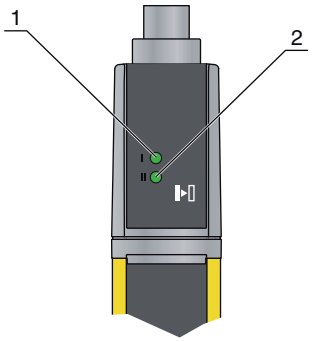

1 LED1, green/red
2 LED2, green

Fig. 3.3: Indicators on the MLC 500 transmitter

Tab. 3.2: Meaning of the LEDs on the transmitter

LED	Color	State	Description
1	Green/red	OFF	Device switched off
		Red	Device error
		Green	Normal operation
2	Green	Flashing	For 10 s after switch-on: reduced range selected by the wiring (see chapter 8.1 "Pin assignment transmitter and receiver").
		OFF	Transmission channel C1
		ON	Transmission channel C2

3.3.2 Operating indicators on the MLC 530 SPG receiver

Three LEDs and a 7-segment display for visualizing the operating state are located on the receiver:

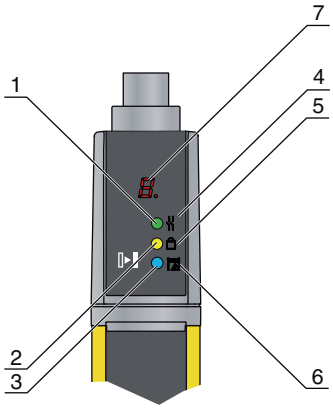

1 LED1, red/green
2 LED2, yellow
3 LED3, blue
4 OSSD icon
5 RES icon
6 Blanking/SPG icon
7 7-segment display

Fig. 3.4: Indicators on the MLC 530 SPG receiver

Tab. 3.3: Meaning of the LEDs on the receiver

LED	Color	State	Description
1	Red/green	OFF	Device switched off
		Red	OSSD off
		Red, flashing slowly (approx. 1 Hz)	External error
		Red, flashing fast (approx. 10 Hz)	Internal error
		Green	OSSD on

LED	Color	State	Description
2	Yellow	OFF	• RES activated and enabled • or RES blocked and protective field interrupted
		ON, OSSD off	RES activated and blocked but ready to be unlocked - protective field free
		ON, OSSD on	CS switching signal is applied
3	Blue	OFF	No special function (blanking, SPG, …) active
		ON	Protective field parameter (blanking) correctly taught
		Slowly flashing	• SPG active • or override active
		Short flashing	Protective field interrupted and RES blocked • Teaching of protective field parameters • or restart/override necessary

7-segment display

In normal operation, the 7-segment display shows the number of the operating mode. In addition, it helps during the detailed error diagnostics (see chapter 12 "Troubleshooting") and serves as an alignment aid (see chapter 9.2 "Aligning the sensor").

Tab. 3.4: Meaning of the 7-segment display

Display	Description
After switching on	
8	Self test
t n n	Response time (t) of the receiver in milliseconds (n n)
In normal operation	
1, 5 or 6	Selected operating mode
1, 5 or 6 flashing	Weak signal
For alignment	
	Alignment display (see chapter 3.3.3 "Alignment display"). • Segment 1: beam area in upper third of the protective field • Segment 2: beam area in middle third of the protective field • Segment 3: beam area in lower third of the protective field
For error diagnostics	
F…	**F**ailure, internal device error
E…	**E**rror, external error
U…	**U**sage info, application error

For error diagnostics, the error's respective letter is displayed first followed by the number code. The display is repeated cyclically. In the case of blocking errors, the voltage supply must be separated and the cause of the error must be eliminated. Before switching on again, the steps taken before initial commissioning must be repeated (see chapter 10.1 "Before commissioning and following modifications").

The 7-segment display switches to alignment mode when the device has not yet been aligned or when the protective field has been interrupted (after 5 s). In this case, a fixed beam area from the protective field is assigned to every segment.

3.3.3 Alignment display

Approximately 5 s after a protective-field interruption, the 7-segment display switches to alignment mode.

In this mode, one third of the total protective field (top, middle, bottom) is assigned to one of the three horizontal segments. In the case of uniform resolution over the entire protected area, the state of this partial protective field is indicated as follows:

Tab. 3.5: Function of alignment display

Segment	Description
On	All beams in the beam area are uninterrupted.
Flashing	At least one, but not all beams in the beam area are uninterrupted.
Switched off	All beams in the beam area are interrupted.

When the protective field has been free for about 5 s, the device switches back to the display of the operating mode.

4 Smart Process Gating

4.1 Overview and principle

Smart Process Gating (SPG) is a timing-controlled control process for access guarding with bridging function.

- SPG is used only for material transport out of or into danger zones.
- SPG uses two independent control signals to activate the bridging function.
- External sensors are not necessary.

SPG principle

Activation of the bridging function takes place by means of two independent control signals:

- A CS switching signal (“controller signal”) from a control.
- A PFI protective field violation signal that was triggered by the transport material which must be detected by the receiver within 4 s after the CS switching signal is applied.

	NOTICE
!	**The safety sensor must remain in sync in order to receive a valid protective field violation signal PFI!** The two synchronization beams of the safety light curtain can be simultaneously interrupted for no more than 60 s during the SPG process. ↳ Make certain that one synchronization beam always remains free.

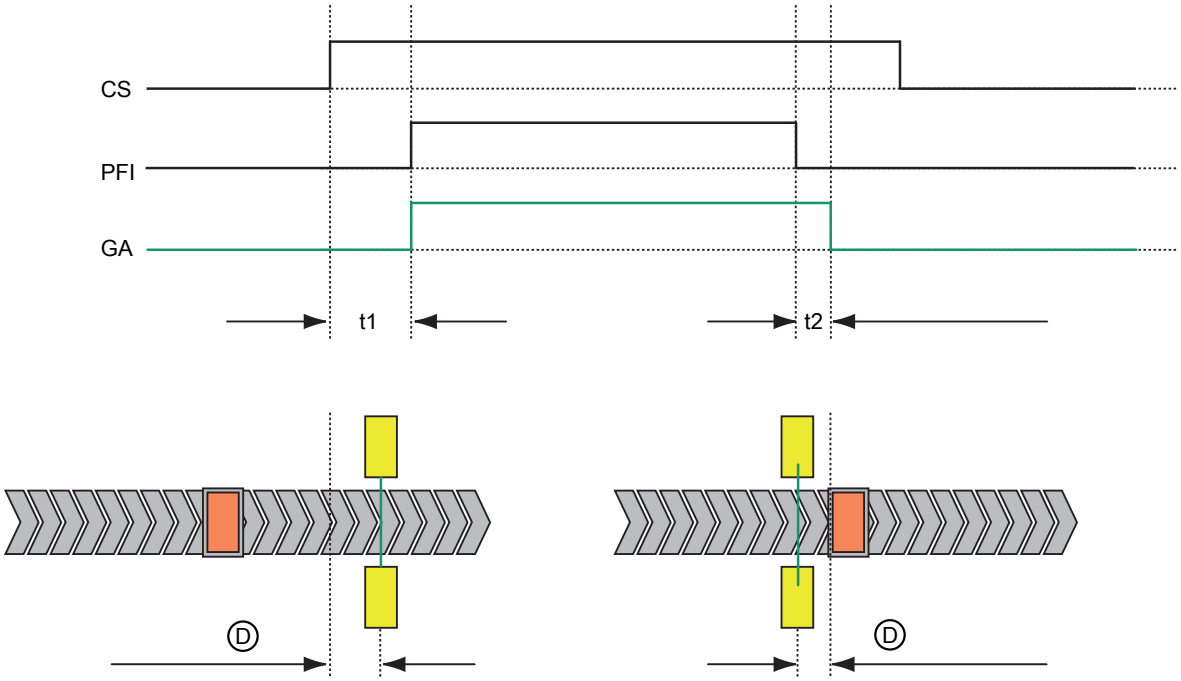

CS	Switching signal from the control
PFI	Protective field interrupted
GA	Gating active
t1	t < 4 s
t2	t = 1 s or 2 s (depending on the operating mode)
D	< 200 mm

Fig. 4.1: SPG principle

SPG functions and operating modes

The different SPG functions are grouped into several operating modes. Each operating mode is to be considered a complete parameter set.

- The operating mode is hardwired via a wire bridge in the connection cable. In the event of a device exchange, it is neither necessary nor possible to configure the sensor.
- The number of the selected operating mode is displayed statically on the 7-segment display of the receiver.
- Operating mode 1: SPG with qualified stop function (see chapter 4.4.1 "Operating mode 1 - Qualified stop")
- Operating mode 5: Standard SPG (see chapter 4.4.2 "Operating mode 5 - Standard")
- Operating mode 6: SPG with qualified stop function and partial gating (see chapter 4.4.3 "Operating mode 6 - Partial gating")

Tab. 4.1: Overview of the functions in the individual operating modes

	Operating mode		
Functions	**1**	**5**	**6**
Performance Level			
PL d with standard control		■	
PL e with safety control	■	■	■
Minimum time for ending gating (see chapter 4.5.1 "Controlled gating end")	100 ms	100 ms	100 ms
Protective-field filter time Brief clearing of the protective field (1 s or 2 s) is possible without interruption of the gating event. Small gaps in the load can thereby be tolerated.	2 s	1 s	2 s

	Operating mode		
Functions	**1**	**5**	**6**
Max. conveyor speed without additional measure	0.1 m/s	0.2 m/s	0.1 m/s
Qualified stop	■		■
Partial gating			■

The following SPG functions are available in all SPG operating modes:

- Gating termination by the control (see chapter 4.5.1 "Controlled gating end")
- Gating timeout extension (see chapter 4.5.2 "Gating timeout extension")
- Gating sequence reset (see chapter 4.5.3 "Gating sequence reset")
- Gating restart (see chapter 4.5.4 "Gating restart")
- Override (see chapter 4.5.5 "Override")

	NOTICE
	The following general functions of the MLC safety light curtains are available in all SPG operating modes (see chapter 5 "Functions"): Start/restart interlock (RES) Transmission channel changeover Operating range selection Signal output Blanking

4.2 SPG requirements

General requirements

SPG is used for access guarding for material transport into or out of danger zones. Thus, as with muting, the following prerequisites are to be satisfied:

- The transport material must completely fill the opening that is to be safeguarded during passage. The distance to the fixed parts of the protective device must be less than 200 mm. If that cannot be ensured, other measures are necessary, e.g.:
  - Wicket gates whose actuation is monitored by a safety sensor.
  - Additional vertically mounted protective sensors for monitoring the gaps.

WARNING

Severe injuries when riding along on or next to the conveyor belt!

↳ Make certain that it is not possible for persons to enter or to ride along on and next to the conveyor belt or transport material during SPG operation.

SPG requirements

SPG can only be used if the following is known to the control:

- The times at which the position of the transport material is no more than 200 mm in front of and no more than 200 mm after the electro-sensitive protective equipment (ESPE) are known to the control. In some cases, additional measures may be necessary for position determination, e.g., trigger, sensor, etc.
- If additional measures are necessary for position determination, they must not come from a source that is easily tampered with.
  If necessary, use the evaluation of additional information, e.g., belt movement signal.

WARNING

Reduce conveyor speed!

If the time at which the object exits the protective field is not known to the control, the conveyor speed must be reduced to the maximum value that is permissible for automatic gating end:

Operating modes 1, 6: 0.1 m/s

Operating mode 5: 0.2 m/s

NOTICE

Transmitter and receiver of the protective device must be mounted in such a way that they cannot be pushed or damaged by the transport material.

The prerequisites for SPG operation often exist in, e.g., the following applications:

- When exiting a processing cell, the control usually knows when the processing time ends and when the drive of the transport system must be switched on.
- In the area of conveyor lines, e.g., with cross conveyors, the exact sequence and the precise position of the transported goods is usually known. With this knowledge, the CS switching signal necessary for SPG operation can be generated in the control.

Prerequisites for CS switching signal generation

- The CS switching signal may only be generated if the transport material is less than 200 mm away from the protective field. This prevents people from entering the danger zone while gating is activated.
- The CS switching signal must, e.g., be generated automatically from the process sequence or derived in the control through time extension.
- The transport material must trigger the protective field violation (PFI) in less than 4 s after the CS switching signal.
- To prevent persons from entering the danger zone after the end of gating, it must be ensured that the transport material is less than 200 mm away from the protective field after the end of gating.

- If necessary, the controlled gating end must be used to shorten the gap (see chapter 4.5.1 "Controlled gating end").
- If no other measures are possible, a hard guard is to be extended accordingly.

	NOTICE
	Erroneous operation when generating the CS switching signal! If the generation of the CS switching signal is directly and solely dependent on the action of a person, deliberate misuse or tampering are possible. ↳ Make certain that the CS switching signal is never directly derived or derived solely from the pressing of a button. This applies, in particular, for SPG operation at picking stations.

	NOTICE
	↳ The limits of 200 mm before and after the danger zone must also be maintained on system start-up or in the event of changed conveyor speeds. In accordance with the risk assessment or machine-specific C-standard, deviations may be possible under certain circumstances. ↳ Adherence to the limits of 200 mm before and after the danger zone must be taken into consideration in the system design.

Defining the operating mode

↳ Depending on the function required, select the suitable operating mode via corresponding electrical wiring (see chapter 8 "Electrical connection").
see chapter 4.4.1 "Operating mode 1 - Qualified stop"
see chapter 4.4.2 "Operating mode 5 - Standard"
see chapter 4.4.3 "Operating mode 6 - Partial gating"

Ending gating

- Automatic gating end: The protective field is clear for longer than 1 s (operating mode 5) or 2 s (operating mode 1 or 6).
- Controlled gating end: The signals from the protective field and CS switching signal are both inactive for longer than 0.1 s (see chapter 4.5.1 "Controlled gating end").

4.3 SPG checklist for programmers

Tab. 4.2: Checklist for SPG integration

General information		
Criterion for SPG operation	Criterion satisfied	Remark
Access guarding with material passage		
Position of the transport material is known to the control		
Position of the transport material is known to the control with additional measure		Additional measures may be, e.g., trigger, sensor, etc.
Position information comes from a source that cannot easily be tampered with		
Signal generation		
Criterion for SPG operation	Criterion satisfied	Remark
The CS switching signal is not generated directly by a person		
If a sensor is used to derive the CS signal, this sensor signal may only be used indirectly,		e.g., through time extension in the control
Protective field violation < 4 s after switching signal		
Switching signal is not generated until the object is less than 200 mm away from the protective field		
The CS switching signal is no longer applied 200 mm after the protective field has been cleared		If necessary, the controlled gating end must be used (see chapter 4.5.1 "Controlled gating end")

NOTICE

There is an increased risk of tampering during entry into the danger zone.

↳ To reduce the risk of tampering, evaluate additional information, e.g., a belt movement signal.

4.4 SPG operating modes

Multiple SPG operating modes are available for SPG operation in various applications.

- The operating mode is hardwired via a wire bridge in the connection cable. In the event of a device exchange, configuration is neither necessary nor possible.
- The number of the selected operating mode is displayed statically on the 7-segment display of the receiver.

Tab. 4.3: Overview of the functions in the individual operating modes

	Operating mode		
Functions	**1**	**5**	**6**
Performance Level			
PL d with standard control		■	
PL e with safety control	■	■	■
Minimum time for ending gating (see chapter 4.5.1 "Controlled gating end")	100 ms	100 ms	100 ms
Protective-field filter time Brief clearing of the protective field (1 s or 2 s) is possible without interruption of the gating event. Small gaps in the load can thereby be tolerated.	2 s	1 s	2 s
Max. conveyor speed without additional measure	0.1 m/s	0.2 m/s	0.1 m/s
Qualified stop	■		■
Partial gating			■

4.4.1 Operating mode 1 - Qualified stop

The following functions are active in this operating mode (see chapter 8.2 "Operating mode 1"):

- Qualified stop function
- MaxiScan
- Start/restart interlock active (see chapter 5.1 "Start/restart interlock RES")

The following functions can be selected as well:

- SPG timeout extension to up to 100 hours (see chapter 4.5.2 "Gating timeout extension")
- Fixed blanking can be taught with position tolerance of ± 1 beam (see chapter 5.5 "Blanking")

NOTICE	
!	The TH timer hold signal from the control must not be generated by inverting the CS switching signal.

Operating mode 1 is intended primarily for SPG use at lower conveyor speeds (< 0.1 m/s), e.g., in the automotive sector. For an automatic gating end to be possible at speeds up to 0.1 m/s, t2 is set to 2 s.

With the qualified stop function, a normal stop can be performed without interruption of the protective field even after the CS switching signal was activated.

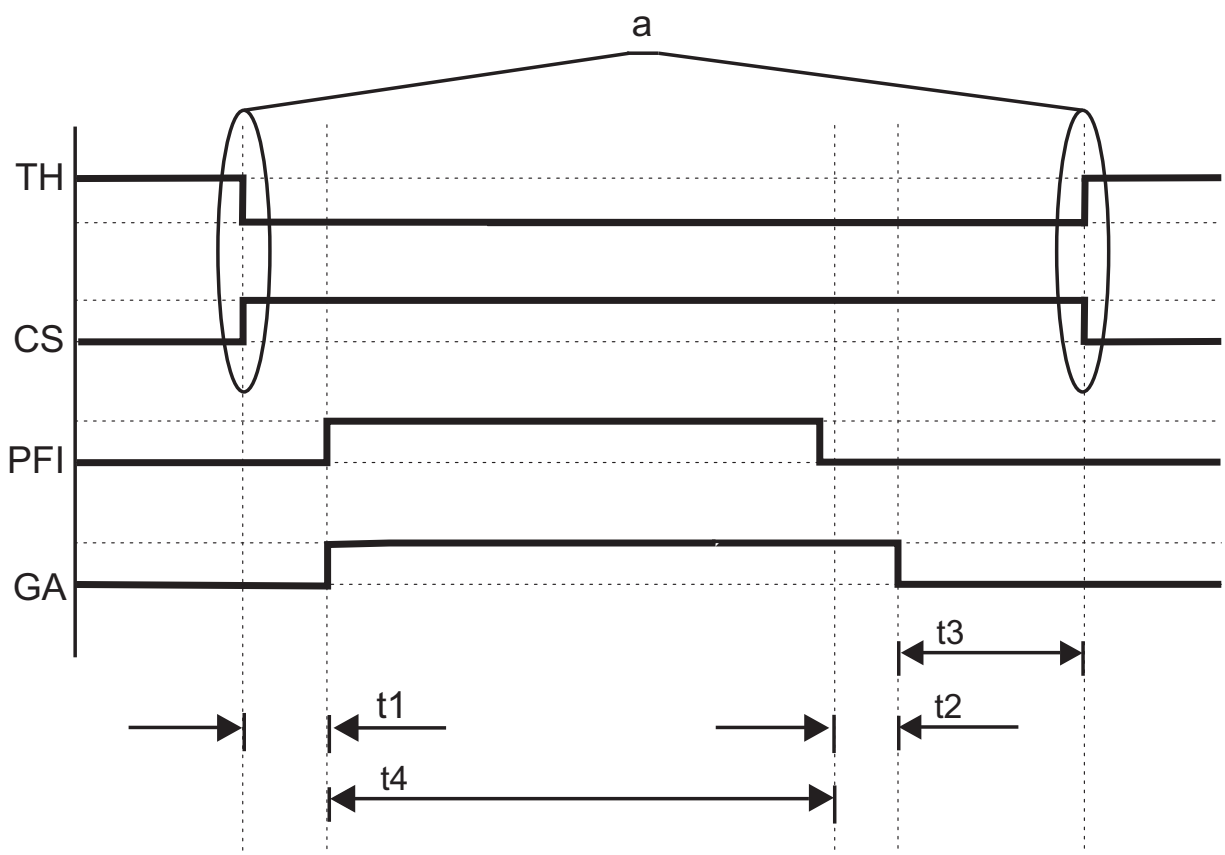

CS	Switching signal from the control
TH	Timer hold signal from the control
PFI	Protective field interrupted
GA	Gating active
a	Antivalent signal change between CS and TH
t1	< 4 s
t2	2 s
t3	< 20 s
t4	< 10 min

Fig. 4.2: Operating mode 1 - Qualified stop

The gating sequence is initiated by the antivalent signal change between CS and TH within 0.5 s.

If it is not possible for the protective field to be interrupted within 4 s after initiation of the gating sequence, the possibility exists to perform a qualified stop.

The function of the stop of the gating sequence as well as of the gating restart is initiated by the renewed edge change of the CS and TH signals.

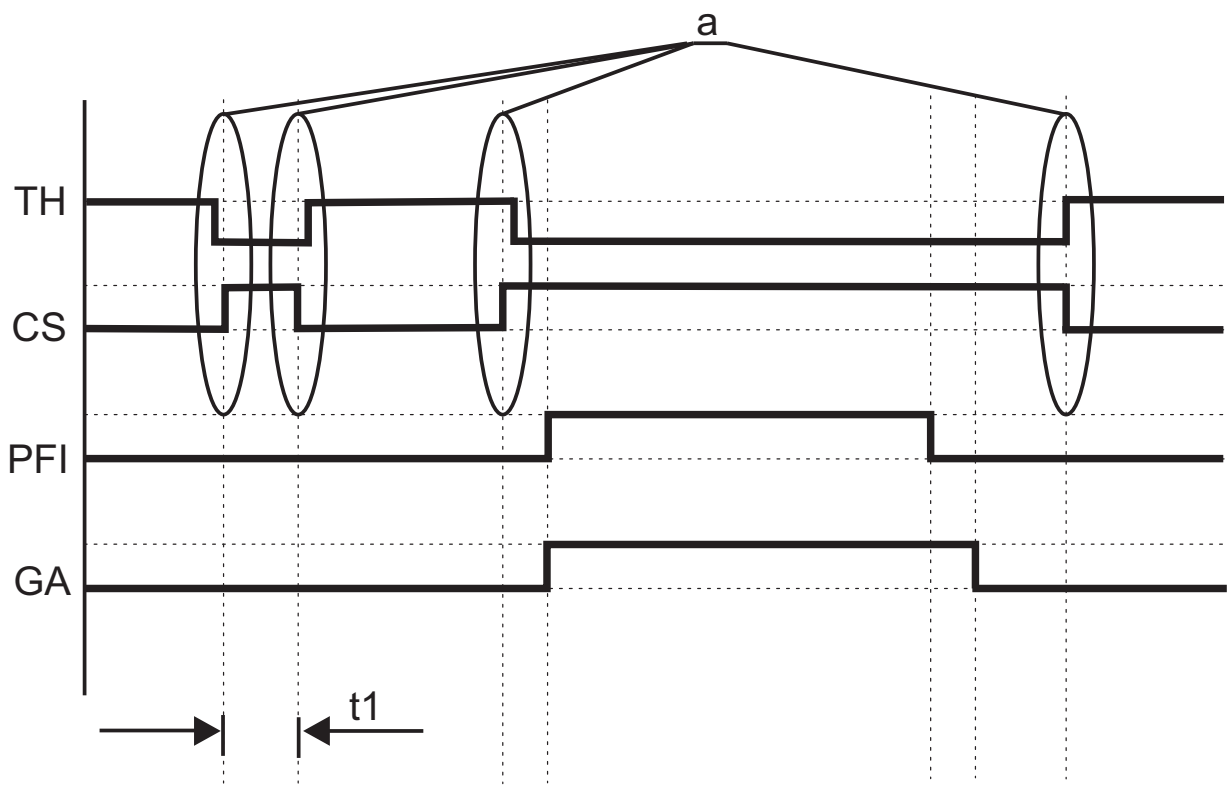

CS	Switching signal from the control
TH	Timer hold signal from the control
PFI	Protective field interrupted
GA active	Gating active
a	Antivalent signal change between CS and TH
t1	< 4 s

Fig. 4.3: Operating mode 1 - Qualified stop

4.4.2 Operating mode 5 - Standard

The following functions are active in this operating mode (see chapter 8.3 "Operating mode 5"):

- MaxiScan
- Start/restart interlock active (see chapter 5.1 "Start/restart interlock RES")

The following functions can be selected as well:

- Gating timeout extension to up to 100 hours (see chapter 4.5.2 "Gating timeout extension")
- Fixed blanking can be taught with position tolerance of ± 1 beam (see chapter 5.5 "Blanking")

NOTICE	
	In operating mode 5, non-safe controls can also be used. Performance Level PL d is thereby achieved.

The operating mode 5 is intended primarily for conveyor speeds > 0.2 m/s, such as they are used in, e.g., the intralogistics sector.

- The permissible protective field filter time t2 is set to 1 s. The protective field can thereby be cleared for up to 1 s, e.g., for gaps in the load, etc.
- At higher transport speeds, the gating end must be performed by the control (see chapter 4.5.1 "Controlled gating end").

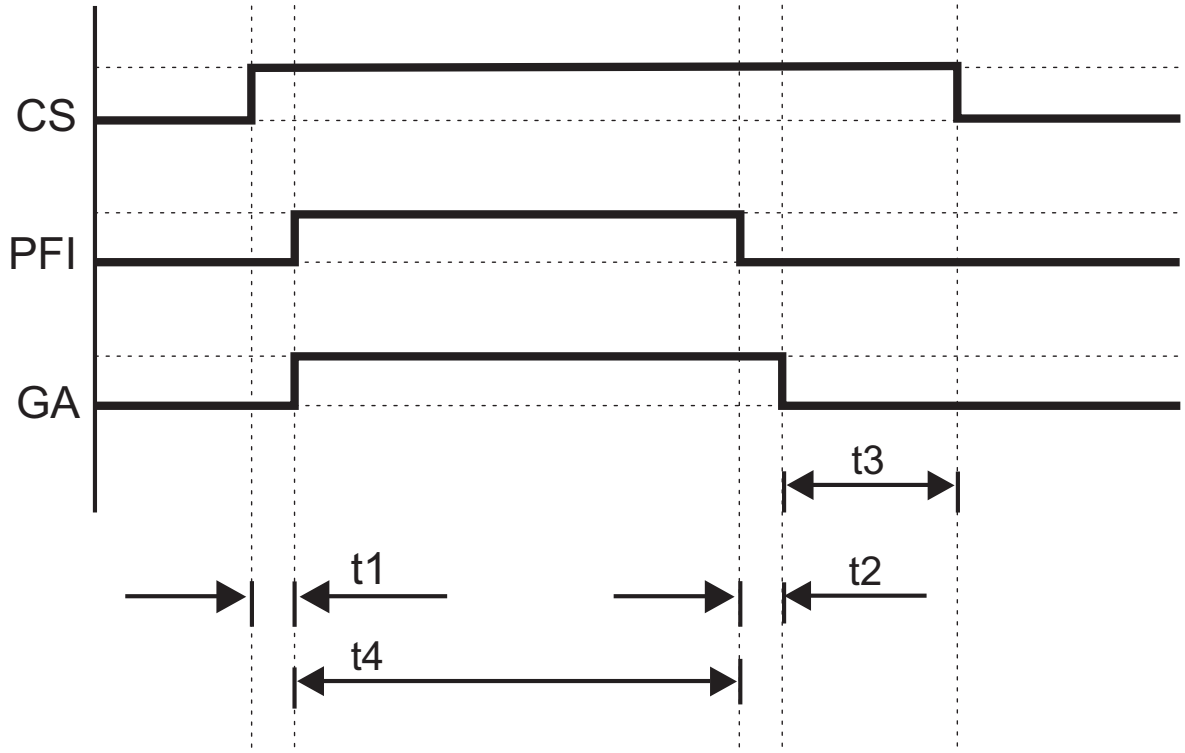

CS	Switching signal from the control
TH	Timer hold signal from the control (optional)
PFI	Protective field interrupted
GA	Gating active
t1	< 4 s
t2	1 s
t3	< 20 s
t4	< 10 min

Fig. 4.4: Operating mode 5

	NOTICE
	The timeout of 10 minutes can optionally be extended by another control signal (TH timer hold signal) from the control to up to 100 hours (see chapter 4.5.2 "Gating timeout extension").

4.4.3 Operating mode 6 - Partial gating

The following functions are active in this operating mode (see chapter 8.4 "Operating mode 6"):

- Partial gating
- Qualified stop function
- MaxiScan
- Start/restart interlock active (see chapter 5.1 "Start/restart interlock RES")

The following functions can be selected as well:

- Gating timeout extension to up to 100 hours (see chapter 4.5.2 "Gating timeout extension")
- Fixed blanking can be taught with position tolerance of ± 1 beam (see chapter 5.5 "Blanking")

Like operating mode 1, operating mode 6 is intended primarily for lower conveyor speeds (< 0.1 m/s). For an automatic gating end to be possible at speeds up to 0.1 m/s, t2 is set to 2 s.

Partial gating

In addition to the functionality of operating mode 1, operating mode 6 also includes partial gating. The top four beams are excluded from gating.

- With partial gating, unauthorized riding along on the transport material can be recognized, and so-called pendulum flaps can be monitored.
- With partial gating, the upper four beams are not bridged during a gating process on the side turned away from the connector. Interruptions of these beams always cause the OSSDs to switch off.

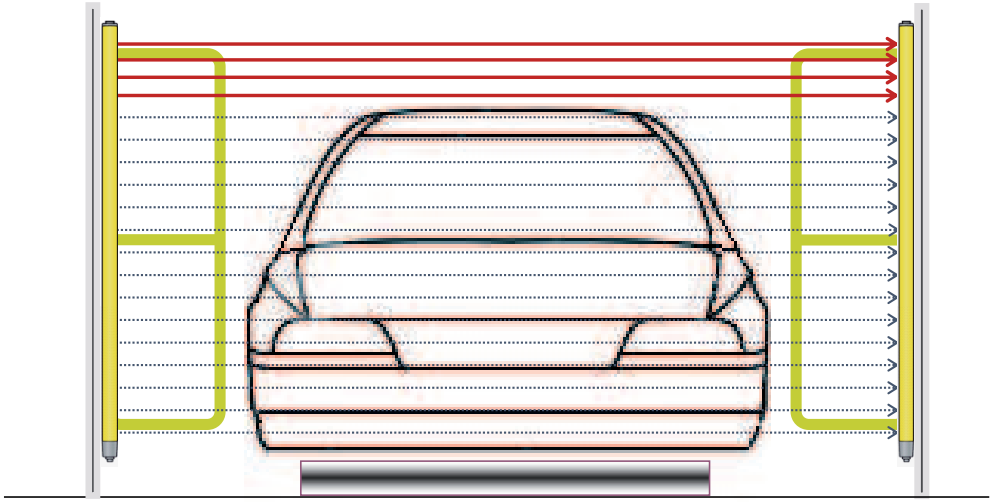

	NOTICE
!	The upper four beams must be free during operation in operating mode 6. Interruptions cause the OSSDs to switch off.

- The gating sequence is initiated by the antivalent signal change between CS and TH within 0.5 s.
- If it is not possible for the protective field to be interrupted within 4 s after initiation of the gating sequence, the possibility exists to perform a qualified stop.

	NOTICE
!	**Monitoring of pendulum flaps!** If operating mode 6 is to be used to monitor the pendulum flaps, the following additional safety information must be observed: ↳ The pendulum flap / swing door must feature a solid design and require tools for dismantling. ↳ The safety door must be designed in accordance with ISO 14120 and ISO 13857. Side access without triggering the pendulum flap must not be possible. ↳ The transport material may not actuate the pendulum flap (e.g., excessive load). ↳ The transmitter, receiver, pendulum flap/door must be protected against damage, e.g., to prevent warping or slipping. ↳ The pendulum flap must not be made of transparent material. Opening of the pendulum flap (in both directions) must safely interrupt the corresponding protective field area.

Qualified stop function

	NOTICE
!	The TH timer hold signal from the control must not be generated by inverting the CS switching signal.

The function of the stop of the gating sequence as well as of the gating restart is initiated by the renewed edge change of the CS and TH signals.

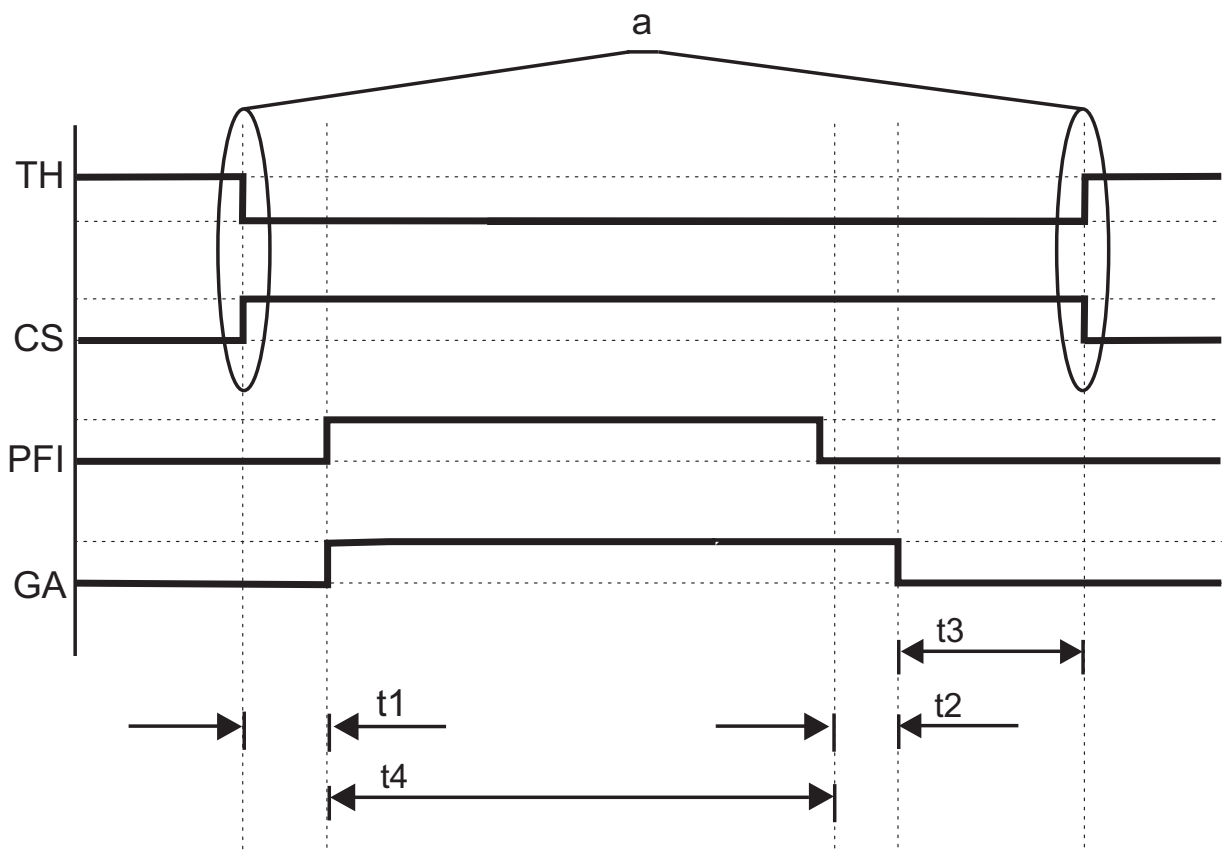

CS	Switching signal from the control
TH	Timer hold signal from the control
a	Antivalent signal change between CS and TH
PFI	Protective field interrupted
GA	Gating active
t1	< 4 s
t2	< 2 s
t3	< 20 s
t4	< 10 min

Fig. 4.5: Operating mode 6 - Qualified stop

4.5 Operating-mode-independent SPG functions

4.5.1 Controlled gating end

With interruption of the gating by the control, the distance between the protective field and transport material that exists at the end of the gating function can be minimized.

The controlled gating end is used to maintain the necessary distance of less than 200 mm between transport material and protective field at the end of gating.

- The initiated gating sequence is ended upon removal of the CS switching signal.
- The CS switching signal must not be removed until the protective field is clear (PFI signal).
- The gating sequence ends maximum 100 ms after removal of the CS switching signal.

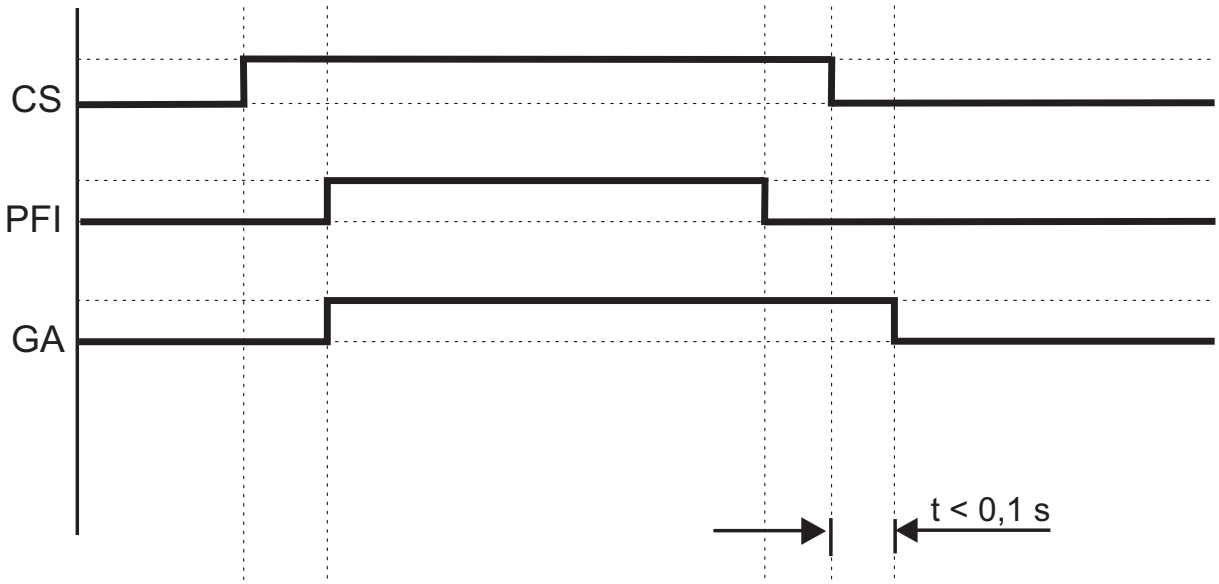

CS	Switching signal from the control
PFI	Protective field interrupted
GA	Gating active

Fig. 4.6: Controlled gating end in operating mode 5

In operating modes 1 and 6, the TH timer hold signal must also be connected antivalently.

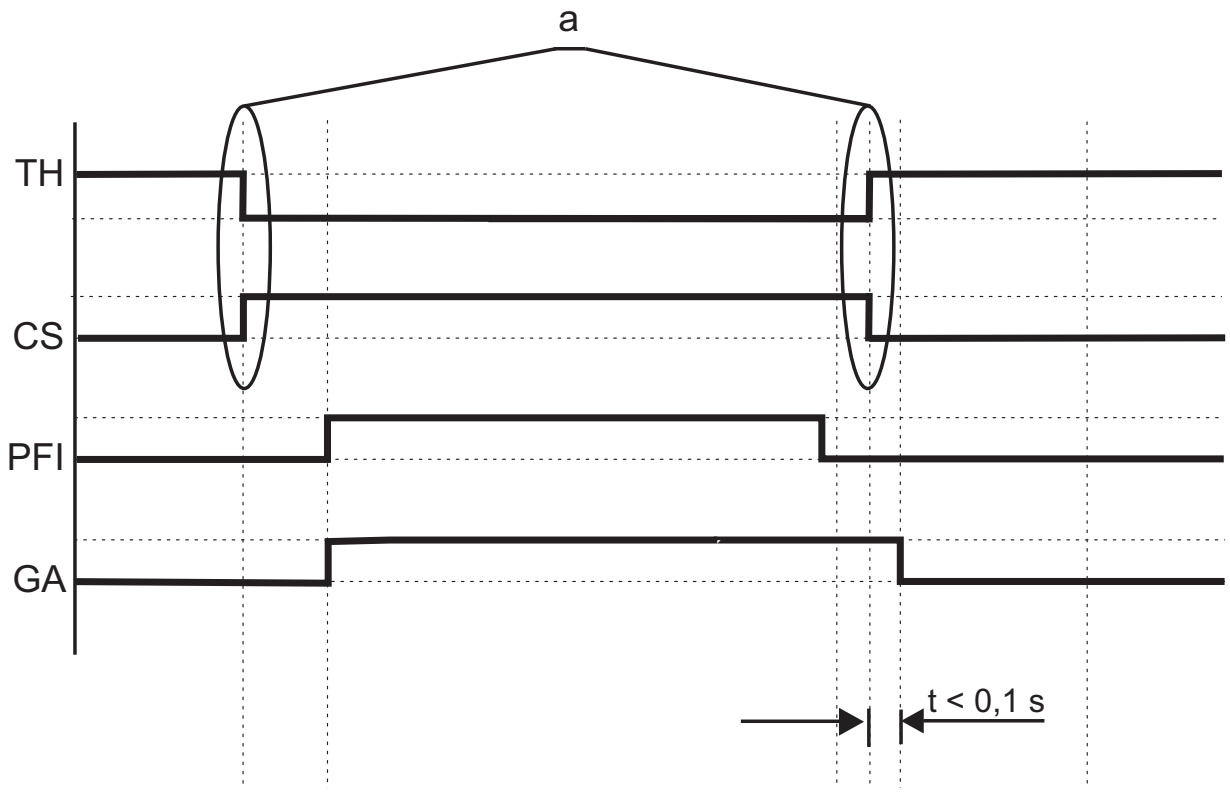

CS	Switching signal from the control
TH	Timer hold signal from the control
PFI	Protective field interrupted
GA	Gating active
a	Antivalent signal change between CS and TH

Fig. 4.7: Controlled gating end in operating modes 1 and 6

NOTICE	
!	If the distance between transport material and protective field is greater than 200 mm at the end of the gating process, the controlled gating end must be used to reduce the distance. If the controlled gating end is not used, other measures are necessary, e.g., fencing.

NOTICE	
i	Operating mode 5: at conveyor speed v < 0.2 m/s, controlled gating end or other measures are not necessary. Operating modes 1 and 6: at conveyor speed v < 0.1 m/s, controlled gating end or other measures are not necessary.

4.5.2 Gating timeout extension

In order to prevent easy manipulation, the bridging cycle is time-limited. If this time is exceeded (timeout), gating ends and results in shutdown of the OSSDs (E79).

	NOTICE
!	**Interruption of the transmitter/receiver synchronization on timeout extension!** The OSSDs of the safety light curtain switch off if the synchronization of transmitter and receiver is interrupted via the synchronization beams for longer than 60 s. ↳ For application scenarios with timeout extension, make certain that the upper or lower synchronization beam is not interrupted by the transport material. To do this, the length of the protective field is to be appropriately dimensioned.

The standard gating timeout of 10 minutes can optionally be extended by another control signal (TH timer hold signal) from the control to up to 100 hours. The timeout extension is available in all operating modes.

The timer hold signal (TH) must switch with the CS switching signal within 0.5 s:

- The CS switching signal switches from 0 V to +24 V.
- The TH timer hold signal switches from +24 V to 0 V.
- When the TH timer hold signal switches from 0 V to +24 V, the gating sequence is extended.

If the control is faulty, the receiver switches to the interlock state (E69).

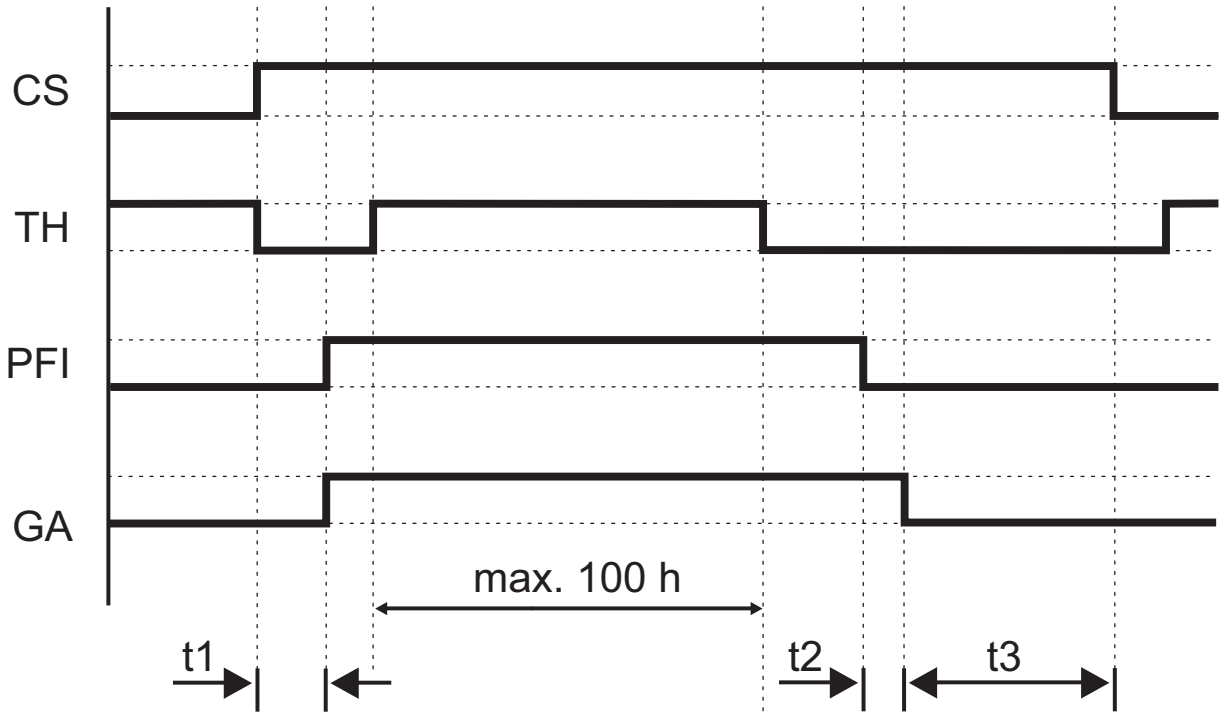

CS	Switching signal from the control
TH	Timer hold signal from the control
PFI	Protective field interrupted
GA	Gating active
t1	< 4 s
t2	= 1 s or 2 s
t3	< 20 s

Fig. 4.8: SPG timeout extension

4.5.3 Gating sequence reset

WARNING

Unauthorized reset may result in serious injury!

- An instructed person must watch the event carefully.
- Make certain that the danger zone can be viewed from the reset button and that the entire process can be observed by the instructed person.

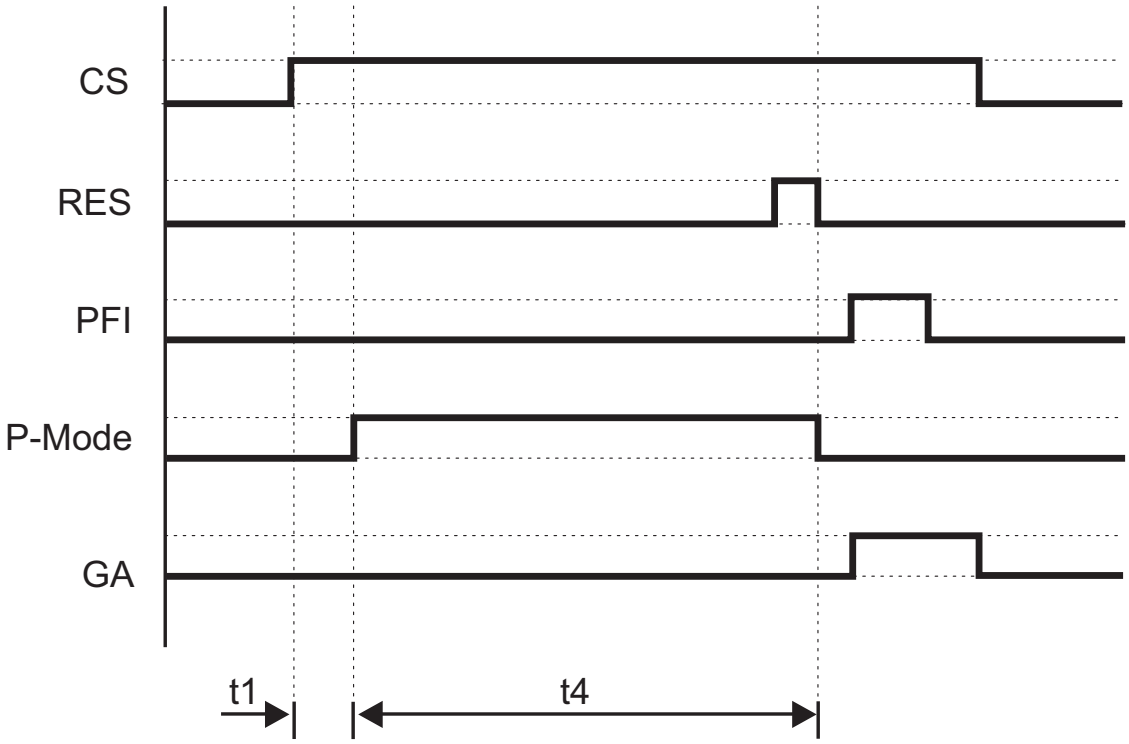

CS	Switching signal from the control
RES	Restart button
PFI	Protective field interrupted
P-mode	Protective mode
GA	Gating active
t1	< 4 s
t4	< 1 h

Fig. 4.9: Gating sequence reset

If the CS switching signal is applied for more than 4 s without the protective field being interrupted, the device switches to protective mode and the OSSDs switch off. If there is then no protective field violation, the RES signal can be used to start a new gating sequence.

- A new gating sequence can be started multiple times if still no protective field violation occurs after applying the RES signal.
- The gating sequence restart must occur within no more than one hour, otherwise the device switches to an interlock state.
- It may be necessary to reapply the CS switching signal before initiating a new gating sequence.

4.5.4 Gating restart

A gating restart is necessary in the following cases:

- The protective field is interrupted, but at least one synchronization beam is not occupied.

and

- The CS switching signal is activated (operating mode 5).
- The CS switching signal and the TH timer hold signal are activated (operating mode 1 or 6).

WARNING

Unauthorized gating restart may result in serious injury!

- An instructed person must watch the event carefully.
- Make certain that the danger zone can be viewed from the reset button and that the entire process can be observed by the instructed person.
- Before and during the gating restart, ensure that there are no people in the danger zone.

Performing gating restart

- If the safety sensor responds with an error message, perform an error reset first (see chapter 12 "Troubleshooting").
- Press and release the reset button within 0.15 s to 4 s.

The OSSDs of the safety sensor are switched on.

NOTICE

If, after the button is pressed for the second time, a valid gating state is present (CS switching signal is applied, protective field interrupted), the initiated gating sequence is continued. The ML signal output alternately delivers 0 V and 24 V until the OSSDs are switched on again.

4.5.5 Override

An override is necessary in the following cases:

- The protective field is interrupted and both synchronization beams are interrupted.

and

- The CS switching signal is activated (operating mode 5).
- The CS switching signal and the TH timer hold signal are activated (operating mode 1 or 6).

WARNING

Unmonitored overrides may result in serious injury!

- An instructed person must watch the event carefully.
- If necessary, the instructed person must release the reset button immediately to stop the dangerous movement.
- Make certain that the danger zone can be viewed from the reset button and that the entire process can be observed by a responsible person.
- Before and during the override, ensure that there are no people in the danger zone.

Perform override

- If the safety sensor responds with an error message, perform an error reset (see chapter 12 "Troubleshooting").
- Press and release the reset button within 0.15 s to 4 s.
- Press the reset button a second time and keep it pressed down.
- ⇨ The OSSDs of the safety sensor are switched on.
- Case 1: valid gating condition
  If a valid gating condition is found to exist, the OSSDs remain in the ON state, even if the reset button is released. The system resumes its normal operation.
- Case 2: invalid gating condition
  In these cases, the release of the OSSDs is maintained only for as long as the reset button is pressed.

NOTICE

Override not possible if there are problems with the application!

The causes of an invalid gating condition are to be investigated and remedied by a competent person.

The OSSDs are deactivated during the override if the reset button is released or the maximum time for the override (120 s) is exceeded.

NOTICE

The duration of the override is limited to 120 s.

If the reset button remains pressed down after 120 s, the safety sensor assumes its interlock state after 150 s.

Thereafter, the reset button must be pressed again and held down in order to continue the process. A step-by-step override is possible in this way.

NOTICE

If, after the button is pressed for the second time, a valid gating state is present (CS switching signal is applied, protective field interrupted), the initiated gating sequence is continued.

The ML signal output alternately delivers 0 V and 24 V until the OSSDs are switched on again.

5 Functions

An overview of features and functions of the safety sensor can be found in chapter “Device description” (see chapter 3.1 "Device overview of the MLC family").

For an overview of the SPG functions see chapter 4 "Smart Process Gating".

The following general functions of the MLC safety light curtains are available in all SPG operating modes:

- Start/restart interlock (RES)
- Transmission channel changeover
- Operating range selection
- Signal output
- Blanking
- MaxiScan

5.1 Start/restart interlock RES

After accessing the protective field, the start/restart interlock ensures that the safety sensor remains in the OFF state after the protective field has been cleared. It prevents automatic release of the safety circuits and automatic start-up of the system, e.g. if the protective field is again clear or if an interruption in the voltage supply is restored.

	NOTICE
	For access guarding, the start/restart interlock function is mandatory. The protective device may only be operated without start/restart interlock in certain exceptional cases and under certain conditions acc. to ISO 12100.

Using start/restart interlock

↳ Select the desired operating mode (see chapter 8 "Electrical connection").

The start/restart interlock function is automatically activated.

Switching the safety sensor back on after shutting down (OFF state):

↳ Press the reset button (press/release between 0.15 s and 4 s)

	NOTICE
	The reset button must be located outside the danger zone in a safe place and give the operator a good view of the danger zone so that he/she can check whether anyone is located in it (according to IEC 62046) before pressing the reset button.

	DANGER
	Risk of death if start/restart is operated unintentionally! ↳ Ensure that the reset button for unlocking the start/restart interlock cannot be reached from the danger zone. ↳ Before unlocking the start/restart interlock, make certain that no people are in the danger zone.

After the reset button has been actuated, the safety sensor switches to the ON state.

5.2 Transmission channel changeover

Transmission channels are used to prevent mutual interference of safety sensors which are located close to each other.

	NOTICE
	To guarantee reliable operation, the infrared beams are modulated so they can be discerned from the ambient light. Welding sparks or warning lights, e.g. from passing high-lift trucks, thereby do not influence the protective field.

With the factory setting, the safety sensor works in all operating modes with transmission channel C1.

The transmission channel of the transmitter can be switched by changing the supply voltage polarity (see chapter 8.1.1 "MLC 500 transmitter").

Select transmission channel C2 on the receiver:

- ↳ Connect pins 1, 3, 4 and 8 of the receiver and switch it on.
- ⇨ The receiver is switched to transmission channel C2. Switch the receiver off and again disconnect the connection between pins 1, 3, 4 and 8 before switching the receiver back on.

Re-select transmission channel C1 on the receiver:

- ↳ Repeat the procedure described above to again select transmission channel C1 on the receiver.
- ⇨ The receiver is switched to transmission channel C1 again.

	NOTICE
	Faulty function due to incorrect transmission channel! Select the same transmission channel on the transmitter and corresponding receiver.

5.3 Operating range selection

In addition to selecting the suitable transmission channels (see chapter 5.2 "Transmission channel changeover"), the operating range selection also serves to prevent mutual interference of adjacent safety sensors. At reduced operating range the light power of the transmitter reduces, so that around half of the nominal range is reached.

- ↳ Wire pin 4 (see chapter 8.1 "Pin assignment transmitter and receiver").
- ⇨ The wiring of pin 4 determines the transmitting power and thereby the range (without wiring pin 4 the reduced operating range is selected).

	WARNING
	Impairment of the protective function due to incorrect transmitting power! The light power emitted from the transmitter is reduced through a single channel and without safety-relevant monitoring. ↳ Do not use this configuration option for safety purposes. ↳ Note that the distance to reflective surfaces must always be selected so that no reflection bypass can occur even at maximum transmitting power (see chapter 7.1.4 "Minimum distance to reflective surfaces").

5.4 Signal output

This signal output outputs 24 V if gating is free of errors.

In the event of faulty gating, e.g., if the protective field is not interrupted after 4 s, it flashes.

5.5 Blanking

Blanking functions are used when objects must be located in the protective field for operational reasons.

	NOTICE
	If the *blanking* function is activated, suitable objects must be located within their respective protective field areas. Otherwise the OSSDs switch to the OFF state even if the protective field is free or they remain in the OFF state.

	WARNING
	Faulty application of blanking functions may result in serious injury! ↳ Only use the function when the objects introduced do not have glossy or reflective top and/or bottom surfaces. Only matte surfaces are permitted. ↳ Make sure that objects take up the entire width of the protective field so that the protective field cannot be accessed from the sides of the objects; otherwise the safety distance with reduced resolution must be calculated corresponding to the gap in the protective field. ↳ If necessary, properly mount mechanical locks which are fixed firmly to the object (see chapter 15.1 "General specifications") to prevent the “formation of shadows”, for example from tall objects or crooked installation. ↳ Monitor the position of the objects and the locks, if applicable, at all times by integrating them electrically into the safety circuit. ↳ Blankings in the protective field and changes to the protective field resolution should only be performed by qualified and instructed persons (see chapter 2.2 "Necessary competencies"). ↳ Only give corresponding tools such as a key for the teach key switch to qualified personnel.

	NOTICE
	Objects brought into the protective field must take up the entire field width so that it cannot be accessed next to the object. Otherwise locks are to be provided to prevent access.

	WARNING
	Risk of injury due to inadmissible application of blanking! Blanking is not permitted with danger zone guarding since the blanked areas would form accessible bridges to the danger zone. ↳ Do not use blanking for danger zone guarding.

Fixed blanking

With the *Fixed blanking* function, the safety sensor offers the chance of stationarily blanking up to 10 protective field areas consisting of any number of adjacent beams.

Prerequisites:

At least one of the two synchronization beams may not be blanked.

To prevent an interruption of the lower synchronization beam, an area of the conveyor system can be blanked if necessary.

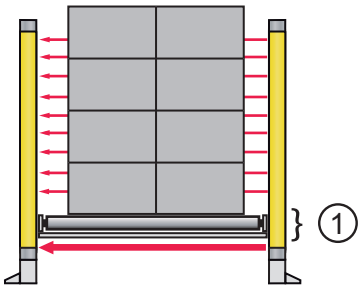

1 Blanked area

Fig. 5.1: Fixed blanking during gating

Mechanical locks prevent access to the protective field.

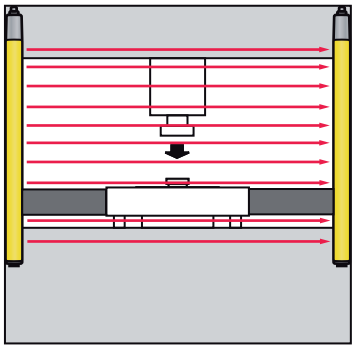

Fig. 5.2: Fixed blanking: mechanical locks prevent side access to the protective field

No "shadows" may form in the protective field.

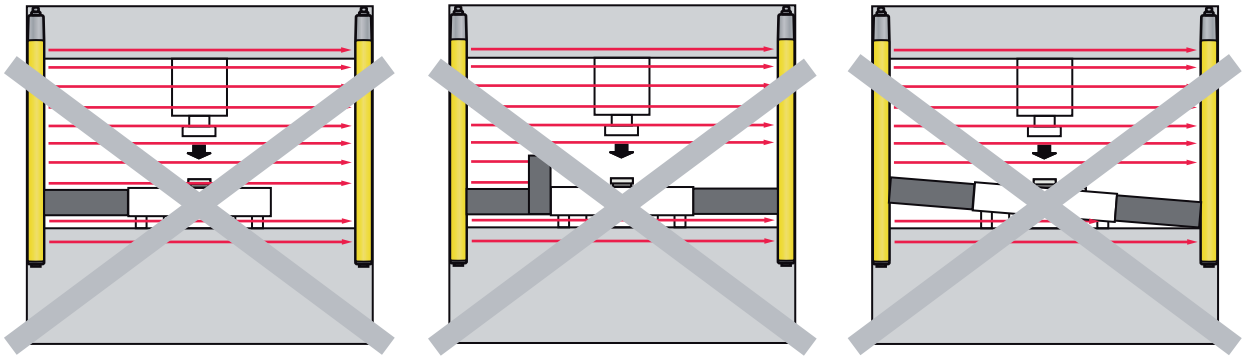

Fig. 5.3: Fixed blanking: prevention of formation of "shadows"

Taught blanking areas must have a minimum distance to each other which corresponds to the resolution of the safety sensor.

Fixed blanking with beam tolerance

Fixed blanking with beam tolerance is used for access guarding, for example to blank a roller conveyor so that it is resistant to interference.

In doing so, the receiver automatically applies a tolerance area of one beam on both sides of a taught fixed object, thereby expanding the movement area of the object by + 1 beam. On the borders of the blanked object, the resolution is reduced correspondingly by 2 beams.

Teaching of fixed blanking areas

Teaching protective field areas with blanking is performed via a key switch (see chapter 9.4 "Teaching of fixed blanking areas"):

- ✎ Mount all objects to be blanked in the protective field in the locations at which they are to be blanked.
- ✎ Press the teach key switch and release it within 0.15 s and 4 s.
- ⇨ The teach event begins. LED 3 flashes blue.
- ✎ Press the teach key switch again and release it within 0.15 s and 4 s.
- ⇨ The teach event ends. LED 3 illuminates blue if at least one beam area is blanked. All objects have been correctly taught.

	NOTICE
	After teaching a free protective field (teaching finished), thus determining a protective field without areas with fixed blanking, the blue LED switches off.

During teaching, the object size detected can vary by no more than one beam. Otherwise teaching is ended with the U71 user message (see chapter 12.1 "What to do in case of failure?").

6 Applications

The safety sensor only creates square protective fields.

6.1 Access guarding with SPG

Typical application areas for the MLC 530 SPG for material infeed into or out of danger zones are in the automotive and intralogistics sectors.

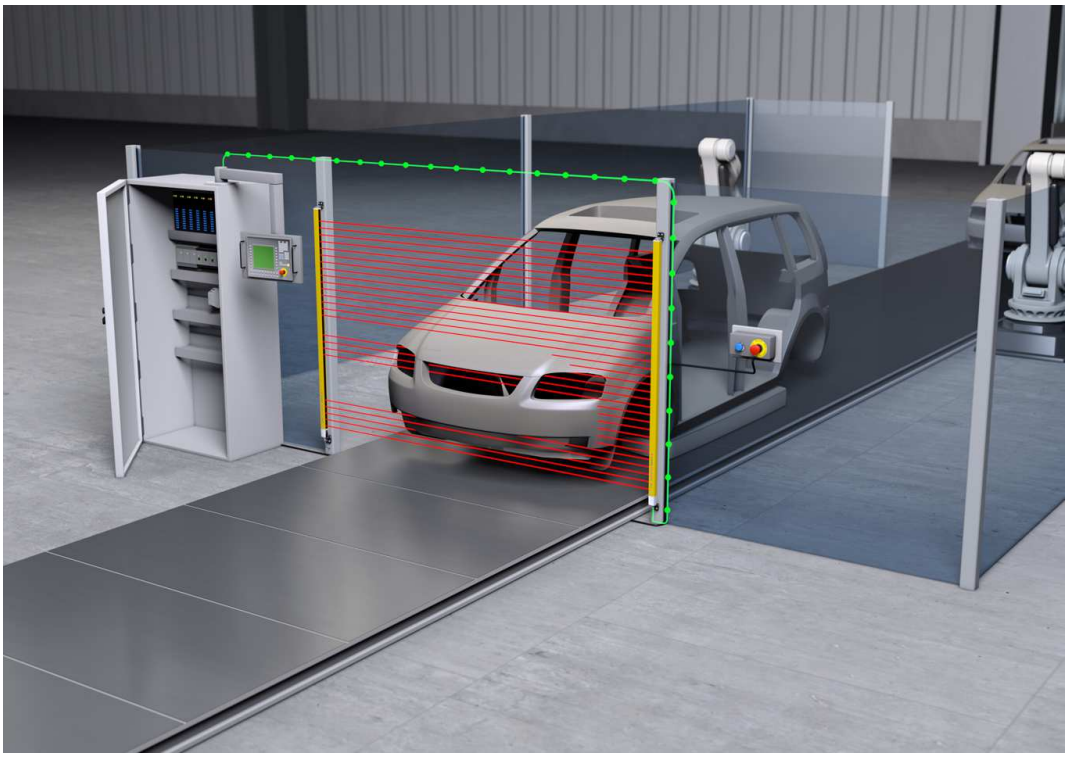

Fig. 6.1: Smart Process Gating (SPG) at automotive production lines

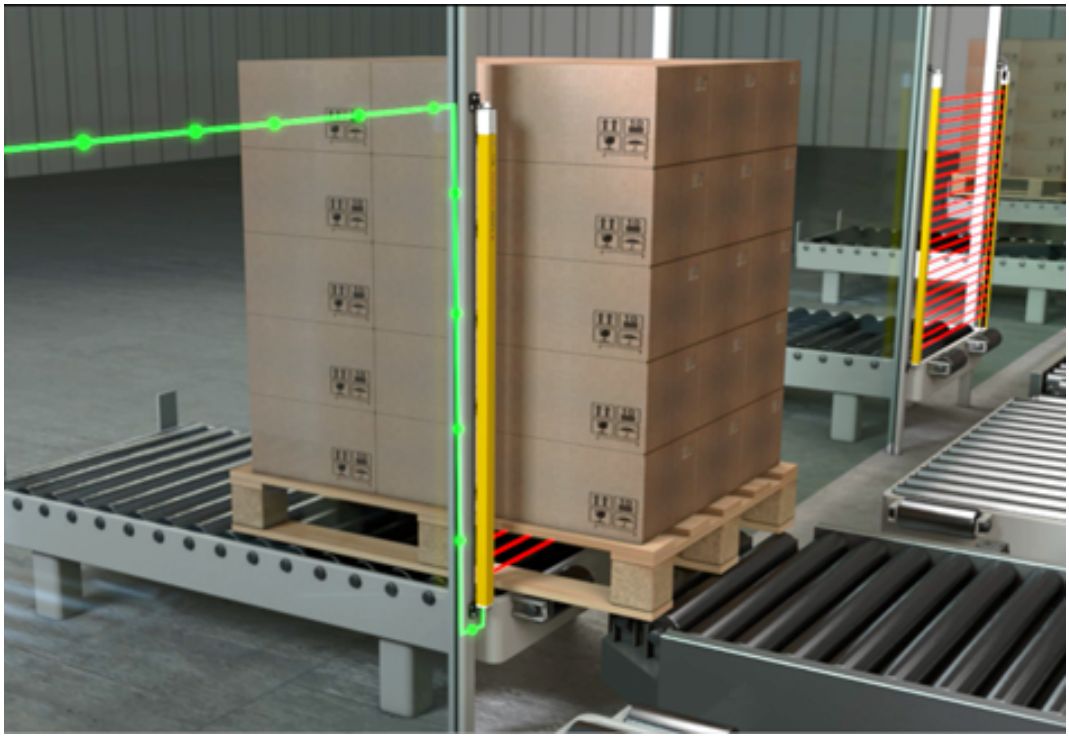

Fig. 6.2: Smart Process Gating (SPG) at conveyor lines

6.1.1 Transport out of a danger zone

Description

- Final assembly of vehicles
  Vehicles are transported out of a danger zone with a transport system.
- Required Performance Level: PL e
- Typical conveyor speed: < 0.1 m/s
- Operating mode 1 with a safety control is used (see chapter 4.4.1 "Operating mode 1 - Qualified stop").

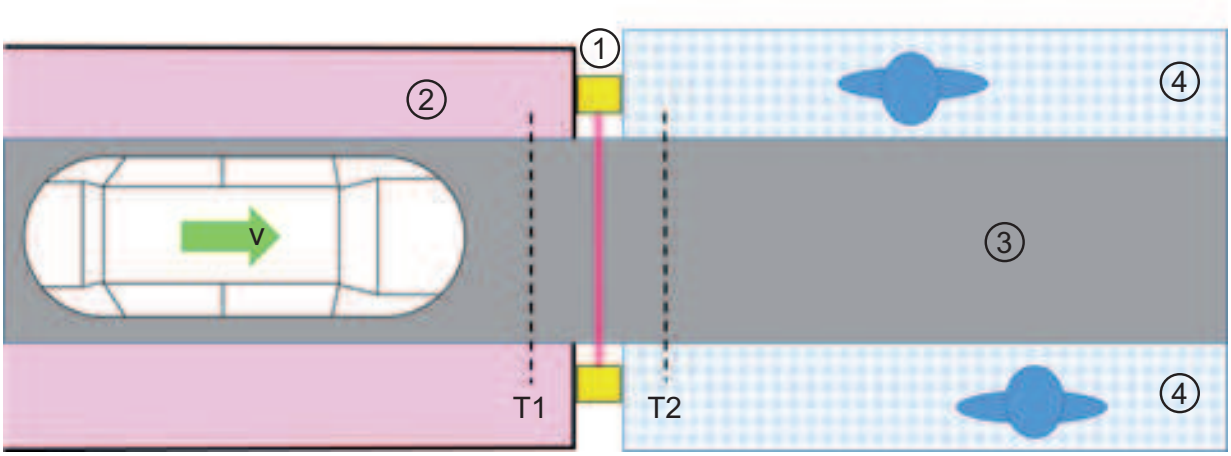

1 Protective sensor with SPG operation
2 Danger zone; automated assembly station
3 Transport system
4 Workplace for manual work
T1 Gating start
T2 Gating end
v Conveyor speed of the transport system (typically < 0.1 m/s)

Fig. 6.3: Transport out of a danger zone

Prerequisites and criteria for permissible SPG operation

Criterion for SPG operation	Criterion satisfied	Remark
Access guarding with material passage.	Yes	
Position of the transport material is known to the control.	Yes	The current position of the vehicle is determined from the conveyor speed and system sequence.
Position information comes from a source that cannot easily be tampered with	Yes	
The CS switching signal is not generated directly by a person.	Yes	The control calculates the switch-on time of the CS switching signal from the conveyor speed and route.
The CS switching signal is generated indirectly by a sensor.	Not applicable	
Protective field violation in less than 4 s after the CS switching signal.	Yes	If the transport flow is interrupted, the control can interrupt the SPG cycle if the protective field was not yet interrupted (see chapter 4.4.1 "Operating mode 1 - Qualified stop").

Criterion for SPG operation	Criterion satisfied	Remark
The CS switching signal is only generated if the transport material is less than 200 mm away from the protective field.	Yes	With a conveyor speed of 0.1 m/s, the CS switching signal may not be applied sooner than 2 s prior to interruption of the protective field.
The CS switching signal is no longer applied 200 mm after the protective field has been cleared.	Yes	With a conveyor speed of 0.1 m/s, the distance of 200 mm is traveled in 2 s (0.1 m/s x 2 s = 200 mm). The condition for automatic gating end is thereby satisfied.

The prerequisites for SPG operation are met.

Application information

Criterion	Limit value for SPG operation	Remark
Interruption of the synchronization beams	> 60 s	Because the synchronization beams can be interrupted for more than 60 s, the protective field length must be selected in accordance with ISO 13855 and be greater than the maximum height of the transport material.
Interruption of the transport flow necessary	Yes	Select operating mode 1 (see chapter 4.4.1 "Operating mode 1 - Qualified stop").
Distance from the transport material to the protective device	< 200 mm	No additional measure necessary since it is not possible to squeeze through between transport material and protective device.
	> 200 mm	Additional measure necessary, e.g., fencing or wicket gates. The evaluation of the wicket gates can be performed with operating mode 6 if necessary (see chapter 4.4.3 "Operating mode 6 - Partial gating").
Protective-field filter time	2 s (operating mode 1, operating mode 6) 1 s (operating mode 5)	A brief clearing of the protective field is possible without interruption of the gating event. Small gaps in the transport material can thereby be tolerated (see chapter 4.1 "Overview and principle"). For a conveyor speed of 0.1 m/s, gaps of up to 200 mm are tolerated in operating mode 1 (2 s x 0.1 m/s = 200 mm).
Gating > 10 minutes	10 minutes	Use timeout extension. Timeout extension of up to 100 hours is possible (see chapter 4.5.2 "Gating timeout extension"). Transmitter and receiver must remain in sync during the timeout: the protective field length must be greater than the transport material.

Process sequence

Operating mode 1 with a safety control (see chapter 4.4.1 "Operating mode 1 - Qualified stop").

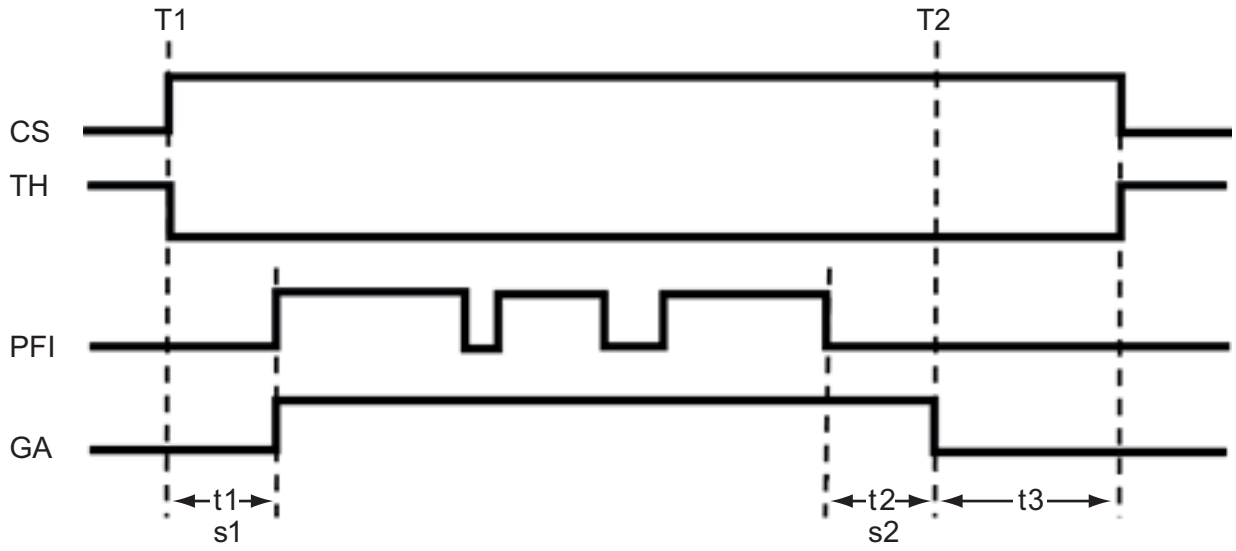

CS	Switching signal from the control
TH	Timer hold signal from the control
PFI	Protective field violation
GA	Gating active
T1	Start of the gating sequence
T2	Gating end
t1	Time difference between the CS switching signal and the protective field violation: < 4 s
s1	Distance traveled after activation of the CS switching signal until interruption of the protective field: < 200 mm
t2	Time difference between clearance of the protective field and automatic gating end: 2 s
s2	Distance traveled after clearance of the protective field until automatic gating end: < 200 mm
t3	Time difference between gating end and switching-off of the CS switching signal/activation of the timer hold signal: < 20 s

Fig. 6.4: Signal sequence during transport out of a danger zone

6.1.2 Inward transport of pallets

Description

- Euro pallets with drinks crates are transported in longitudinal direction into a film wrapping machine (wrapper).
- Required Performance Level: PL d
- To detect an incoming pallet, two sensors are mounted: PS1 and PS2.
  - The sensors are mounted so that both simultaneously detect the pallet at a distance < 0.2 m in front of the protective field of the safety light curtain.
  - Both sensor signals are tested in the control for simultaneity (300 ms). It is not possible for one person to actuate both sensors simultaneously within such a short time while the transport system is running.
- Together with the "transport system running" signal, the evaluated simultaneity signal generates the switching signal CS for starting the SPG cycle.
- Conveyor speed: 0.3 m/s.
  - Automatic gating end not possible
  - Gating termination required by the control
- Operating mode 5 without TH timer hold signal is used (see chapter 4.4.2 "Operating mode 5 - Standard").
  - Entry of the pallet into the wrapper is not interrupted once started until the pallet is in the wrapping position within the danger zone.
  - A timeout extension is not necessary. The timer hold signal TH is permanently switched to OFF.

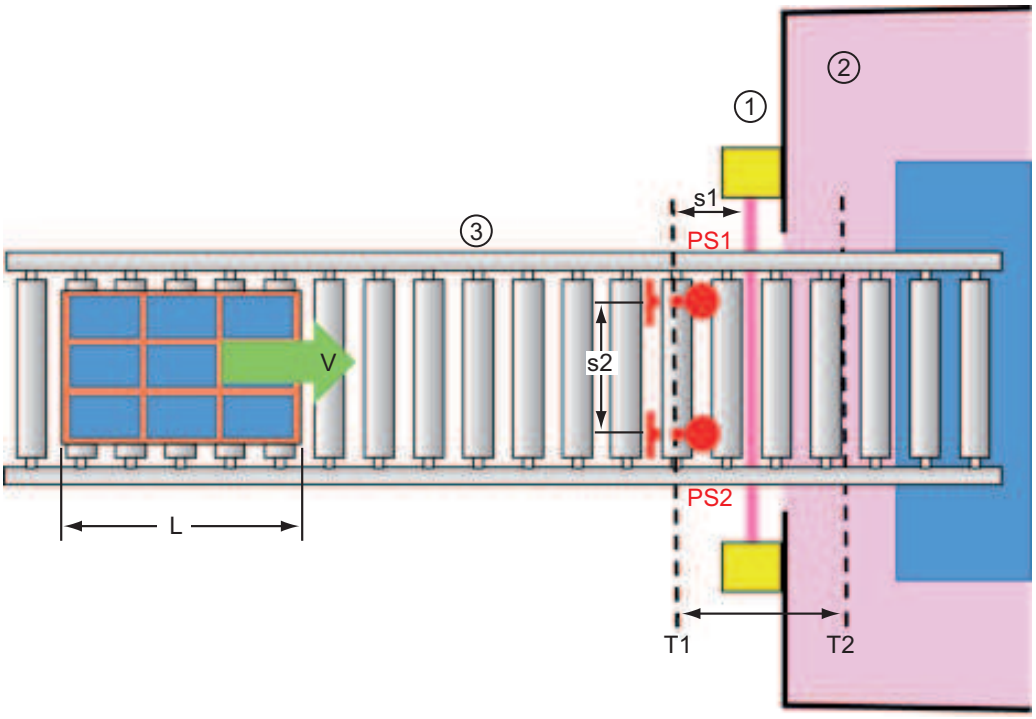

1	Safety light curtain with SPG function
2	Danger zone; foil wrapping machine (wrapper)
3	Transport system
v	Conveyor speed of the transport system (0.3 m/s)
PS1, PS2	Sensors
s2	Distance between sensors PS1 and PS2, e.g., 700 mm
L	Length of the pallet
T1	Gating start
T2	Gating end
s1	Distance traveled after activation of the CS switching signal until interruption of the protective field: < 200 mm

Fig. 6.5: Feeding a pallet into a danger zone

Prerequisites and criteria for permissible SPG operation

Criterion for SPG operation	Criterion satisfied	Remark
Access guarding with material passage.	Yes	
Position of the transport material is known to the control.	Yes	The control obtains additional information through the evaluation of sensor signals and belt-movement signal.
Position information comes from a source that cannot easily be tampered with	Yes	
The CS switching signal is not generated directly by a person.	Yes	
The CS switching signal is generated indirectly by a sensor.	Yes	
Protective field violation in less than 4 s after the CS switching signal.	Yes	At a conveyor speed of 0.3 m/s, the protective field is interrupted 0.66 s after applying the switching signal (0.2 m : 0.3 m/s = 0.66 s).
The CS switching signal is only generated if the transport material is less than 200 mm away from the protective field.	Yes	Sensors PS1 and PS2 are less than 200 mm in front of the protective device.
The CS switching signal is no longer applied 200 mm after the protective field has been cleared.	No	With a conveyor speed of 0.3 m/s, the distance is 0.3 m/s x 1 s = 300 mm. Automatic gating end is not possible. Gating must be interrupted by the control (see chapter 4.5.1 "Controlled gating end").

The prerequisites for SPG operation are met.

Application information

Criterion	Limit value for SPG operation	Remark
Interruption of the synchronization beams	< 60 s	Protective field length only dependent on ISO 13855.
Interruption of the transport flow necessary	No	
Distance from the transport material to the protective device	< 200 mm	No additional measure necessary since it is not possible to squeeze through between transport material and protective device.
	> 200 mm	Additional measure necessary, e.g., fencing or wicket gates. The evaluation of the wicket gates can be performed with operating mode 6 if necessary (see chapter 4.4.3 "Operating mode 6 - Partial gating").
Interruption of the two sensors PS1 and PS2 is possible by a person	No	Select a sufficiently large distance between the sensors, e.g., 700 mm.
Protective-field filter time	2 s (operating mode 1, operating mode 6) 1 s (operating mode 5)	A brief clearing of the protective field is possible without interruption of the gating event. Small gaps in the transport material can thereby be tolerated (see chapter 4.1 "Overview and principle"). For a conveyor speed of 0.3 m/s, gaps of up to 300 mm are tolerated in operating mode 5 (1 s x 0.3 m/s = 300 mm).

Process sequence

- Operating mode 5 without TH timer hold signal (see chapter 4.4.2 "Operating mode 5 - Standard")
- Start of the gating sequence: with a running transport system, sensors PS1 and PS2 are activated within, e.g., 300 ms. At time T1, the control generates the CS switching signal.
- Gating end at time T2:

  T2 = T1 + (L + 400 mm) / v
  - (L + 400 mm): length of the pallet plus 200 mm in front of and 200 mm after the protective device
  - v: conveyor speed of the transport system, e.g., 0.3 m/s

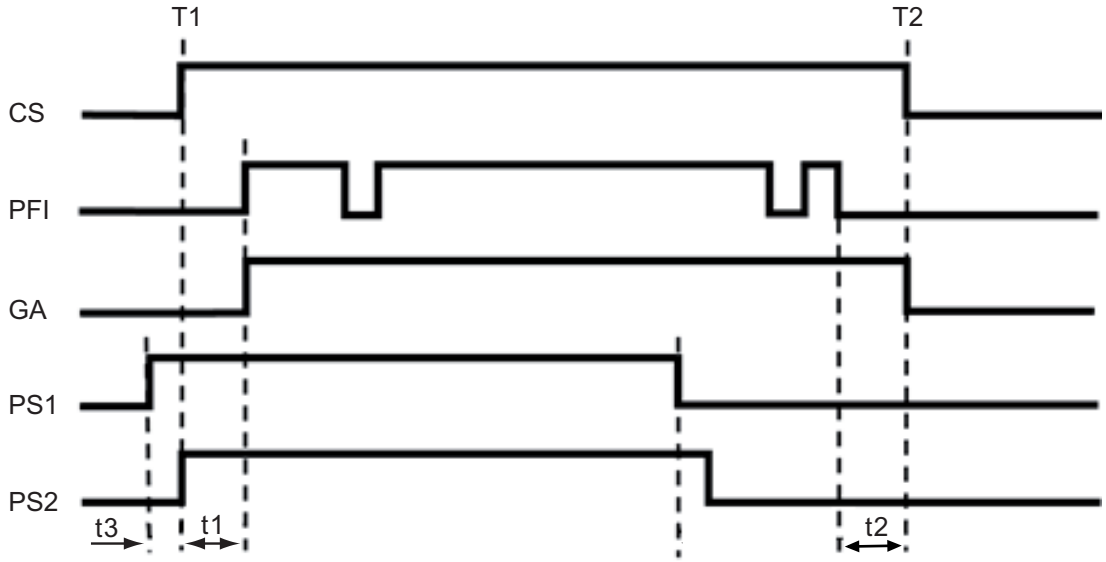

CS	Switching signal from the control
PFI	Protective field violation
GA	Gating active
PS1	Sensor 1
PS2	Sensor 2
T1	Start of the gating sequence
T2	Gating end
t1	Time difference between the CS switching signal and the protective field violation: < 4 s
t2	Time difference between clearing of the protective field and switching off of the CS switching signal: < 1 s
t3	Time difference of the sensor signals: < 300 ms

Fig. 6.6: Signal sequence when feeding a pallet into a danger zone

7 Mounting

WARNING

Improper mounting may result in serious injury!

The protective function of the safety sensor is only ensured if appropriately and professionally mounted for the respective, intended area of application.

- Only allow the safety sensor to be installed by qualified persons (see chapter 2.2 "Necessary competencies").
- Maintain the necessary safety distances (see chapter 7.1.1 "Calculation of safety distance S").
- Make sure that stepping behind, crawling under or stepping over the protective device is reliably ruled out and reaching under, over or around is taken into account in the safety distance, if applicable with additional distance C_{RO} corresponding to ISO 13855.
- Take measures to prevent that the safety sensor can be used to gain access to the danger zone, e.g. by stepping or climbing into it.
- Observe the relevant standards, regulations and these instructions.
- Clean the transmitter and receiver at regular intervals: environmental conditions (see chapter 15 "Technical data"), care (see chapter 11 "Maintenance").
- After mounting, check the safety sensor for proper function.

7.1 Arrangement of transmitter and receiver

Optical protective devices can only perform their protective function if they are mounted with adequate safety distance. When mounting, all delay times must be taken into account, such as the response times of the safety sensor and control elements as well as the stopping time of the machine, among others.

The following standards specify calculation formulas:

- IEC 61496-2, "Active optoelectronic protective devices": distance of the reflecting surfaces/deflecting mirrors
- ISO 13855, "Safety of machines - The positioning of protective equipment in respect of approach speeds of parts of the human body": mounting situation and safety distances

NOTICE

In accordance with ISO 13855, with a vertical protective field, it is possible to pass under beams over 300 mm or pass over beams under 900 mm. If the protective field is horizontal, climbing on the safety sensor must be prevented through suitable installation or with covers and the like.

7.1.1 Calculation of safety distance S

NOTICE

When using blanking, observe the necessary additional distances to the safety distance (see chapter 7.1.5 "Resolution and safety distance during fixed blanking").

General formula for calculating the safety distance S of an Optoelectronic Protective Device acc. to ISO 13855

$$S = K \cdot T + C$$

S	[mm]	=	Safety distance
K	[mm/s]	=	Approach speed
T	[s]	=	Total time of the delay, sum from ($t_a + t_i + t_m$)
t_a	[s]	=	Response time of the protective device

t_i	[s]	=	Response time of the safety relay
t_m	[s]	=	Stopping time of the machine
C	[mm]	=	Additional distance to the safety distance

NOTICE

If longer stopping times are determined during regular inspections, an appropriate additional time must be added to t_m.

7.1.2 Calculation of safety distance if protective fields act orthogonally to the approach direction

With vertical protective fields, ISO 13855 differentiates between

- S_{RT}: safety distance concerning access **through** the protective field
- S_{RO}: safety distance concerning access **over** the protective field

The two values are distinguished by the way additional distance C is determined:

- C_{RT}: from a calculation formula or as a constant (see chapter 7.1.1 "Calculation of safety distance S")
- C_{RO}: from the following table “Reaching over the vertical protective field of electro-sensitive protective equipment (excerpt from ISO 13855)”

The larger of the two values S_{RT} and S_{RO} is to be used.

Calculation of safety distance S_{RT} acc. to ISO 13855 when access occurs through the protective field:

Calculation of safety distance S_{RT} for point of operation guarding

$$S_{RT} = K \cdot T + C_{RT}$$

S_{RT}	[mm]	=	Safety distance
K	[mm/s]	=	Approach speed for point of operation guarding with approach reaction and normal approach direction to the protective field (resolution 14 to 40 mm): 2000 mm/s or 1600 mm/s, when S_{RT} > 500 mm
T	[s]	=	Total time of the delay, sum from (t_a + t_i + t_m)
t_a	[s]	=	Response time of the protective device
t_i	[s]	=	Response time of the safety relay
t_m	[s]	=	Stopping time of the machine
C_{RT}	[mm]	=	Additional distance for point of operation guarding with approach reaction with resolutions of 14 to 40 mm, d = resolution of protective device C_{RT} = 8 × (d - 14) mm

Calculation of safety distance S_{RT} for access guarding

$$S_{RT} = K \cdot T + C_{RT}$$

S_{RT}	[mm]	=	Safety distance
K	[mm/s]	=	Approach speed for access guarding with approach direction orthogonal to the protective field: 2000 mm/s or 1600 mm/s, when S_{RT} > 500 mm
T	[s]	=	Total time of the delay, sum from (t_a + t_i + t_m)
t_a	[s]	=	Response time of the protective device
t_i	[s]	=	Response time of the safety relay
t_m	[s]	=	Stopping time of the machine
C_{RT}	[mm]	=	Additional distance for access guarding with approach reaction with resolutions of 14 to 40 mm, d = resolution of protective device C_{RT} = 8 × (d - 14) mm. Additional distance for access guarding for resolutions > 40 mm: C_{RT} = 850 mm (standard value for arm length)

Calculation example

Access to a robot with a stopping time of 250 ms is to be safeguarded with a safety light curtain with 90 mm of resolution and 1500 mm of protective field height whose response time is 6 ms. The safety light curtain directly switches the contactors whose response time is contained in the 250 ms. An additional interface therefore does not have to be taken into consideration.

↳ Calculate safety distance S_{RT} using the formula acc. to ISO 13855.

$$S_{RT} = K \cdot T + C_{RT}$$

K	[mm/s]	=	1600
T	[s]	=	(0.006 + 0.250)
C_{RT}	[mm]	=	850
S_{RT}	[mm]	=	1600 mm/s × 0.256 s + 850 mm
S_{RT}	**[mm]**	**=**	**1260**

This safety distance is not available in the application. This is why a new calculation is done with a safety light curtain with 40 mm of resolution (response time = 14 ms):

↳ Re-calculate safety distance S_{RT} using the formula acc. to ISO 13855.

$$S_{RT} = K \cdot T + C_{RT}$$

K	[mm/s]	=	1600
T	[s]	=	(0.014 + 0.250)
C_{RT}	[mm]	=	8 ×~ (40 - 14)
S_{RT}	[mm]	=	1600 mm/s × 0.264 s + 208 mm
S_{RT}	**[mm]**	**=**	**631**

The safety light curtain with a 40 mm resolution is thus suitable for this application.

	NOTICE
	For the calculation with K = 2000 mm/s, safety distance S_{RT} equals 736 mm. The adoption of approach speed K = 1600 mm/s is therefore permitted.

Calculation of safety distance S_{Ro} acc. to ISO 13855 when protective field is accessed from above:

Calculation of safety distance S_{Ro} for point of operation guarding

$$S_{RO} = K \cdot T + C_{RO}$$

S_{RO}	[mm]	=	Safety distance
K	[mm/s]	=	Approach speed for point of operation guarding with approach reaction and normal approach direction to the protective field (resolution 14 to 40 mm): 2000 mm/s or 1600 mm/s, when S_{RO} > 500 mm
T	[s]	=	Total time of the delay, sum from (t_a + t_i + t_m)
t_a	[s]	=	Response time of the protective device
t_i	[s]	=	Response time of the safety relay
t_m	[s]	=	Stopping time of the machine
C_{RO}	[mm]	=	Additional distance in which a body part can move towards the protective device before the protective device triggers: value (see the following table “Reaching over the vertical protective field of electro-sensitive protective equipment (excerpt from ISO 13855)”).

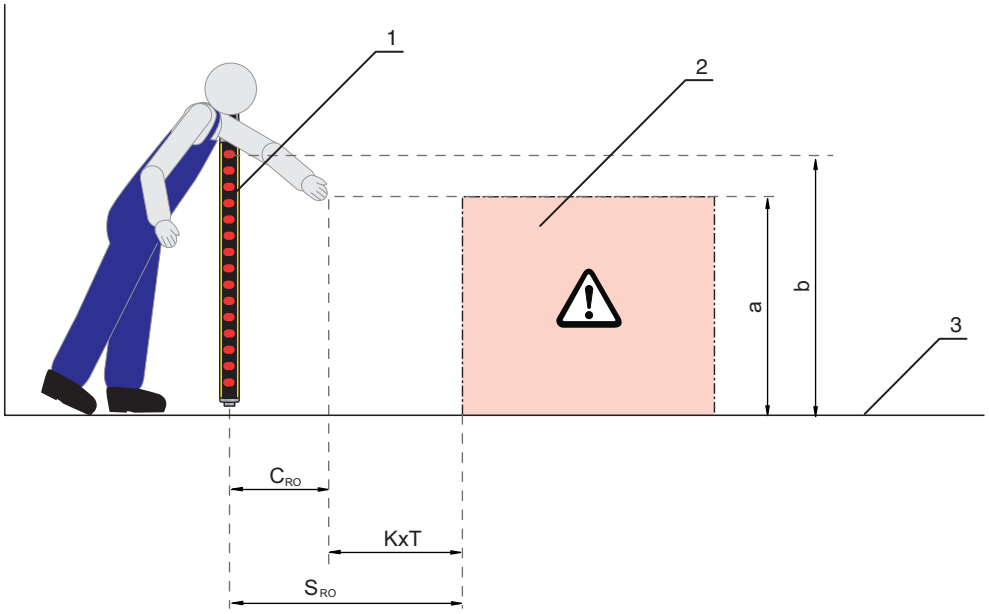

1	Safety sensor
2	Danger zone
3	Floor
a	Height of the point of operation
b	Height of the upper beam of the safety sensor

Fig. 7.1: Additional distance to the safety distance when reaching over and under

Tab. 7.1: Reaching over the vertical protective field of electro-sensitive protective equipment(excerpt from ISO 13855)

Height a of the point of operation [mm]	**Height b of the upper edge of the protective field of the electro-sensitive protective equipment**											
	900	**1000**	**1100**	**1200**	**1300**	**1400**	**1600**	**1800**	**2000**	**2200**	**2400**	**2600**
	Additional distance C_{RO} to the danger zone [mm]											
2600	0	0	0	0	0	0	0	0	0	0	0	0
2500	400	400	350	300	300	300	300	300	250	150	100	0
2400	550	550	550	500	450	450	400	400	300	250	100	0
2200	800	750	750	700	650	650	600	550	400	250	0	0

Height a of the point of operation [mm]	Height b of the upper edge of the protective field of the electro-sensitive protective equipment											
	900	1000	1100	1200	1300	1400	1600	1800	2000	2200	2400	2600
	Additional distance C_{RO} to the danger zone [mm]											
2000	950	950	850	850	800	750	700	550	400	0	0	0
1800	1100	1100	950	950	850	800	750	550	0	0	0	0
1600	1150	1150	1100	1000	900	850	750	450	0	0	0	0
1400	1200	1200	1100	1000	900	850	650	0	0	0	0	0
1200	1200	1200	1100	1000	850	800	0	0	0	0	0	0
1000	1200	1150	1050	950	750	700	0	0	0	0	0	0
800	1150	1050	950	800	500	450	0	0	0	0	0	0
600	1050	950	750	550	0	0	0	0	0	0	0	0
400	900	700	0	0	0	0	0	0	0	0	0	0
200	600	0	0	0	0	0	0	0	0	0	0	0
0	0	0	0	0	0	0	0	0	0	0	0	0

Depending on the specified values you can work with the above-mentioned table in three ways:

1. Given are:
   - Height a of the point of operation
   - Distance S of the point of operation from the safety sensor, and additional distance C_{RO}

To be determined is the required height b of the upper beam of the safety sensor and thereby its protective field height.

↳ Look for the line with the specification of the point of operation height in the left column.

↳ In this line, look for the column with the next highest specification for additional distance C_{RO}.

⇨ The required height of the upper beam of the safety sensor is up top in the column head.

2. Given are:
   - Height a of the point of operation
   - Height b of the upper beam of the safety sensor

To be determined is the required distance S of the safety sensor to the point of operation and thereby additional distance C_{RO}.

↳ In the column head, look for the column with the next lowest entry for the height of the upper beam of the safety sensor.

↳ Look for the line with the next highest specification of the point of operation height a in this column.

⇨ In the intersection point of the line and the column, you will find additional distance C_{RO}.

3. Given are:
   - Distance S of the point of operation from the safety sensor, and additional distance $C_{RO.}$
   - Height b of the upper beam of the safety sensor

To be determined is the permitted height a of the point of operation.

↳ In the column head, look for the column with the next lowest entry for the height of the upper beam of the safety sensor.

↳ Look for the next lowest value for real additional distance C_{RO} in this column.

⇨ In this line, go to the left column: here you will find the permitted height of the point of operation.

↳ Now calculate safety distance S using the general formula acc. to ISO 13855 (see chapter 7.1.1 "Calculation of safety distance S").

⇨ The larger of the two values S_{RT} and S_{RO} is to be used.

Calculation example

The feeding-in area in a press with a stopping time of 130 ms is to be safeguarded with a safety light curtain with 20 mm of resolution and 600 mm of protective field height. The response time of the safety light curtain is 12 ms; the press Safety PLC has a response time of 40 ms.

The safety sensor can be reached over. The upper edge of the protective field is located at a height of 1400 mm; the point of operation is located at a height of 1000 mm

Additional distance C_{RO} to the point of operation is 700 mm (see table “Reaching over the vertical protective field of electro-sensitive protective equipment (excerpt from ISO 13855)”).

↳ Calculate safety distance S_{RO} using the formula acc. to ISO 13855.

$$S_{RO} = K \cdot T + C_{RO}$$

K	[mm/s]	=	2000
T	[s]	=	(0.012 + 0.040 + 0.130)
C_{RO}	[mm]	=	700
S_{RO}	[mm]	=	2000 mm/s × 0.182 s + 700 mm
S_{RO}	**[mm]**	**=**	**1064**

S_{RO} is larger than 500 mm; this is why the calculation may be repeated with approach speed 1600 mm/s:

$$S_{RO} = K \cdot T + C_{RO}$$

K	[mm/s]	=	1600
T	[s]	=	(0.012 + 0.040 + 0.130)
C_{RO}	[mm]	=	700
S_{RO}	[mm]	=	1600 mm/s × 0.182 s + 700 mm
S_{RO}	**[mm]**	**=**	**992**

NOTICE

Depending on the machine construction, stepping behind protection, e.g. using a second horizontally arranged safety light curtain, is necessary. In most cases, it will be more appropriate to choose a longer safety light curtain which makes the additional distance C_{RO} equal to 0.

7.1.3 Calculation of safety distance S for parallel approach to the protective field

Calculation of safety distance S for danger zone guarding

$$S = K \cdot T + C$$

S	[mm]	=	Safety distance
K	[mm/s]	=	Approach speed for danger zone guarding with approach direction parallel to the protective field (resolution up to 90 mm): 1600 mm/s
T	[s]	=	Total time of the delay, sum from (t_a + t_i + t_m)
t_a	[s]	=	Response time of the protective device
t_i	[s]	=	Response time of the safety relay
t_m	[s]	=	Stopping time of the machine
C	[mm]	=	Additional distance for danger zone guarding with approach reaction H = height of the protective field, H_{min} = minimum installation height permitted, but no smaller than 0, d = resolution of the protective device C = 1200 mm - 0.4 × H; H_{min} = 15 × (d - 50)

Calculation example

The danger zone in front of a machine with a stopping time of 140 ms is to be safeguarded as close to the floor height as possible using a horizontal safety light curtain as a replacement for a PS mat. Installation height H_{min} can be = 0 - additional distance C to the safety distance is then 1200 mm. The shortest possible safety sensor is to be used; the first value to be selected is to be 1350 mm.

The receiver with 40 mm of resolution and 1350 mm protective field height has a response time of 13 ms, an additional relay interface a response time of 10 ms.

↳ Calculate safety distance S_{RO} using the formula acc. to ISO 13855.

$$S = K \cdot T + C$$

K	[mm/s]	=	1600
T	[s]	=	(0.140 + 0.013 + 0.010)
C	[mm]	=	1200
S	[mm]	=	1600 mm/s × 0.163 s + 1200 mm
S	**[mm]**	**=**	**1461**

The safety distance of 1350 mm is not sufficient; 1460 mm are necessary.

This is why the calculation is repeated with a protective field height of 1500 mm. The response time is now 14 ms.

↳ Re-calculate safety distance S_{RO} using the formula acc. to ISO 13855.

$$S = K \cdot T + C$$

K	[mm/s]	=	1600
T	[s]	=	(0.140 + 0.014 + 0.010)
C	[mm]	=	1200
S	[mm]	=	1600 mm/s × 0.164 s + 1200 mm
S	**[mm]**	**=**	**1463**

A suitable safety sensor has been found; its protective field height is 1500 mm.

The following changes should now be taken into account in this example of the application conditions:

Small parts are occasionally thrown out of the machine; these can fall through the protective field. This should not trigger the safety function. In addition, the installation height is increased to 300 mm.

MaxiScan

$$S = K \cdot T + C$$

K	[mm/s]	=	1600
T	[s]	=	(0.140 + 0.100 + 0.010)
C	[mm]	=	1200 - 0.4 × 300
S	[mm]	=	1600 mm/s × 0.250 s + 1080 mm
S	**[mm]**	**=**	**1480**

7.1.4 Minimum distance to reflective surfaces

WARNING

Failure to maintain minimum distances to reflective surfaces may result in serious injury!

Reflective surfaces can indirectly deflect the transmitter beams to the receiver. In this case, interruption of the protective field is not detected.

- Determine the minimum distance a (see figure below).
- Make certain that all reflective surfaces are the necessary minimum distance away from the protective field according to IEC 61496-2 (see the following diagram “Minimum distance to reflective surfaces as a function of the protective field width”).
- Check that reflective surfaces do not impair the detection capability of the safety sensor before start-up and at appropriate intervals.

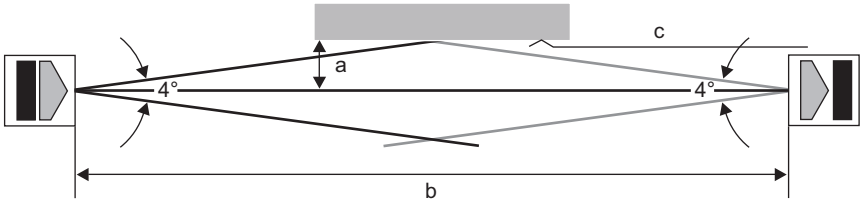

a Required minimum distance to reflective surfaces [mm]
b Protective field width [m]
c Reflective surface

Fig. 7.2: Minimum distance to reflective surfaces depending on protective field width

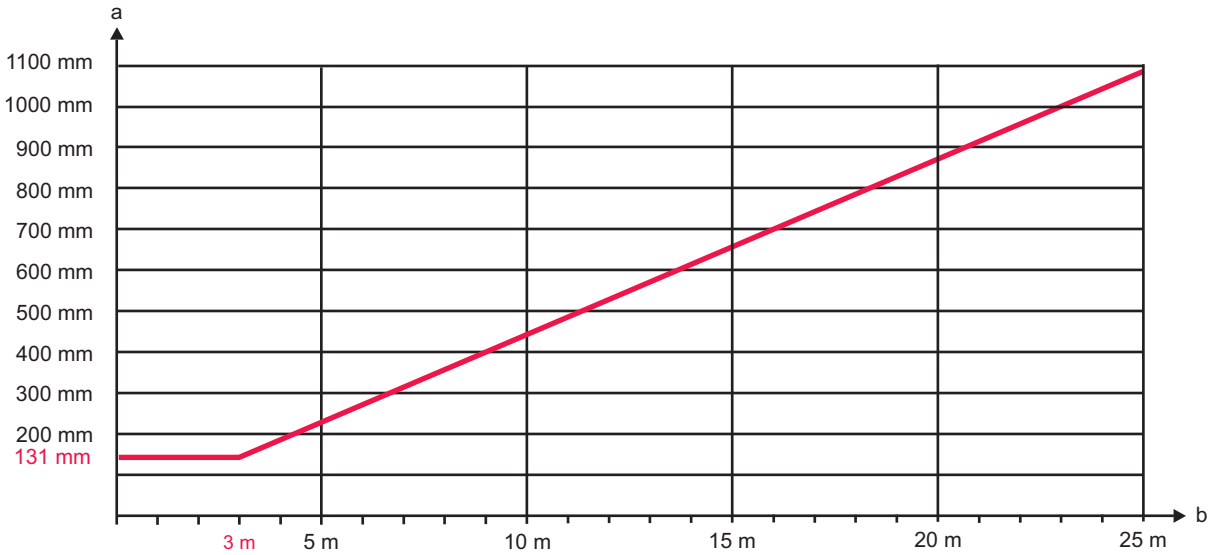

a Required minimum distance to reflective surfaces [mm]
b Protective field width [m]

Fig. 7.3: Minimum distance to reflective surfaces as a function of the protective field width

Tab. 7.2: Formula for calculating the minimum distance to reflective surfaces

Distance (b) transmitter-receiver	Calculation of the minimum distance (a) to reflective surfaces
b ≤ 3 m	a [mm] = 131
b > 3 m	a [mm] = tan(2.5°) × 1000 × b [m] = 43.66 × b [m]

7.1.5 Resolution and safety distance during fixed blanking

The calculation of the safety distance must always be based on the effective resolution. If the effective resolution deviates from the physical resolution, this must be documented near the protective device on the supplied sign in a lasting, wipe-resistant manner.

Tab. 7.3: Effective resolution and additional distance to the safety distance during fixed blanking with ±1 beam size tolerance for access guarding in accordance with ISO 13855 when approaching the protective field orthogonally

Physical resolution	Effective resolution on the object edges	Additional distance to the safety distance C = 8 × (d-14) or 850 mm
14 mm	34 mm	160 mm
20 mm	45 mm	850 mm
30 mm	80 mm	850 mm
40 mm	83 mm	850 mm
90 mm	283 mm	850 mm

WARNING

Faulty application of blanking functions may result in serious injury!

↳ Note that the additional distances to the safety distance may require additional measures be taken for preventing stepping behind.

7.1.6 Preventing mutual interference between adjacent devices

If a receiver is located in the beam path of an adjacent transmitter, optical crosstalk, and thus erroneous switching and failure of the protective function, may result.

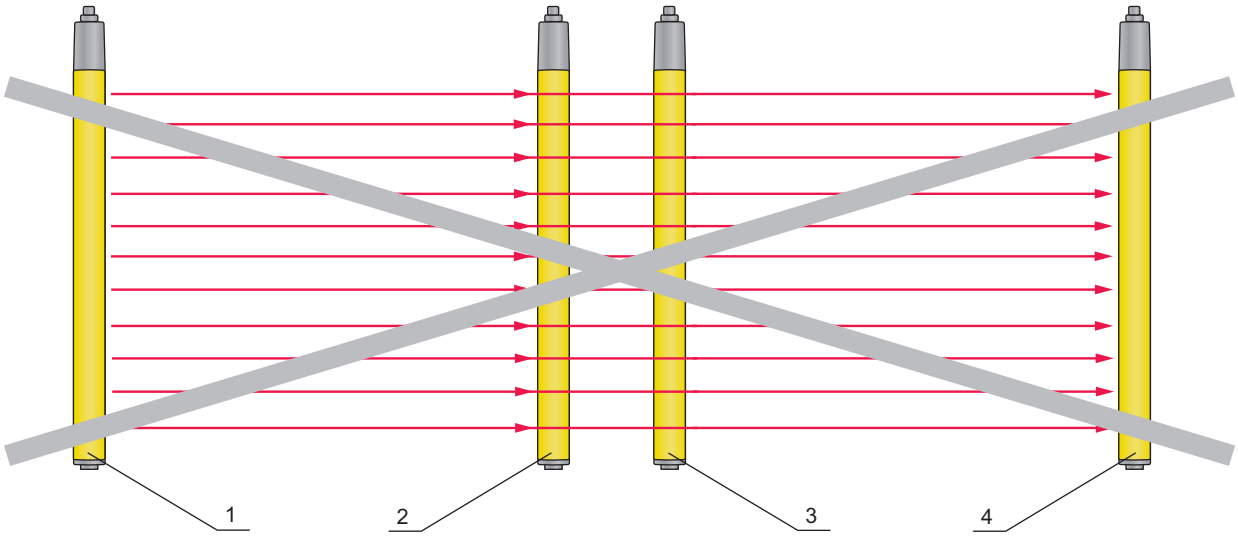

Fig. 7.4: Optical crosstalk between adjacent safety sensors (transmitter 1 influences receiver 2) due to incorrect mounting

1 Transmitter 1
2 Receiver 1
3 Transmitter 2
4 Receiver 2

NOTICE

Possible impairment of the availability due to systems mounted close to each other!

The transmitter of one system can influence the receiver of the other system.

↳ Prevent optical crosstalk between adjacent devices.

↳ Mount adjacent devices with a shield between them or install a dividing wall to prevent mutual interference.

↳ Mount the adjacent devices opposite from one another to prevent mutual interference.

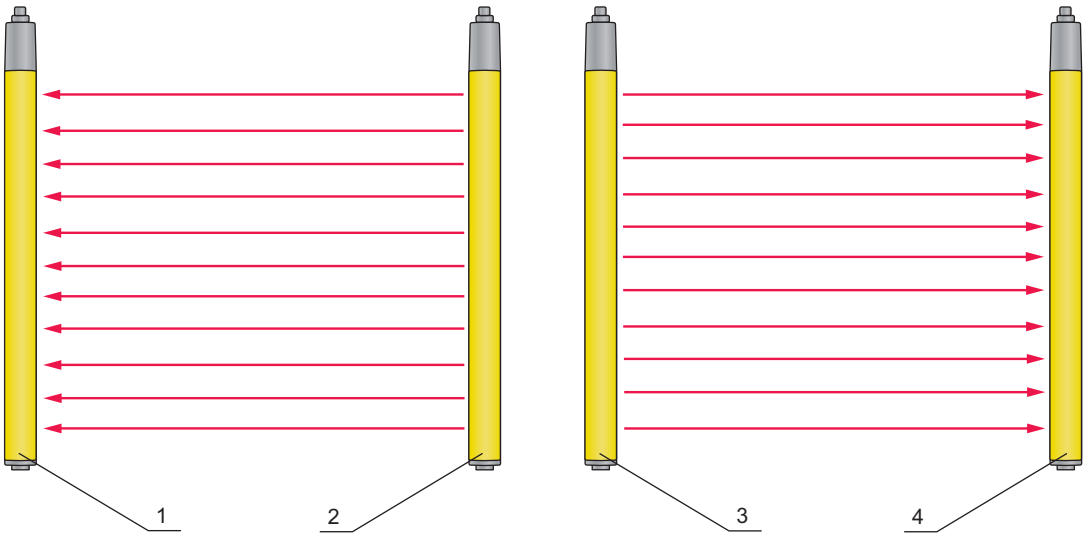

Fig. 7.5: Opposite mounting

1 Receiver 1
2 Transmitter 1
3 Transmitter 2

4 Receiver 2

In addition to design characteristics, the safety sensor offers functions that can remedy this:

- Selectable transmission channels (see chapter 5.2 "Transmission channel changeover")
- Range reduction (Range reduction)
- Also: opposite mounting

7.2 Mounting the safety sensor

Proceed as follows:

- Select the type of fastening, e.g. swivel mount or swiveling mounting bracket (see chapter 7.2.4 "Fastening via BT-2HF swivel mount"orsee chapter 7.2.5 "Fastening via BT-2SB10 swiveling mounting brackets")
- Have a suitable tool at hand and mount the safety sensor in accordance with the notices regarding the mounting locations (see chapter 7.2.1 "Suitable mounting locations").
- If possible, affix safety notice stickers on the mounted safety sensor or device column (included in delivery contents).

After mounting, you can electrically connect (see chapter 8 "Electrical connection"), start up, align (see chapter 9 "Starting up the device"), and test (see chapter 10.1 "Before commissioning and following modifications") the safety sensor.

7.2.1 Suitable mounting locations

Area of application: Mounting

Tester: Technician who mounts the safety sensor

Tab. 7.4: Checklist for mounting preparations

Check:	Yes	No
Do the protective field height and dimensions satisfy the requirements of ISO 13855?		
Is the safety distance to the point of operation maintained (see chapter 7.1.1 "Calculation of safety distance S")?		
Is the minimum distance to reflective surfaces maintained (see chapter 7.1.4 "Minimum distance to reflective surfaces")?		
Is it impossible for safety sensors that are mounted next to one another to mutually interfere with one another (see chapter 7.1.6 "Preventing mutual interference between adjacent devices")?		
Can the point of operation or the danger zone only be accessed through the protective field?		
Has bypassing the protective field by crawling under, reaching over, or jumping over been prevented or has corresponding additional distance C_{RO} in accordance with ISO 13855 been observed?		
Is stepping behind the protective device prevented or is mechanical protection available?		
Do the transmitter and receiver connections point in the same direction?		
Can the transmitter and receiver be fastened in such a way that they cannot be moved and turned?		
Is the safety sensor accessible for testing and replacing?		
Is it impossible to actuate the reset button from within the danger zone?		
Can the entire danger zone be seen from the installation site of the reset button?		
Can reflection caused by the installation site be ruled out?		

Observe the additional information on Smart Process Gating (Smart Process Gating).

NOTICE

If you answer one of the items on the checklist above with **no**, the mounting location must be changed.

7.2.2 Definition of directions of movement

The following terms for alignment movements of the safety sensor around one of its axes are used:

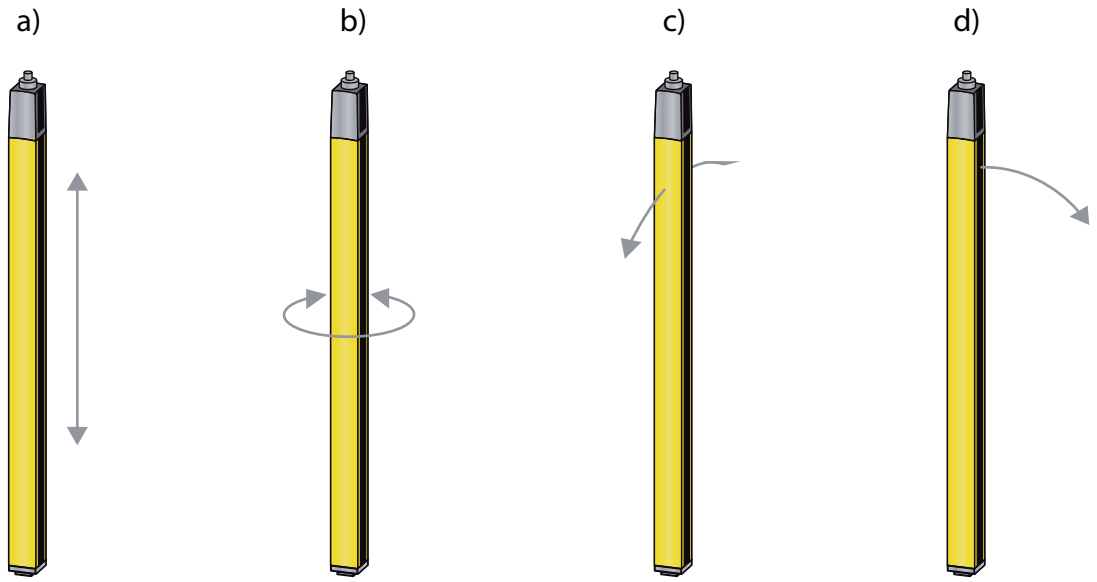

a	Sliding: movement along the longitudinal axis
b	Turning: movement around the longitudinal axis
c	Tilting: lateral turning movement diagonal to the front screen
d	Pitching: lateral turning movement in the direction of the front screen

Fig. 7.6: Directions of movement during alignment of the safety sensor

7.2.3 Fastening via BT-NC60 sliding blocks

By default, transmitter and receiver are delivered with 2 BT-NC60 sliding blocks each in the side slot. This makes fastening the safety sensor to the machine or system to be safeguarded easy via four M6 screws. Sliding in the direction of slot to set the height is possible, but turning, tilting and pitching is not.

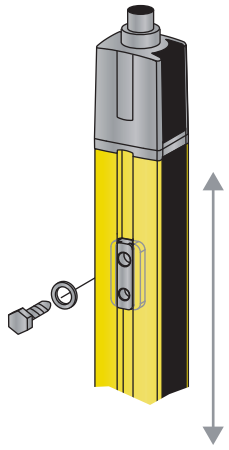

Fig. 7.7: Mounting via sliding blocks BT-NC60

7.2.4 Fastening via BT-2HF swivel mount

With the swivel mount (see chapter 16 "Order guide and accessories"), sold separately, the safety sensor can be aligned as follows:

- Sliding through the vertical threaded holes in the wall plate of the swivel mount
- Turning by 360° around the longitudinal axis by fixing on the screw-on cone
- Pitching in the direction of the protective field with horizontal threaded holes in the wall mounting
- Tilting around main axis

The wall mounting through threaded holes makes it possible to lift the mounting bracket after the screws have been loosened over the connection cap. Therefore, the mounting brackets do not need to be removed from the wall when exchanging the device. Loosening the screws is sufficient.

For increased mechanical loads, mounting brackets are also available in a vibration-damped version (BT-2HF-S) (see chapter 16 "Order guide and accessories").

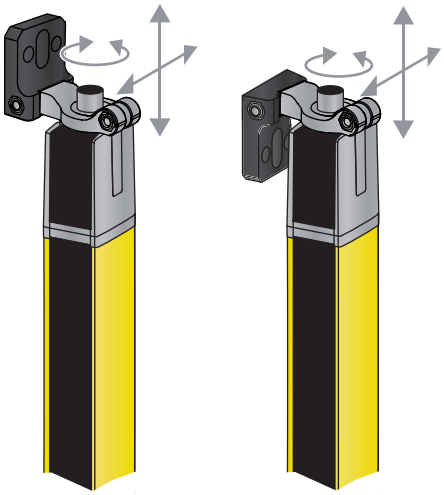

Fig. 7.8: Mounting via swivel mount BT-2HF

7.2.5 Fastening via BT-2SB10 swiveling mounting brackets

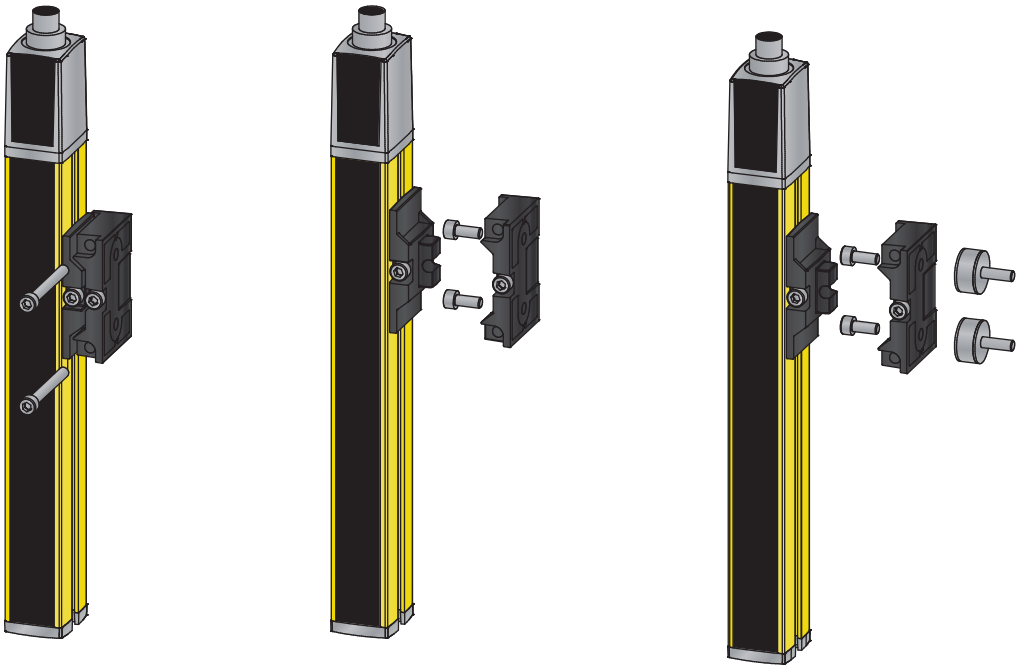

Fig. 7.9: Mounting via swiveling mounting brackets BT-2SB10

For larger protective field heights > 900 mm, the use of the BT-2SB10 swiveling mounting brackets is recommended (see chapter 16 "Order guide and accessories"). For increased mechanical requirements, these are also available as vibration-damped version (BT-2SB10-S). Depending on the installation situation, environmental conditions and protective field length (> 1200 mm), other mounting brackets may also be necessary.

7.2.6 One-sided mounting on the machine table

The safety sensor can be mounted directly on the machine table via an M5 screw on the blind hole in the end cap. On the other end, a BT-2HF swivel mount can be used, for example, so that turning movements for alignment are possible despite the fact that the sensor is mounted on one side. The full resolution of the safety sensor is thus preserved on all points of the protective field down to the machine table.

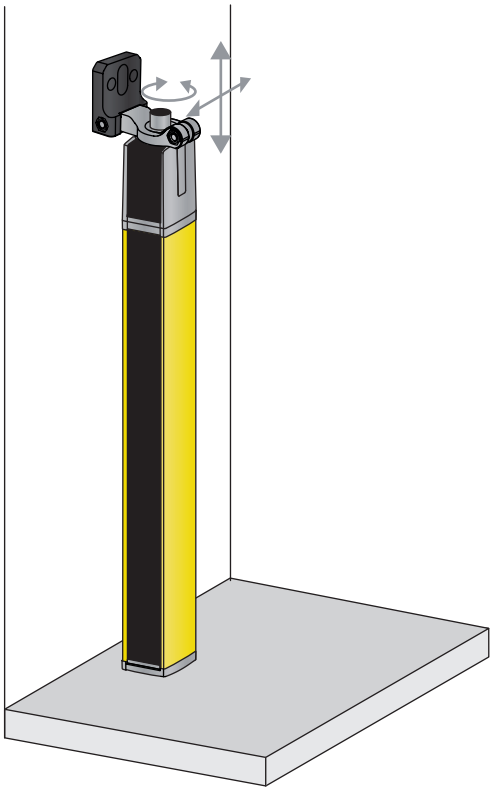

Fig. 7.10: Mounting directly on the machine table

WARNING	
	Impairment of the protective function due to reflections on the machine table! ↳ Make sure that reflections on the machine table are prevented reliably. ↳ After mounting and every day after that, check the detection capability of the safety sensor in the entire protective field using a test rod (see chapter 10.3.1 "Checklist – periodically by the operator").

8 Electrical connection

WARNING

Faulty electrical connection or improper function selection may result in serious injury!

- Only allow qualified persons (see chapter 2.2 "Necessary competencies") to perform the electrical connection.
- Make certain that the safety sensor is protected against overcurrent.
- For access guarding, activate the start/restart interlock and make certain that it cannot be unlocked from within the danger zone.
- Select the functions so that the safety sensor can be used as intended (see chapter 2.1 "Intended use and foreseeable misuse").
- Select the safety-relevant functions for the safety sensor (see chapter 5 "Functions").
- Always loop both safety-related switching outputs OSSD1 and OSSD2 into the work circuit of the machine.
- Signal outputs must not be used for switching safety-relevant signals.

NOTICE

SELV/PELV!

- Acc. to EN 60204-1, the external power supply must demonstrate the ability to bridge short-term mains failures of up to 20 ms. The power supply unit must ensure safe mains separation (SELV/PELV) and a current reserve of at least 2 A.

NOTICE

Laying cables!

- Lay all connection cables and signal lines within the electrical installation space or permanently in cable ducts.
- Lay the cables and lines so that they are protected against external damages.
- For further information: see ISO 13849-2, Table D.4.

NOTICE

Device connection!

- Use shielded cables for device connection.

NOTICE

Reset!

Pin1 of the receiver is a clocked input and output. It is thus not possible to couple the reset signal with other devices. This can result in an erroneous, automatic reset trigger.

8.1 Pin assignment transmitter and receiver

8.1.1 MLC 500 transmitter

MLC 500 transmitters are equipped with a 5-pin M12 connector.

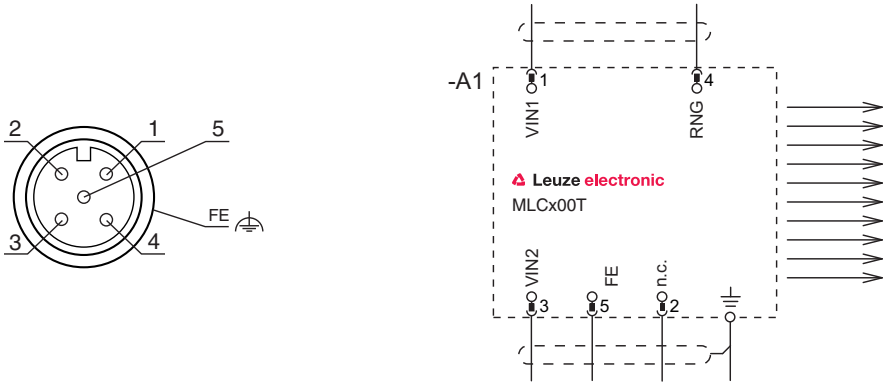

Fig. 8.1: Pin assignment and connection diagram transmitter

Tab. 8.1: Pin assignment transmitter

Pin	Core color (CB-M12-xx000E-5GF)	Transmitter
1	Brown	VIN1 - supply voltage
2	White	n.c.
3	Blue	VIN2 - supply voltage
4	Black	RNG - range
5	Gray	FE - functional earth, shield
FE		FE - functional earth, shield

The polarity of the supply voltage selects the transmission channel of the transmitter:

- VIN1 = +24 V, VIN2 = 0 V: transmission channel C1
- VIN1 = 0 V, VIN2 = +24 V: transmission channel C2

The wiring of pin 4 determines the transmitting power and thereby the range:

- Pin 4 = +24 V: standard range
- Pin 4 = 0 V or open: reduced range

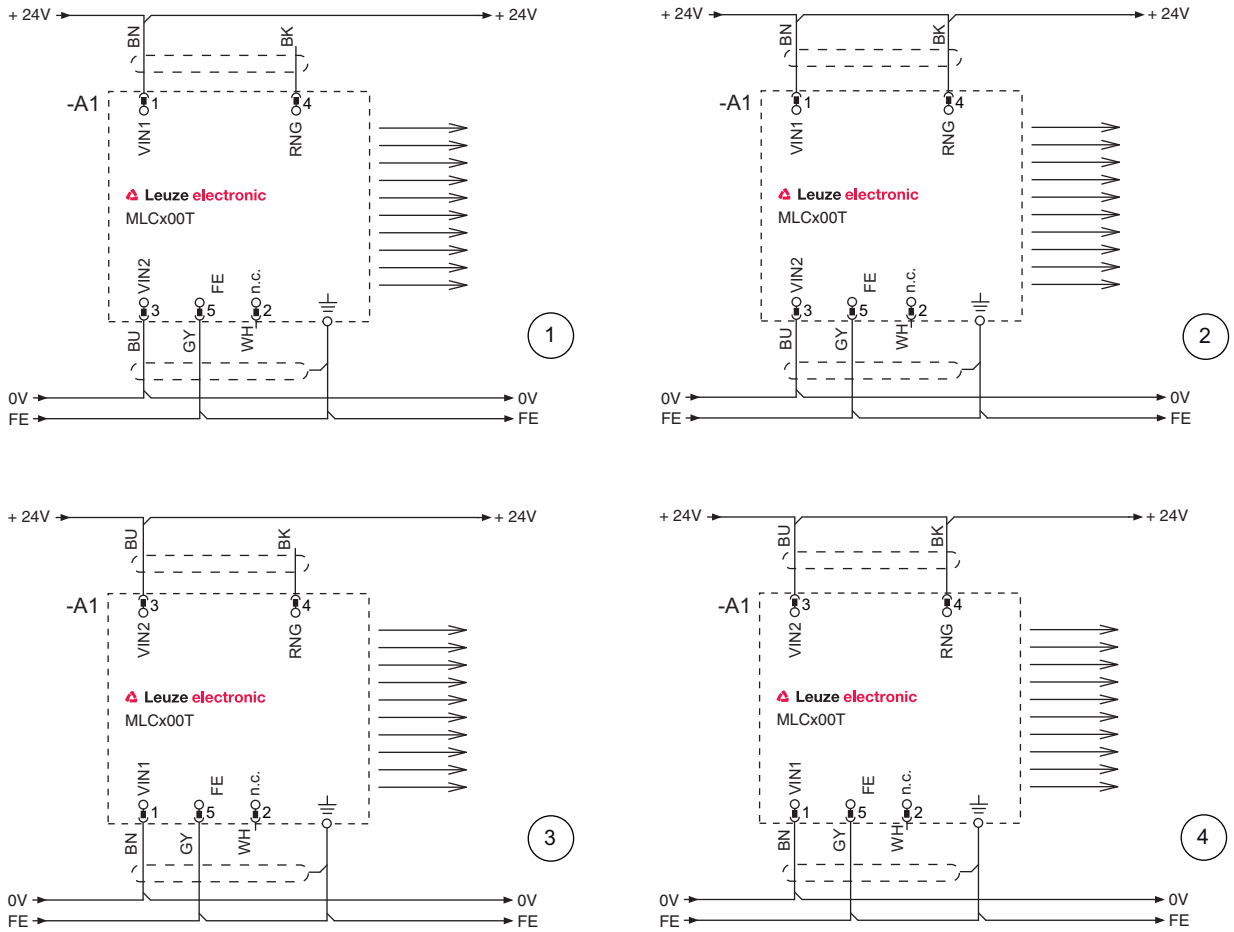

1 Transmission channel C1, reduced range
2 Transmission channel C1, standard range
3 Transmission channel C2, reduced range
4 Transmission channel C2, standard range

Fig. 8.2: Connection examples transmitter

8.1.2 MLC 530 SPG receiver

MLC 530 SPG receivers are equipped with a 8-pin M12 connector.

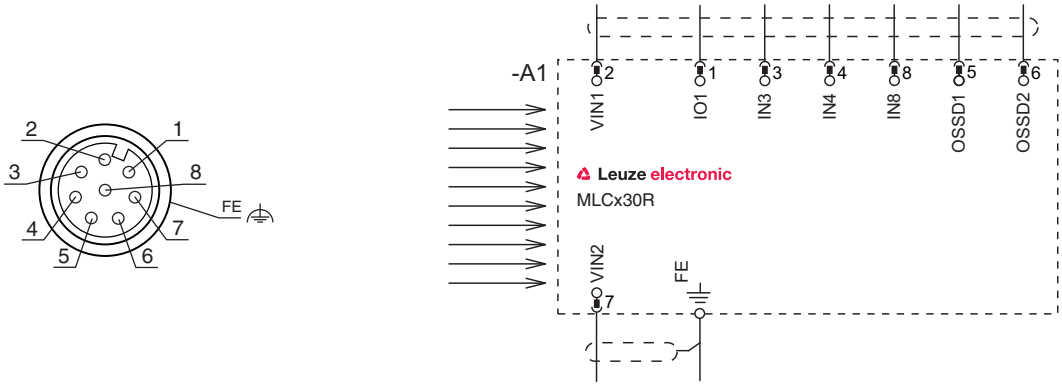

Fig. 8.3: Pin assignment and connection diagram receiver

Tab. 8.2: Pin assignment receiver

Pin	Core color (CB-M12-xx000E-5GF)	Receiver
1	White	IO1 - control-input function selection, control-input reset button, signal output
2	Brown	VIN1 - supply voltage
3	Green	IN3 - control input
4	Yellow	IN4 - control input
5	Gray	OSSD1 - safety-related switching output
6	Pink	OSSD2 - safety-related switching output
7	Blue	VIN2 - supply voltage
8	Red	IN8 - control input
FE		FE - functional earth, shield

8.2 Operating mode 1

SPG with qualified stop function (see chapter 4.4.1 "Operating mode 1 - Qualified stop")

Tab. 8.3: Pin assignment operating mode 1

Pin	Color	General desc.	Wiring
1	White	IO1/RES	Pin 8 (bridge)
2	Brown	VIN1	0 V
3	Green	IN3	CS
4	Yellow	IN4	TH
5	Gray	OSSD1	OSSD1
6	Pink	OSSD2	OSSD2
7	Blue	VIN2	24 V
8	Red	IN8	Pin 1 (bridge)
FE	-	FE	FE

NOTICE

Teach blanking by opening the bridge between pin 1 and pin 8 with a teach key switch and applying a voltage of +24 V to pin 1 and a voltage of 0 V to pin 8.

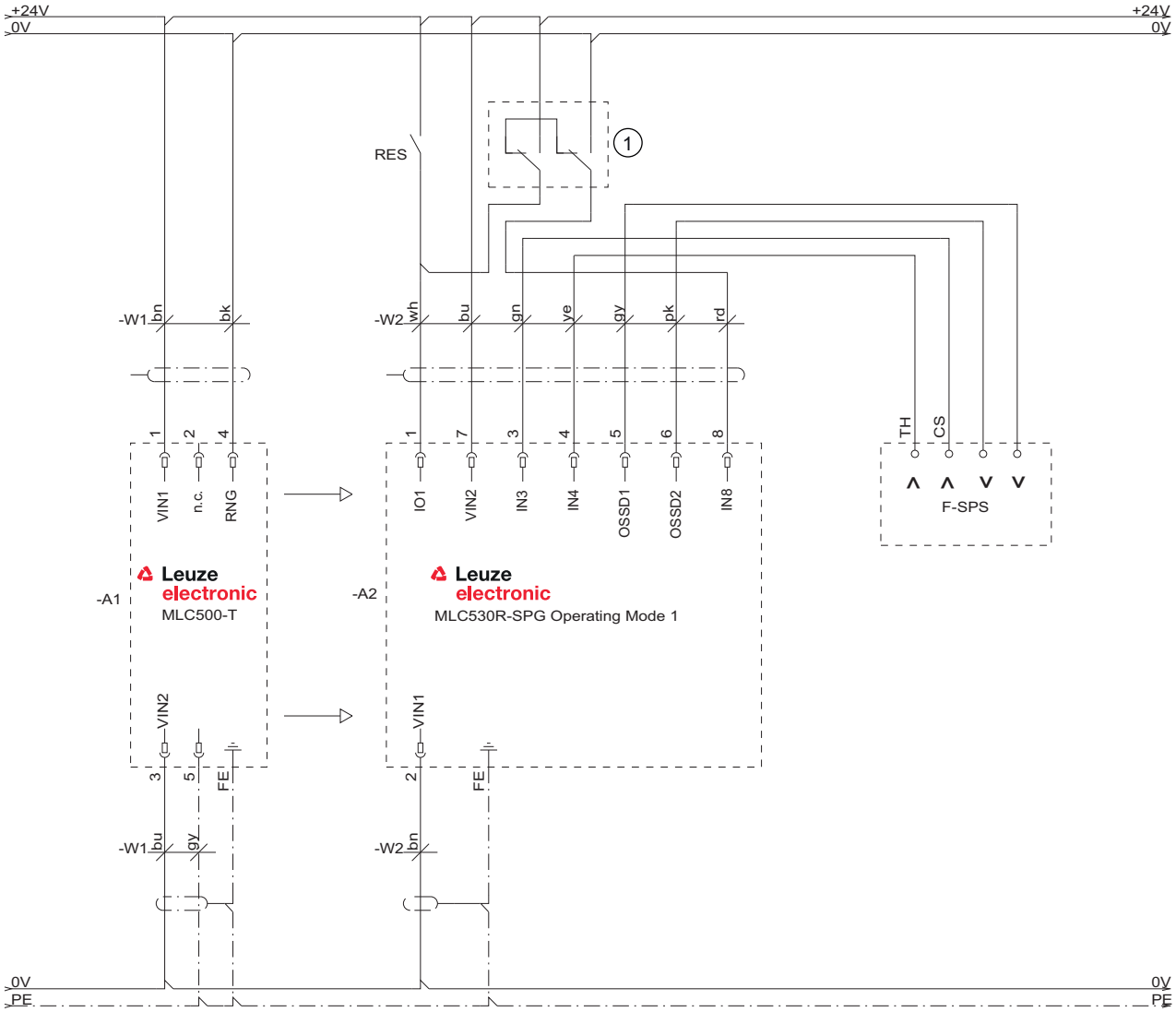

1 Optional teach key switch

Fig. 8.4: Operating mode 1: connection example with Smart Process Gating (SPG)

8.3 Operating mode 5

see chapter 4.4.2 "Operating mode 5 - Standard"

Tab. 8.4: Pin assignment operating mode 5

Pin	Color	General desc.	Wiring
1	White	IO1/RES	Pin 4 (bridge)
2	Brown	VIN1	24 V
3	Green	IN3	CS
4	Yellow	IN4	Pin 1 (bridge)
5	Gray	OSSD1	OSSD1
6	Pink	OSSD2	OSSD2

Pin	Color	General desc.	Wiring
7	Blue	VIN2	0 V
8	Red	IN8	TH
FE	-	FE	FE

NOTICE

The timeout of 10 minutes can optionally be extended by another control signal (TH timer hold signal) from the control to up to 100 hours (see chapter 4.5.2 "Gating timeout extension").

NOTICE

Teach blanking by opening the bridge between pin 1 and pin 4 with a teach key switch and applying a voltage of +24 V to pin 1 and a voltage of 0 V to pin 4.

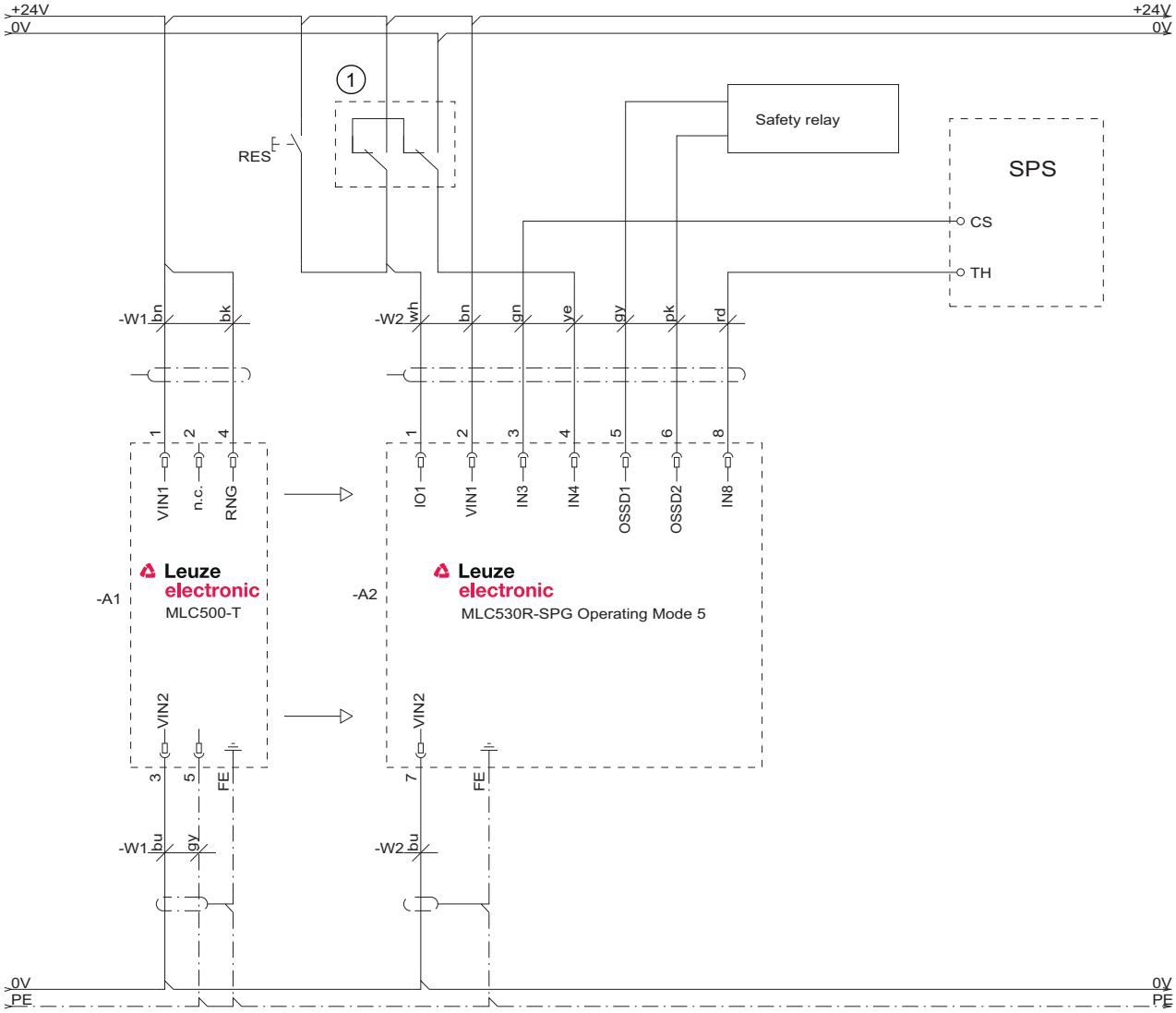

1 Optional teach key switch

Fig. 8.5: Operating mode 5: circuit diagram example with Smart Process Gating (SPG)

8.4 Operating mode 6

Partial gating (see chapter 4.4.3 "Operating mode 6 - Partial gating")

Tab. 8.5: Pin assignment operating mode 6

Pin	Color	General desc.	Wiring
1	White	IO1	PIN 3 (bridge)
2	Brown	VIN1	24 V
3	Green	IN3	PIN 1 (bridge)
4	Yellow	IN4	CS
5	Gray	OSSD1	OSSD1
6	Pink	OSSD2	OSSD2
7	Blue	VIN2	0 V
8	Red	IN8	TH
FE	-	FE	FE

NOTICE

Teach blanking by opening the bridge between pin 1 and pin 3 with a teach key switch and applying a voltage of +24 V to pin 1 and a voltage of 0 V to pin 3.

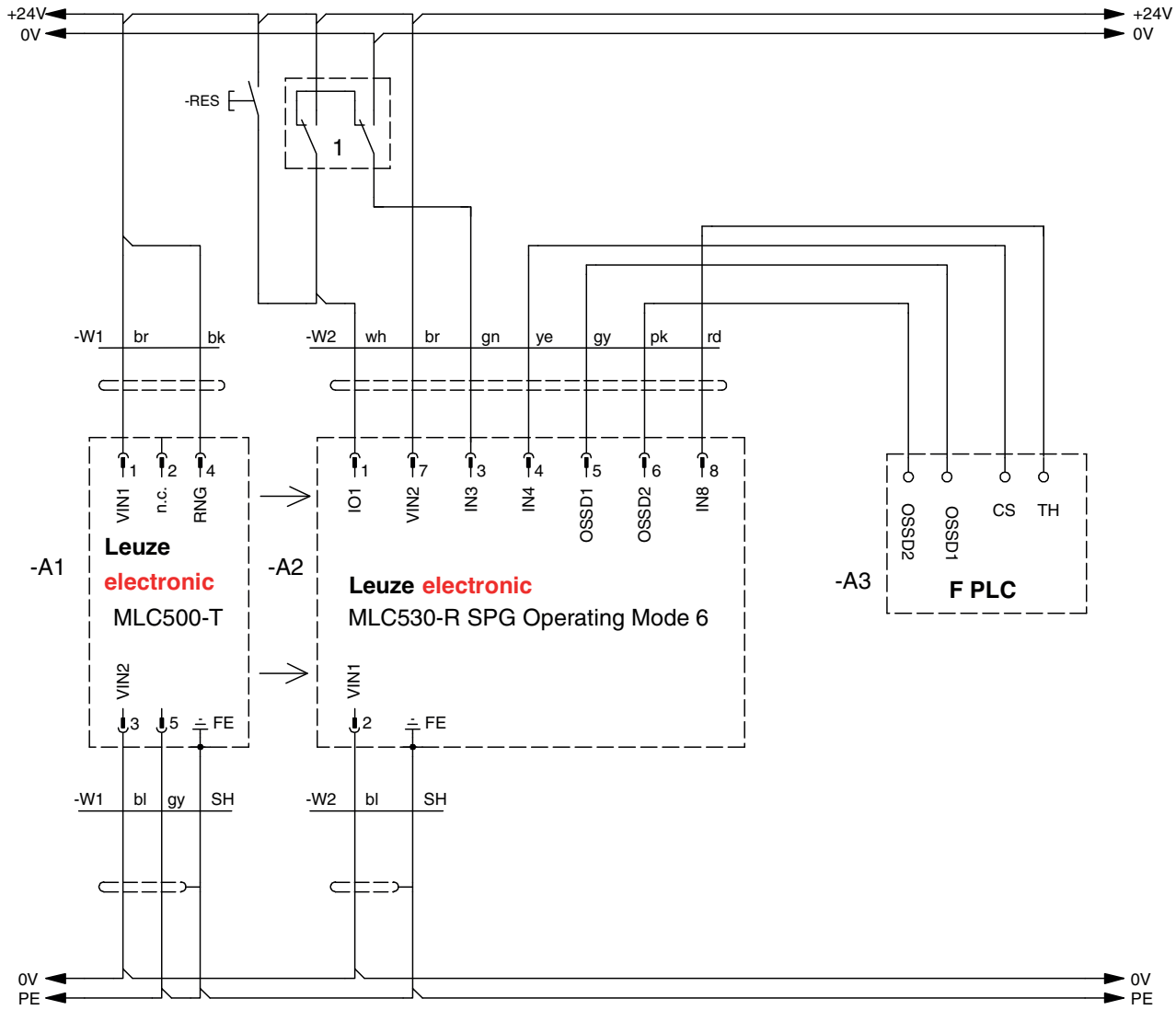

1 Optional teach key switch

Fig. 8.6: Operating mode 6: circuit diagram example with Smart Process Gating (SPG)

9 Starting up the device

WARNING

Improper use of the safety sensor may result in serious injury!

- Make certain that the entire device and the integration of the optoelectronic protective device were inspected by qualified and instructed persons (see chapter 2.2 "Necessary competencies").
- Make certain that a dangerous process can only be started while the safety sensor is switched on.

Prerequisites:

- Safety sensor mounted (see chapter 7 "Mounting") and connected (see chapter 8 "Electrical connection") correctly
- Operating personnel were instructed in proper use
- Dangerous process is switched off, outputs of the safety sensor are disconnected, and the system is protected against being switched back on

- After start-up, check the function of the safety sensor (see chapter 10.1 "Before commissioning and following modifications").

9.1 Switching on

Requirements for the supply voltage (power supply unit):

- Reliable mains separation is ensured.
- Current reserve of at least 2 A is available.
- The RES function is activated - either in the safety sensor or in the downstream control.

- Switch on the safety sensor.
- ⇨ The safety sensor performs a self test and then displays the response time of the receiver.

Check operational readiness of sensor

- Check whether LED2 illuminates yellow constantly (see chapter 3.3.2 "Operating indicators on the MLC 530 SPG receiver").
- ⇨ The safety sensor is ready to be unlocked.

9.2 Aligning the sensor

NOTICE

Faulty or incorrect alignment may result in an operating fault!

- The alignment performed during start-up should only be performed by qualified persons (see chapter 2.2 "Necessary competencies").
- Observe the data sheets and mounting instructions of the individual components.

Prealignment

Fasten the transmitter and receiver in a vertical or horizontal position and at the same height so that

- the front screens are directed at each other.
- the transmitter and receiver connections point in the same direction.
- the transmitter and receiver are arranged parallel to each other, i.e. they are the same distance from each other at the beginning and end of the device.

Alignment can be performed with a clear protective field by observing the LEDs and the 7-segment display (see chapter 3.3 "Display elements").

↳ Loosen the screws on the mounting brackets or device columns.

NOTICE
Loosen the screws only enough so that the devices can just be moved.

↳ Turn the transmitter and receiver toward one another so that LED2 on the receiver just illuminates yellow and does not switch off (see chapter 3.3.2 "Operating indicators on the MLC 530 SPG receiver").

⇨ The receiver with activated alignment display shows flashing segments in the 7-segment display.

↳ Tighten the fastening screws on the mounting brackets or device columns.

NOTICE
Separate alignment aids such as the AC-ALM are also available as accessories.

9.3 Acknowledgement button

NOTICE
Reset! Pin1 of the receiver is a clocked input and output. It is thus not possible to couple the reset signal with other devices. This can result in an erroneous, automatic reset trigger.

9.3.1 Unlocking start/restart interlock

With the acknowledgement button, the start/restart interlock can be unlocked or an gating restart or override triggered. In this way, the responsible person can restore the ON state of the safety sensor following process interruptions (due to triggering of protective function, failure of the voltage supply, gating errors) (see chapter 4.5.4 "Gating restart", see chapter 4.5.5 "Override").

WARNING
Premature unlocking of the start/restart interlock may result in serious injury! If the start/restart interlock is unlocked, the system can start up automatically. ↳ Before unlocking the start/restart interlock, make certain that no people are in the danger zone.

The red LED of the receiver illuminates as long as the restart is locked (OSSD off). The yellow LED illuminates when the protective field is free and RES is activated (ready to be unlocked).

↳ Make certain that the active protective field is clear.

↳ Make certain that there are no people in the danger zone.

↳ Press and release the reset button within 0.15 to 4 s. The receiver switches to the ON state.

If you keep the reset button pressed longer than 4 s:

- Starting at 4 s: the reset request is ignored.
- Starting at 30 s: a +24 V short circuit is assumed on the reset input and the receiver switches to the interlock state (see chapter 12.1 "What to do in case of failure?").

NOTICE
An individual acknowledgement unit must be provided for each MLC 530 receiver.

9.3.2 Gating restart and override

In the event of an error in the gating sequence (e.g.: timeout, failure of the supply voltage, sequence error, etc.), the gating function can be triggered manually and the system started even with light axes of the safety sensor interrupted. Interfering objects can thereby again be cleared. A CS switching signal must be present. In operating modes 1 and 6, the antivalent TH timer hold signal is to be applied in addition to the CS switching signal.

	WARNING
	Premature unlocking of the start/restart interlock may result in serious injury! If the start/restart interlock is unlocked, the system can start up automatically. ↳ Before unlocking the start/restart interlock, make certain that the cause of locking (e.g., sequence error) has been rectified. ↳ Before unlocking the start/restart interlock, make certain that no people are in the danger zone.

Depending on whether or not the synchronization beams are occupied, a gating restart (see chapter 4.5.4 "Gating restart") or override (see chapter 4.5.5 "Override") is to be performed.

9.4 Teaching of fixed blanking areas

Objects for "fixed blanking" cannot change their position during the teach event. The object must have a minimum size corresponding to the physical resolution of the ESPE. Teaching is done in the following steps:

- Initiating by actuating and releasing the teach key switch
- Accepting by actuating and releasing the teach key switch after 60 s or less.

A new teach event deletes the previously taught state. If the “Fixed blanking” function is to be deselected, this can be done by teaching a free protective field.

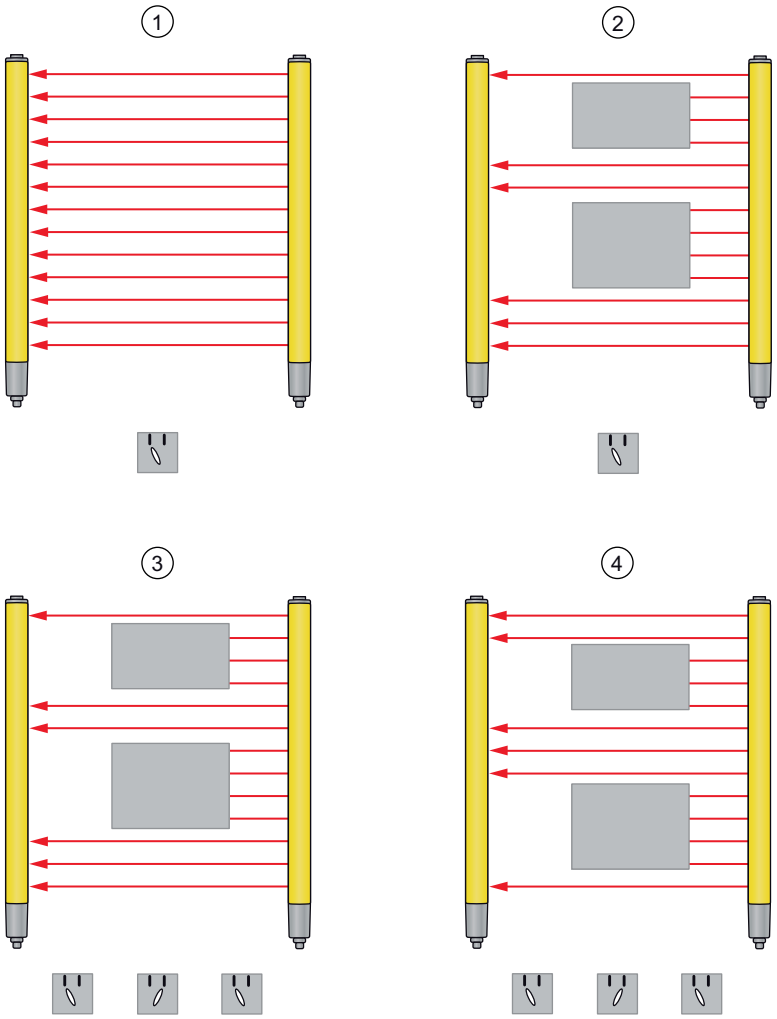

1	Initial situation
2	Bring objects into the protective field
3	Start teaching - activate and release key switch
4	End teaching - activate and release key switch

Fig. 9.1: Teaching of fixed blanking areas

10 Testing

NOTICE

- Safety sensors must be replaced at the end of their mission time (see chapter 15 "Technical data").
- Always exchange entire safety sensors.
- Observe any nationally applicable regulations regarding the tests.
- Document all tests in a comprehensible manner and include the configuration of the safety sensor along with the data for the safety- and minimum distances in the documentation.

10.1 Before commissioning and following modifications

WARNING

Unpredictable machine behavior during start-up may result in serious injury!

- Make certain that there are no people in the danger zone.

- Before they begin work, train the operators on their respective tasks. The training is the responsibility of the operating company.
- Attach notes regarding daily testing in the respective national language of the operator on the machine in a highly visible location, e.g. by printing out the corresponding chapter (see chapter 10.3 "Periodically by the operator").
- Test the electrical function and installation according to this document.

Acc. to IEC 62046 and national regulations (e.g. EU directive 2009/104/EC), tests are to be performed by competent persons (see chapter 2.2 "Necessary competencies") in the following situations:

- Prior to commissioning
- Following modifications to the machine
- After longer machine downtime
- Following retrofitting or new configuration of the machine

- As preparation, check the most important criteria for the safety sensor according to the following check-list (see chapter 10.1.1 "Checklist for integrator – to be performed prior to commissioning and following modifications"). Completing the checklist does not replace testing by competent persons (see chapter 2.2 "Necessary competencies")!
- ⇨ Not until proper function of the safety sensor is ascertained may it be integrated in the control circuit of the system.

10.1.1 Checklist for integrator – to be performed prior to commissioning and following modifications

NOTICE

Completing the checklist does not replace testing by a qualified person (see chapter 2.2 "Necessary competencies")!

- If you answer one of the items on the following check list with **no**, the machine must no longer be operated.
- IEC 62046 contains additional recommendations on testing protective devices.

Tab. 10.1: Checklist for integrator – to be performed prior to the initial start-up and following modifications

Check:	Yes	No	not applicable
Is the safety sensor operated acc. to the specific environmental conditions that are to be maintained (see chapter 15 "Technical data")?			
Is the safety sensor correctly aligned and are all fastening screws and connectors secure?			
Are safety sensor, connection cables, connectors, protection caps and command devices undamaged and without any sign of manipulation?			
Does the safety sensor satisfy the required safety level (PL, SIL, category)?			
Are both safety-related switching outputs (OSSDs) integrated in the downstream machine control acc. to the required safety category?			
Are switching elements that are controlled by the safety sensor monitored according to the required safety level (PL, SIL, category) (e.g., contactors through EDM)?			
Are all points of operation near the safety sensor accessible only through the protective field of the safety sensor?			
Are the necessary additional protective devices in the immediate surroundings (e.g., safety guard) properly mounted and secured against tampering?			
If it is possible to be present undetected between the safety sensor and point of operation: is an assigned start/restart interlock functional?			
Is the command device for unlocking the start/restart interlock mounted in such a way that it cannot be reached from within the danger zone and so that the complete danger zone can be seen from the installation location?			
Has the maximum stopping time of the machine been measured and documented?			
Is the required safety distance maintained?			
Does interruption with a test object intended for this purpose cause the dangerous movement(s) to stop?			
For protective fields with different resolution: Have each of the areas with different resolution been tested with a suitable test object?			
Is the safety sensor effective during the entire dangerous movement(s)?			
Is the safety sensor effective in all relevant operating modes of the machine?			
Is start-up of dangerous movements reliably prevented if an active light beam or the protective field is interrupted with a test object intended for this purpose?			
Was the sensor detection capacity successfully tested (see chapter 10.3.1 "Checklist – periodically by the operator")?			
Were distances to reflective surfaces taken into account during configuration and no reflection bypasses subsequently detected?			
Are notices for regular testing of the safety sensor legible to the operator and are they located in a highly visible location?			
Are changes to the safety function (e.g. blanking, protective field switchover) not easy to achieve through tampering?			

Check:	Yes	No	not applicable
Are settings that could result in an unsafe state possible only by means of key, password or tool?			
Are there incentives that pose stimulus for tampering?			
Were the operators instructed prior to starting work?			
Passage through or riding on or next to the transport material or transport system is not possible during SPG operation.			
Does switching signal CS > 200 mm no longer apply before the protective field?			
Does switching signal CS > 200 mm no longer apply after the protective field has been cleared?			
Top and bottom beam are not permanently interrupted?			
The CS switching signal and, if applicable, the TH timer hold signal are generated by the control from the automatic process? The signals are under no circumstances derived directly from sensors, i.e., without further processing or in combination with other signals or states?			
Is the CS switching signal difficult to manipulate?			
Does the pendulum flap prevent access (see chapter 4.4.3 "operating mode 6")?			

10.2 To be performed periodically by competent persons

The reliable interaction of safety sensor and machine must be regularly tested by qualified persons (see chapter 2.2 "Necessary competencies") in order to detect changes to the machine or impermissible tampering with the safety sensor.

Acc. to IEC 62046 and national regulations (e.g., EU directive 2009/104/EC), tests of elements which are subject to wear must be performed by qualified persons (see chapter 2.2 "Necessary competencies") at regular intervals. Testing intervals may be regulated by nationally applicable regulations (recommendation acc. to IEC 62046: 6 months).

- Only allow testing to be performed by qualified persons (see chapter 2.2 "Necessary competencies").
- Observe the nationally applicable regulations and the time periods specified therein.
- As preparation, observe the checklist (see chapter 10.1 "Before commissioning and following modifications").

10.3 Periodically by the operator

The function of the safety sensor must be checked depending on the given risk according to the following checklist so that damages or prohibited tampering can be detected.

Depending on the risk assessment, the test cycle must be defined by the integrator or operating company (e.g., daily, on shift changes, ...) or is specified by national regulations or regulations of the employer's liability insurance association and may be dependent on the machine type.

Due to complex machines and processes, it may be necessary under certain circumstances to check some points at longer time intervals. Observe the classification in “Test at least” and “Test when possible”.

NOTICE

For larger distances between transmitter and receiver and when using deflecting mirrors, a second person may be necessary.

WARNING

Unpredictable machine behavior during the test may result in serious injury!

- Make certain that there are no people in the danger zone.
- Before they begin work, train the operators on their respective tasks and provide suitable test objects and an appropriate test instruction.

10.3.1 Checklist – periodically by the operator

NOTICE

↳ If you answer one of the items on the following check list with **no**, the machine must no longer be operated.

Periodic function test based on the hazard evaluation

Tab. 10.2: Checklist – testing by instructed operators/persons

Test at least:	Yes	No
Are safety sensor and connectors securely mounted and free of obvious signs of damage, changes or tampering?		
Were no obvious changes made to access or entry possibilities?		
Test the effectiveness of the safety sensor: • The LED 1 on the safety sensor must illuminate green (see chapter 3.3.2 "Operating indicators on the MLC 530 SPG receiver"). • Interrupt an active beam or the protective field (see figure) with a suitable, opaque test object: 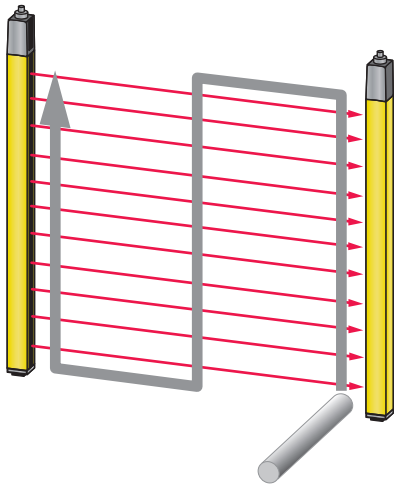 Checking the protective field function with test rod (only for safety light curtains with a resolution of 14 … 40 mm). For light curtains with different resolution ranges, this check is to be performed separately for each resolution range. • Does the OSSD LED on the receiver illuminate constantly red while the protective field is interrupted?		

When possible, test during running operation:	Yes	No
Protective device with approach function: during machine operation, the protective field is interrupted with the test object – are the obviously dangerous machine parts stopped without noticeable delay?		
Protective device with presence detection: the protective field is interrupted with the test object – does this prevent operation of the obviously dangerous machine parts?		

11 Maintenance

	NOTICE
!	**Faulty operation if transmitter and receiver are soiled!** The surfaces of the front screen of transmitters, receivers and, where applicable, deflecting mirror must not be scratched or roughened at the positions where beams enter and exit. ↳ Do not use chemical cleaners.

Prerequisites for cleaning:

- The system is safely shut down and protected against restart.

↳ Clean the safety sensor periodically depending on the degree of contamination.

	NOTICE
!	**Prevent electrostatic charging of the front screens!** ↳ To clean the front screens of transmitter and receiver, use only damp cloths.

12 Troubleshooting

12.1 What to do in case of failure?

After switching the safety sensor on, the display elements (see chapter 3.3 "Display elements") assist in checking the correct functionality and in faultfinding.

In case of failure, you can determine the fault from the LED displays or read a message from the 7-segment display. With the error message you can determine the cause of the error and initiate measures to rectify it.

	NOTICE
	If the safety sensor responds with an error display, you will often be able to eliminate the cause yourself! ↳ Switch off the machine and leave it switched off. ↳ Analyze and eliminate the cause of the fault using the following table. ↳ If you are unable to rectify the fault, contact the Leuze electronic branch responsible for you or call the Leuze electronic customer service (see chapter 14 "Service and support").

12.2 Operating indicators of the LEDs

Tab. 12.1: LED indicators at the transmitter - causes and measures

LED	State	Cause	Measure
LED1	OFF	Transmitter without supply voltage	Check the power supply unit and the electrical connection. Exchange the power supply unit, if applicable.
	Red	Device failed	Replace the device.

Tab. 12.2: LED indicators at the receiver - causes and measures

LED	State	Cause	Measure
LED1	OFF	Device failed	Replace the device.
	Red (7-segment display during start-up: “C1” or “C2” according to the number of green LEDS on the transmitter)	Alignment incorrect or protective field interrupted	Remove all objects from the protective field. Align the transmitter and receiver to each other or place blanked objects correctly concerning size and position.
	Red (7-segment display during start-up: “C1”. LEDs on transmitter: both green)	Receiver is set on C1, transmitter on C2	Set the transmitter and receiver on the same transmission channel and align both correctly.
	Red (7-segment display during start-up: “C2”. LED1 on transmitter: green)	Receiver is set on C2, transmitter on C1	Set the transmitter and receiver on the same transmission channel and align both correctly.
	Red, flashing slowly, approx. 1 Hz (7-segment display “E x y”)	External error	Check the connection of the cables and the control signals.
	Red, flashing fast, approx. 10 Hz (7-segment display “F x y”)	Internal error	If restart fails, exchange the device.
LED2	Yellow OSSD off	Start/restart interlock is locked and protective field is free - ready for unlocking	If there are no people in the danger zone, operate the reset button.
LED3	Blue, quickly flashing	Teach-in error or SPG condition violated	Re-teach the blanking areas or check the SPG prerequisites.
	Blue, very quickly flashing	Teaching of blankings still active	Press the teach button again.

12.3 Error messages 7-segment display

Tab. 12.3: Messages of the 7-segment display (F: internal device error, E: external error, U: usage info during application errors)

Error	Cause/description	Measures	Sensor behavior
F[No. 0-255]	Internal error	In the event of an unsuccessful restart, contact customer service.	
OFF	Very high overvoltage (± 40 V)	Supply the device with the correct voltage.	
Flashing	Weak signal display	Check the alignment or clean the front screens.	
E01	Cross connection between OSSD1 and OSSD2	Check the wiring between OSSD1 and OSSD2.	OSSD switches off
E02	Overload on OSSD1	Check the wiring or exchange the connected component (reducing the load).	OSSD switches off

Error	Cause/description	Measures	Sensor behavior
E03	Overload on OSSD2	Check the wiring or exchange the connected component (reducing the load).	OSSD switches off
E04	High-impedance short circuit to VCC OSSD1	Check the wiring. Exchange the cable, if applicable.	OSSD switches off
E05	High-impedance short circuit to VCC OSSD2	Check the wiring. Exchange the cable, if applicable.	OSSD switches off
E06	Short circuit against GND at OSSD1	Check the wiring. Exchange the cable, if applicable.	OSSD switches off
E07	Short circuit against +24 V at OSSD1	Check the wiring. Exchange the cable, if applicable.	OSSD switches off
E08	Short circuit against GND at OSSD2	Check the wiring. Exchange the cable, if applicable.	OSSD switches off
E09	Short circuit against +24 V at OSSD2	Check the wiring. Exchange the cable, if applicable.	OSSD switches off
E10, E11	OSSD error, source unknown	Check the wiring. Exchange the cable and the receiver if necessary.	OSSD switches off
E14	Undervoltage (< +15 V)	Supply the device with the correct voltage.	OSSD switches off
E15	Overvoltage (> +32 V)	Supply the device with the correct voltage.	OSSD switches off
E16	Overvoltage (> +40 V)	Supply the device with the correct voltage.	Locking
E18	Ambient temperature too high	Ensure correct environmental conditions	OSSD switches off
E19	Ambient temperature too low	Ensure correct environmental conditions	OSSD switches off
E22	Interference detected on plug pin 3. Signal output: output signal is not equal to the signal input read-back value: it switches simultaneously with the other signal line.	Check the wiring.	OSSD switches off
E23	Interference detected on plug pin 4. Signal output: output signal is not equal to the signal input read-back value: it switches simultaneously with the other signal line.	Check the wiring.	OSSD switches off
E24	Interference detected on plug pin 8. Signal output: output signal is not equal to the signal input read-back value: it switches simultaneously with the other signal line.	Check the wiring.	OSSD switches off
E39	Actuation duration (2.5 min) exceeded for reset button or cable short circuited	Press the reset button. If the restart is unsuccessful, check the wiring of the reset button.	OSSD switches off

Error	Cause/description	Measures	Sensor behavior
E41	Invalid change of operating mode due to reversal of the supply voltage polarity during operation	Check the wiring and programming of the device which controls this signal.	Locking
E60	Fault in the beam configuration	Repeat the teach event.	OSSD switches off
E61	Response time exceeded	Reboot. If the problem occurs again, swap out the device.	OSSD switches off
E62	Blanking areas overlap (teach error)	Repeat the teach event.	OSSD switches off
E64	After initiating the gating sequence, the protective field was interrupted too late (after 4 s)	Press the RES button	OSSD switches off.
E65	Timeout 1 h, elapsed during P-mode (no protective field violation after applying the CS signal), CS is still high after expiration of this time	Press the RES button	OSSD switches off.
E66	CS signal dropped out before protective field was cleared again during override	Check CS signal sequence	OSSD switches off.
E67	TH signal dropped out before protective field was cleared again during override (operating mode 1 or 6)	Check TH signal sequence	OSSD switches off.
E68	Override timeout of 120 s exceeded. Interlock state assumed after 150 s. (> 150 s)	Check wiring or acknowledgment unit	The OSSD switches off after 120 s, interlock after 150 s; the receiver must be de-energized after about 3 min
E69	Simultaneity violation of TH and CS (> 0.5 s) (operating mode 1 or 6)	Check CS/TH signal sequence	OSSD switches off.
E70	If the protective field is interrupted, CS is no longer active or sync beams were interrupted for longer than 1 min.	Check CS signal sequence or rectify interruption of the sync beams	OSSD switches off.
E71	Protective field violation before gating sequence reset	Press the RES button	OSSD switches off.
E72	Signal error: CS/TH antivalence violated at the end of the sequence (operating mode 1 or 6)	Check CS/TH signal sequence	OSSD switches off.
E73	Signal error: CS/TH antivalence violated on qualified stop (operating mode 1 or 6)	Check CS/TH signal sequence	OSSD switches off.
E74	Restart interlock locked (OSSD off) before SPG start (CS is high)	Unlocking restart interlock	OSSD switches off.

Error	Cause/description	Measures	Sensor behavior
E75	CS applied for longer than 20 s after the end of the SPG sequence	Check CS signal sequence	OSSD switches off.
E76	CS was ended before 4 s elapsed (operating mode 5)	Check CS signal sequence	OSSD switches off.
E77	No protective field violation after activation of the CS signal and elapsing of the timeout (1 h) after changing to protective mode and deactivation of the CS signal	Check CS signal sequence	OSSD switches off.
E78	Signal error: CS/TH antivalence violated during initiation/ restart with possible gating timeout extension (operating mode 1 or 6)	Check CS signal sequence	OSSD switches off.
E79	SPG timeout exceeded	Timeout or use TH signal	OSSD switches off.
E80 … E86	Invalid operating mode due to setting error, general operating mode change	E.g. reset button pressed during start-up, check the circuit diagram and the wiring and restart.	Locking
E87	Operating mode changed	Check the wiring. Restart the sensor.	Locking
E90	Error in cascade	Please contact customer service if you are unable to restart the device	Locking
E92, E93	Error in the saved transmission channel	Perform channel switching again.	Automatic reset
U53	The protective field was not interrupted within 4 s after activation of the control signal CS (MLC in P-mode)	Press the RES button and start a new sequence	Protective mode
U54	Timeout of 1 h elapsed during P-mode (no protective field violation after applying the CS signal) and CS has switched back to low before this 1 h elapsed	Check the further processing of the OSSD signals and the design of the system.	OSSD switches off.
U61	Teach-in not finished or not finished correctly	Repeat the teach event. Fixed blanking: interrupt beams uniquely or release them.	OSSD remains off.
U62	Simultaneity error of the signals from the teach button (key switch). Time difference > 4 s	Exchange the teach button (key switch).	OSSD remains off.
U63	2.5 min teach timeout exceeded	Maintain the correct time sequence during teaching.	OSSD remains off.
U69	Response time after teach-in of floating blanking too long (> 99 ms)	Use a device with fewer beams.	OSSD remains off.
U71	Teach data not plausible	Repeat the teach event.	OSSD remains off.
U74	The reset input has switched at the same time as a signal line (cross connection to RES input).	Eliminate the cross connection between the signal lines and press the reset button again.	OSSD remains off. Restart interlock not reset.

Error	Cause/description	Measures	Sensor behavior
U75	Teach data inconsistent	Repeat the teach event.	OSSD remains off.
U76	Teaching error	Repeat the teach event. Check whether LED 1 on the transmitter illuminates green.	OSSD remains off.
U80	CS signal already active on device startup	No acknowledgment, display only	OSSD remains off.
U82	Unexpected signals upon pressing the acknowledgment button (min. 1 free synchronization beam): • Operating mode 1 or 6: CS is not active or TH is active • Operating mode 5: CS is not active	No acknowledgment, display only Before successful acknowledgment, set CS or TH according to operating mode.	OSSD remains off.
U83	Unexpected signals upon pressing the acknowledgment button (no free synchronization beam): • Operating mode 1 or 6: CS is not active or TH is active • Operating mode 5: CS is not active	No acknowledgment, display only Before successful acknowledgment, set CS or TH according to operating mode.	OSSD remains off.
U84	Protective field free for too long	Check CS signal sequence, reduce gap in transport material	OSSD switches off.
U85	CS signal drop without protective field violation	Check CS signal sequence	OSSD remains on.
U86	One of the top four beams was interrupted in operating mode 6	Remove object from protective field and restart the receiver	OSSD switches off.

13 Disposing

↳ For disposal observe the applicable national regulations regarding electronic components.

14 Service and support

24-hour on-call service at:
+49 7021 573-0

Service hotline:
+49 7021 573-123

E-mail:
service.protect@leuze.de

Return address for repairs:
Servicecenter
Leuze electronic GmbH + Co. KG
In der Braike 1
D-73277 Owen/Germany

15 Technical data

15.1 General specifications

Tab. 15.1: Protective field data

Physical resolution [mm]	Operating range [m]		Protective field height [mm]	
	min.	max.	min.	max.
14	0	6	150	3000
20	0	15	150	3000
30	0	10	150	3000
40	0	20	150	3000
90	0	20	450	3000

Tab. 15.2: Safety-relevant technical data

Type in accordance with IEC 61496	Type 4
SIL in accordance with IEC 61508	SIL 3
SILCL in accordance with IEC 62061	SILCL 3
Performance Level (PL) in accordance with ISO 13849-1	PL e
Category in accordance with ISO 13849-1	Cat. 4
Average probability of a failure to danger per hour (PFH_d)	7.73×10^{-9} 1/h
Mission time (T_M)	20 years

Tab. 15.3: General system data

Connection technology	M12, 5-pin (transmitter) M12, 8-pin (receiver)
Supply voltage U_v, transmitter and receiver	+24 V, ± 20 %, compensation necessary at 20 ms voltage dip, min. 250 mA (+ OSSD load)
Residual ripple of the supply voltage	± 5 % within the limits of U_v
Current consumption - transmitter	50 mA
Current consumption receiver	150 mA (without load)
Common value for ext. fuse in the supply line for transmitter and receiver	2 A semi time-lag
Synchronization	Optical between transmitter and receiver
Protection class	III
Degree of protection	IP 65
Ambient temperature, operation	-30 … +55 °C
Ambient temperature, storage	-30 … 70 °C
Ambient temperature, MLC xxx/V operation	0 … 55 °C
Relative humidity (non-condensing)	0 … 95 %
Vibration resistance	50 m/s^2 acceleration, 10 - 55 Hz in acc. with IEC 60068-2-6; 0.35 mm amplitude
Shock resistance	100 m/s^2 acceleration, 16 ms acc. to IEC 60068-2-6

Profile cross section	29 mm x 35.4 mm
Dimensions	see chapter 15.2 "Dimensions and weights"
Weight	see chapter 15.2 "Dimensions and weights"

Tab. 15.4: System data - transmitter

Light source	LED; exempt group in acc. with IEC 62471
Wavelength	940 nm
Pulse duration	800 ns
Pulse pause	1.9 µs (min.)
Mean power	<50 µW
Input current pin 4 (range)	Against +24 V: 10 mA Against 0 V: 10 mA

Tab. 15.5: System data receiver, indication signals and control signals

Pin	Signal	Type	Electrical data
1	RES/STATE	Input: Output: Reaction time:	Against +24 V: 10 mA Against 0 V: 80 mA 100 ms
3, 4, 8	Depending on the operating mode	Input:	Against 0 V: 4 mA Against +24 V: 4 mA

Tab. 15.6: Technical data of the electronic safety-related switching outputs (OSSDs) on the receiver

Safety-related PNP transistor outputs (short-circuit monitored, cross-circuit monitored)	Minimum	Typical	Maximum
Switching voltage high active (U_v - 1.5V)	18 V	22.5 V	27 V
Switching voltage low		0 V	+2.5 V
Switching current		300 mA	380 mA
Residual current		<2 µA	200 µA In the event of a failure (if the 0 V cable is interrupted), each of the outputs behaves as a 120 kΩ resistor to U_v. A downstream safety PLC must not detect this as a logical “1”.
Load capacity			0.3 µF
Load inductivity			2 H

Safety-related PNP transistor outputs (short-circuit monitored, cross-circuit monitored)	Minimum	Typical	Maximum
Permissible wire resistance for load			<200 Ω Note the additional restrictions due to cable length and load current.
Permissible wire cross section		0.25 mm^2	
Permissible cable length between receiver and load			100 m
Test pulse width		60 µs	340 µs
Test pulse distance	(5 ms)	60 ms	
Response time		100 ms	

NOTICE

The safety-related transistor outputs perform the spark extinction. With transistor outputs, it is therefore neither necessary nor permitted to use the spark extinction circuits recommended by contactor or valve manufacturers (RC elements, varistors or recovery diodes), since these considerably extend the decay times of inductive switching elements.

Tab. 15.7: Patents

US patents	US 6,418,546 B

15.2 Dimensions and weights

Dimensions and weights are dependent on

- the resolution
- the length

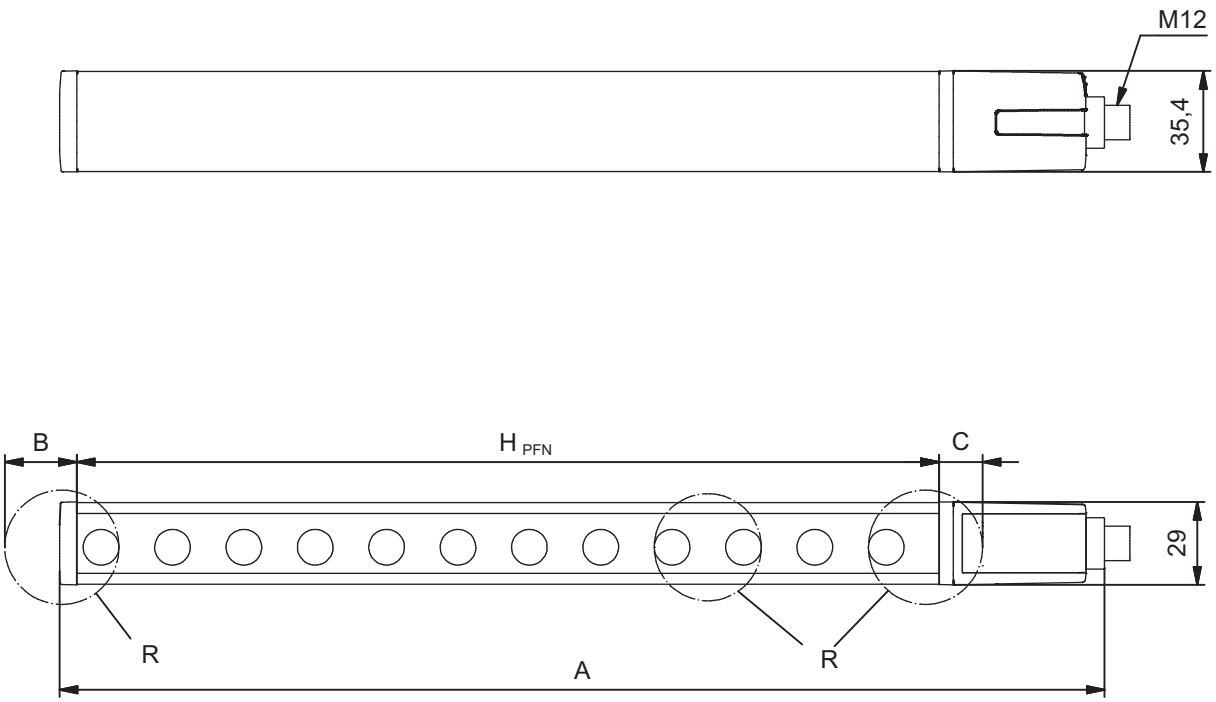

Fig. 15.1: Dimensions of transmitter and receiver

Effective protective field height H_{PFE} goes beyond the dimensions of the optics area to the outer borders of the circles labeled with R.

Calculation of the effective protective field height

$$H_{PFE} = H_{PFN} + B + C$$

H_{PFE}	mm	Effective protective field height
H_{PFN}	mm	Rated protective field height, this corresponds to the length of the yellow housing part (see tables below)
A	mm	Total height
B	mm	Additional dimensions for calculation of the effective protective field height (see table below)
C	mm	Value for calculating the effective protective field height (see tables below)

Tab. 15.8: Additional dimensions for calculating the effective protective field height

R = resolution	B	C
30 mm	19 mm	9 mm
40 mm	25 mm	15 mm
90 mm	50 mm	40 mm

Tab. 15.9: Dimensions (nominal protective field heights) and weights

Device type	Transmitter and receiver		
	Dimensions [mm]		Weight [kg]
Type	H_{PFN}	A	
MLC…-150	150	216	0.30
MLC…-225	225	291	0.37
MLC…-300	300	366	0.45
MLC…-450	450	516	0.60
MLC…-600	600	666	0.75
MLC…-750	750	816	0.90
MLC…-900	900	966	1.05
MLC…-1050	1050	1116	1.20
MLC…-1200	1200	1266	1.35
MLC…-1350	1350	1416	1.50
MLC…-1500	1500	1566	1.65
MLC…-1650	1650	1716	1.80
MLC…-1800	1800	1866	1.95
MLC…-1950	1950	2016	2.10
MLC…-2100	2100	2166	2.25
MLC…-2250	2250	2316	2.40
MLC…-2400	2400	2466	2.55
MLC…-2550	2550	2616	2.70
MLC…-2700	2700	2766	2.85
MLC…-2850	2850	2916	3.00
MLC…-3000	3000	3066	3.15

Devices with different resolution ranges

In addition to device model, models with different resolution ranges are also available.

Integrated in the protective field here is a 300-mm-long area with 14 mm resolution.

Tab. 15.10: Dimensions and weight (models with different resolution ranges)

Device type	Transmitter and receiver		
	Dimensions [mm]		Weight [kg]
Type	H_{PFN}	A	
MLC…-14300/301800	2100	2166	2.25
MLC…-14300/901800	2100	2166	2.25
MLC…-14300/902250	2550	2316	2.4

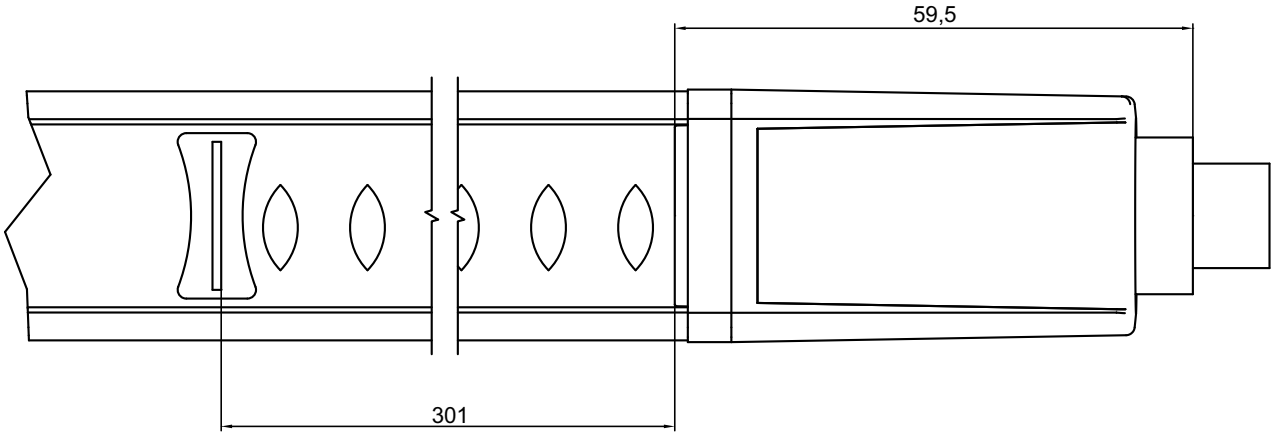

Fig. 15.2: Position of resolution limits; the change in resolution takes place at the marked position.

15.3 Dimensioned drawings: Accessories

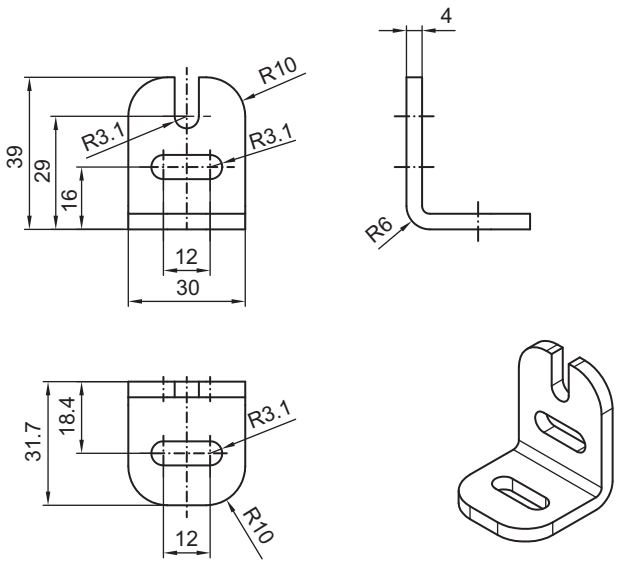

Fig. 15.3: BT-L mounting bracket

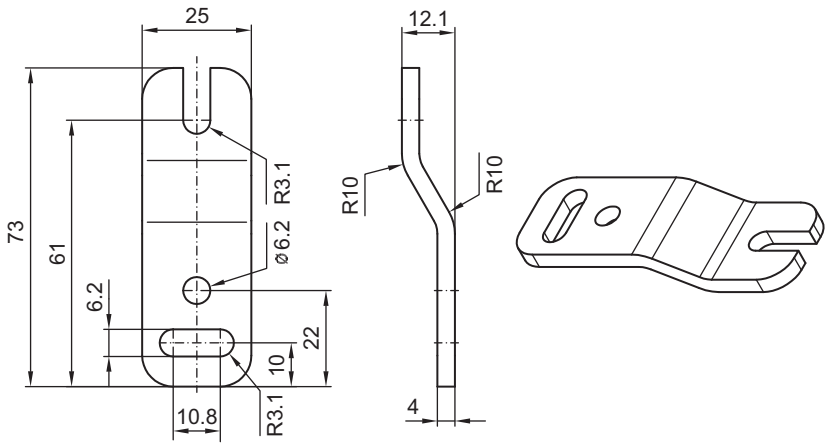

Fig. 15.4: BT-Z parallel bracket

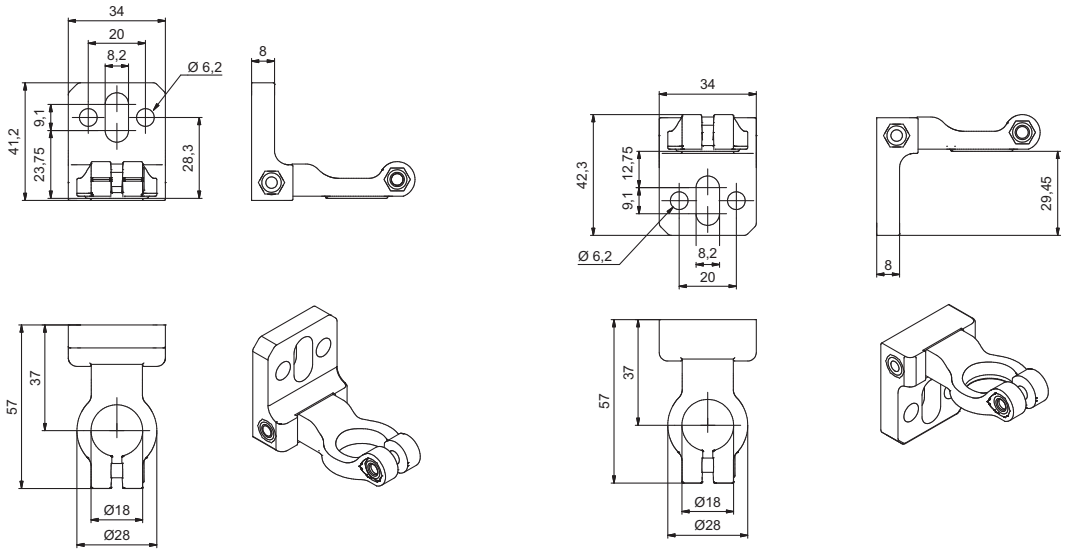

Fig. 15.5: Swivel mount BT-2HF

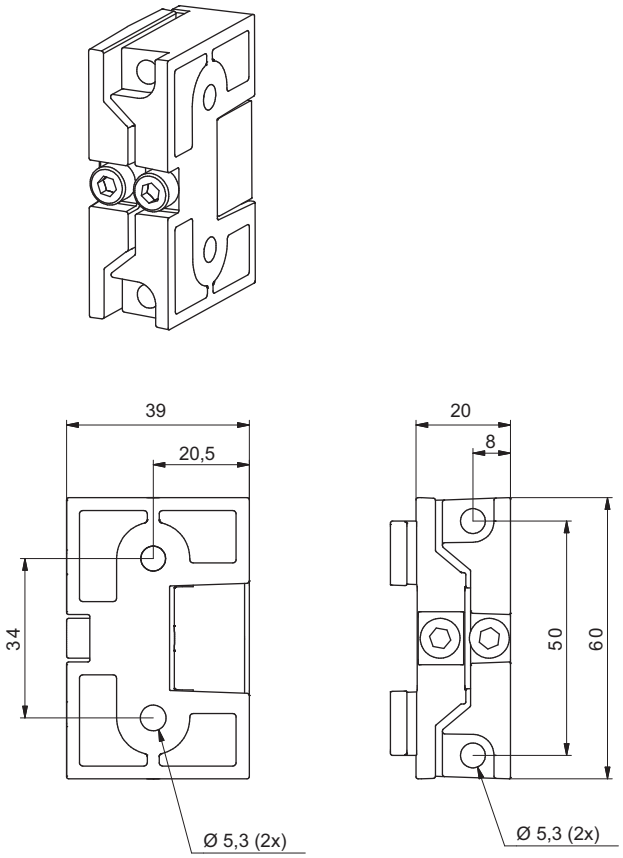

Fig. 15.6: Swiveling mounting bracket BT-2SB10

16 Order guide and accessories

Nomenclature

Part designation:

MLCxyy-za-hhhhei-ooo

Part designation for devices with different resolution ranges

MLC5yyzahhh/ahhhh-ooo

Tab. 16.1: Part number code

MLC	Safety sensor
x	Series: 3 for MLC 300
x	Series: 5 for MLC 500
yy	Function classes: 00: Transmitter 01: transmitter (AIDA) 02: Transmitter with test input 10: Basic receiver - automatic restart 11: basic receiver - automatic restart (AIDA) 20: Standard receiver - EDM/RES selectable 30: Extended receiver - blanking/muting
z	Device type: T: transmitter R: receiver
a	Resolution: 14: 14 mm 20: 20 mm 30: 30 mm 40: 40 mm 90: 90 mm
hhhh	Protective field height: 150 … 3000: from 150 mm to 3000 mm
e	Host/Guest (optional): H: Host MG: Middle Guest G: Guest
i	Interface (optional): /A: AS-i
ooo	Option: EX2: explosion protection (zones 2 + 22) /V: high Vibration-proof SPG: Smart Process Gating

Tab. 16.2: Part descriptions, examples

Examples for part designation	Properties
MLC500T14-600	Type 4 transmitter, PL e, SIL 3, resolution 14 mm, protective field height 600 mm
MLC500T30-900	Type 4 transmitter, PL e, SIL 3, resolution 30 mm, protective field height 900 mm
MLC530R90-1500-SPG	Type 4 Extended receiver, Smart Process Gating, PL e, SIL 3, resolution 90 mm, protective field height 1500 mm
MLC530R14300/901800-SPG	Extended receiver, Smart Process Gating. Type 4, PL e, SIL 3, resolution 14 mm, protective field height 300 mm and resolution 90 mm, protective field height 1800 mm

Scope of delivery

- Transmitter including 2 sliding blocks, 1 instruction sheet
- Receiver including 2 sliding blocks, 1 self-adhesive notice sign “Important notices and notices for the machine operator”, 1 set of connecting and operating instructions (PDF file on CD-ROM)

Tab. 16.3: Part numbers of MLC 500 transmitter depending on resolution and protective field height

Protective field height hhhh [mm]	30 mm MLC500T30-hhhh	40 mm MLC500T40-hhhh	90 mm MLC500T90-hhhh
150	68000301	68000401	-
225	68000302	68000402	-
300	68000303	68000403	-
450	68000304	68000404	68000904
600	68000306	68000406	68000906
750	68000307	68000407	68000907
900	68000309	68000409	68000909
1050	68000310	68000410	68000910
1200	68000312	68000412	68000912
1350	68000313	68000413	68000913
1500	68000315	68000415	68000915
1650	68000316	68000416	68000916
1800	68000318	68000418	68000918
1950	68000319	68000419	68000919
2100	68000321	68000421	68000921
2250	68000322	68000422	68000922
2400	68000324	68000424	68000924
2550	68000325	68000425	68000925
2700	68000327	68000427	68000927
2850	68000328	68000428	68000928
3000	68000330	68000430	68000930

Tab. 16.4: Example part numbers for transmitters with different resolution ranges

Part no.	Designation	Resolution 1	Resolution 2	Protective field length 2
68096002	ML-C500T14300/30180 0	14	30	1800
68096005	ML-C500T14300/90180 0	14	90	1800
68096003	ML-C500T14300/90225 0	14	90	2250

Tab. 16.5: Part numbers of MLC 530 SPG receiver depending on resolution and protective field height

Protective field height hhhh [mm]	30 mm MLC530R30-hhhh-SPG	40 mm MLC530R40-hhhh-SPG	90 mm MLC530R90-hhhh-SPG
150	68009301	68009401	-
225	68009302	68009402	-
300	68009303	68009403	-
450	68009304	68009404	68009904
600	68009306	68009406	68009906
750	68009307	68009407	68009907
900	68009309	68009409	68009909
1050	68009310	68009410	68009910
1200	68009312	68009412	68009912
1350	68009313	68009413	68009913
1500	68009315	68009415	68009915
1650	68009316	68009416	68009916
1800	68009318	68009418	68009918
1950	68009319	68009419	68009919
2100	68009321	68009421	68009921
2250	68009322	68009422	68009922
2400	68009324	68009424	68009924
2550	68009325	68009425	68009925
2700	68009327	68009427	68009927
2850	68009328	68009428	68009928
3000	68009330	68009430	68009930

Tab. 16.6: Example part numbers for receivers with different resolution ranges

Part no.	Designation	Resolution 1	Resolution 2	Protective field length 2
68096000	ML-C530R14300/301800-SPG	14	30	1800
68096004	ML-C530R14300/901800-SPG	14	90	1800
68096001	ML-C530R14300/902250S-SPG	14	90	2250

Tab. 16.7: Accessories

Part no.	Article	Description
Connection cables for MLC 500 **transmitter, shielded**		
50133860	KD S-M12-5A-P1-050	Connection cable, 5-pin, 5 m long
50133861	KD S-M12-5A-P1-100	Connection cable, 5-pin, 10 m long
678057	CB-M12-15000E-5GF	Connection cable, 5-pin, 15 m long
678058	CB-M12-25000E-5GF	Connection cable, 5-pin, 25 m long
50137013	KD S-M12-5A-P1-500	Connection cable, 5-pin, 50 m long
Connection cables for MLC 530 SPG **receiver, shielded**		
50135128	KD S-M12-8A-P1-050	Connection cable, 8-pin, 5 m long
50135129	KD S-M12-8A-P1-100	Connection cable, 8-pin, 10 m long
50135130	KD S-M12-8A-P1-150	Connection cable, 8-pin, 15 m long
50135131	KD S-M12-8A-P1-250	Connection cable, 8-pin, 25 m long
50135132	KD S-M12-8A-P1-500	Connection cable, 8-pin, 50 m long
User-configurable connectors for MLC 500 transmitter		
429175	CB-M12-5GF	Cable socket, 5-pin, metal housing, shield on housing
User-configurable connectors for MLC 530 SPG receiver		
429178	CB-M12-8GF	Cable socket, 8-pin, metal housing, shield on housing
Sensor connection modules		
520160	AC-SCM8U	Sensor connection module for control and display units and operational controls with 4 M12x5 sockets and one M12x8 plug
520162	AC-SCM8U-BT-L	Sensor connection module for control and display units and operational controls incl. retaining plate and mounting devices
Display and confirmation units		
426363	AC-ABF-SL1	Display and confirmation unit

Part no.	Article	Description
426290	AC-ABF10	Display and confirmation unit
426296	AC-ABF70	Display and confirmation unit, 2x connection cable M12
Mounting technology		
429056	BT-2L	L mounting bracket, 2x
429057	BT-2Z	Z mounting bracket, 2x
429393	BT-2HF	360° swivel mount, 2x incl. 1 MLC cylinder
429394	BT-2HF-S	360° swivel mount, vibration-damped, 2x incl. 1 MLC cylinder
424422	BT-2SB10	Swiveling mounting bracket for groove mounting, ± 8°, 2x
424423	BT-2SB10-S	Swiveling mounting bracket for groove mounting, ± 8°, vibration damped, 2x
425740	BT-10NC60	Sliding block with M6 thread, 10 x
425741	BT-10NC64	Sliding block with M6 and M4 thread, 10 x
425742	BT-10NC65	Sliding block with M6 and M5 thread, 10 x
Device columns		
549855	UDC-900-S2	Device column, U-shaped, profile height 900 mm
549856	UDC-1000-S2	Device column, U-shaped, profile height 1000 mm
549852	UDC-1300-S2	Device column, U-shaped, profile height 1300 mm
549853	UDC-1600-S2	Device column, U-shaped, profile height 1600 mm
549854	UDC-1900-S2	Device column, U-shaped, profile height 1900 mm
549857	UDC-2500-S2	Device column, U-shaped, profile height 2500 mm
Deflecting mirror columns		
549780	UMC-1000-S2	Continuous deflecting mirror column 1000 mm
549781	UMC-1300-S2	Continuous deflecting mirror column 1300 mm
549782	UMC-1600-S2	Continuous deflecting mirror column 1600 mm
549783	UMC-1900-S2	Continuous deflecting mirror column 1900 mm
Deflecting mirror		
529601	UM60-150	Deflecting mirror, mirror length 210 mm
529603	UM60-300	Deflecting mirror, mirror length 360 mm
529604	UM60-450	Deflecting mirror, mirror length 510 mm
529606	UM60-600	Deflecting mirror, mirror length 660 mm
529607	UM60-750	Deflecting mirror, mirror length 810 mm
529609	UM60-900	Deflecting mirror, mirror length 960 mm
529610	UM60-1050	Deflecting mirror, mirror length 1110 mm
529612	UM60-1200	Deflecting mirror, mirror length 1260 mm
529613	UM60-1350	Deflecting mirror, mirror length 1410 mm
529615	UM60-1500	Deflecting mirror, mirror length 1560 mm
529616	UM60-1650	Deflecting mirror, mirror length 1710 mm

Part no.	Article	Description
529618	UM60-1800	Deflecting mirror, mirror length 1860 mm
430105	BT-2UM60	Mounting bracket for UM60, 2x
Protective screens		
347070	MLC-PS150	Protective screen, length 148 mm
347071	MLC-PS225	Protective screen, length 223 mm
347072	MLC-PS300	Protective screen, length 298 mm
347073	MLC-PS450	Protective screen, length 448 mm
347074	MLC-PS600	Protective screen, length 598 mm
347075	MLC-PS750	Protective screen, length 748 mm
347076	MLC-PS900	Protective screen, length 898 mm
347077	MLC-PS1050	Protective screen, length 1048 mm
347078	MLC-PS1200	Protective screen, length 1198 mm
347079	MLC-PS1350	Protective screen, length 1348 mm
347080	MLC-PS1500	Protective screen, length 1498 mm
347081	MLC-PS1650	Protective screen, length 1648 mm
347082	MLC-PS1800	Protective screen, length 1798 mm
429038	MLC-2PSF	Mounting device for MLC protective screen, 2 x
429039	MLC-3PSF	Mounting device for MLC protective screen, 3 x
Muting indicators		
548000	MS851	Muting indicator with incandescent lamp
660600	MS70/2	Muting double indicator with incandescent lamp
660611	MS70/LED-M12-2000-4GM	LED muting indicator with connection cable 2 m
Alignment aids		
560020	LA-78U	External laser alignment aid
520004	LA-78UDC	External laser alignment aid for fastening in Device Column
520101	AC-ALM-M	Alignment aid
Test rods		
349945	AC-TR14/30	Test rod 14/30 mm
349939	AC-TR20/40	Test rod 20/40 mm

17 EU/EC Declaration of Conformity

SMART
SENSOR
BUSINESS

Leuze electronic
the sensor people

EU-/EG-KONFORMITÄTS-ERKLÄRUNG	EU/EC DECLARATION OF CONFORMITY	DECLARATION UE/CE DE CONFORMITE
Hersteller:	Manufacturer:	Constructeur:
	Leuze electronic GmbH + Co. KG In der Braike 1, PO Box 1111 73277 Owen, Germany	
Produktbeschreibung:	Description of product:	Description de produit:
Sicherheits- Lichtvorhang, Berührungslos wirkende Schutzeinrichtung, Sicherheitsbauteil nach 2006/42/EG Anhang IV MLC 300, MLC 500 Seriennummer siehe Typschild	**Safety Light Curtain, Active opto-electronic protective device, safety component in acc. with 2006/42/EC annex IV MLC 300, MLC 500 Serial no. see name plates**	**Barrière immatérielle de sécurité, Equipement de protection électrosensible, Elément de sécurité selon 2006/42/CE annexe IV MLC 300, MLC 500 N° série voir plaques signalétiques**
Die alleinige Verantwortung für die Ausstellung dieser Konformitätserklärung trägt der Hersteller.	This declaration of conformity is issued under the sole responsibility of the manufacturer.	La présente déclaration de conformité est établie sous la seule responsabilité du fabricant.
Der oben beschriebene Gegenstand der Erklärung erfüllt die einschlägigen Harmonisierungsrechts-vorschriften der Union:	The object of the declaration described above is in conformity with the relevant Union harmonisation legislation:	L'objet de la déclaration décrit ci-dessus est conforme à la législation d'harmonisation de l'Union applicable:
Angewandte EU-/EG-Richtlinie(n):	Applied EU/EC Directive(s):	Directive(s) UE/CE appliquées:
2006/42/EG (*1) 2014/30/EU	**2006/42/EC (*1) 2014/30/EU**	**2006/42/CE (*1) 2014/30/UE**

Angewandte harmonisierte Normen / Applied harmonized standards / Normes harmonisées appliquées:

EN 61496-1:2013 (Type2/4) EN 62061:2005+A2:2015 (SILCL1/3)	**EN 55011:2009+A1:2010**	**EN ISO 13849-1:2015 (Cat 2/4,PLc/e)**

Angewandte technische Spezifikationen / Applied technical specifications / Spécifications techniques appliquées:

IEC 61496-2:2013 (Type2/4)	**EN 50178:1997**	**EN 61508-1/-2/-3/-4:2010 (SIL1/3)**

Notified Body
(*1) TUEV-SUED Product Service GmbH, Zertifizierstelle, Ridlerstraße 65, D-80339 Munich, NB0123, Z10 17 08 68636 029
Dokumentationsbevollmächtigter ist der genannte Hersteller, Kontakt: quality@leuze.de.
Authorized for documentation is the stated manufacturer, contact: quality@leuze.de.
Autorisé pour documentation est le constructeur déclaré, contact: quality@leuze.de
2014/30/EU veröffentlicht: 29.03.2014, EU-Amtsblatt Nr. L 96/79-106; 2014/30/EU published: 29.03.2014, EU-Journal No. L 96/79-106; 2014/30/UE publié: Journal EU n° L 96/79-106

23.01.2018
Datum / Date / Date

Ulrich Balbach,
Geschäftsführer / Managing Director / Gérant

i.A. Fabien Zelenda
Quality Management Central Functions

Leuze electronic GmbH + Co. KG
In der Braike 1
D-73277 Owen
Telefon +49 (0) 7021 573-0
Telefax +49 (0) 7021 573-199
info@leuze.de
www.leuze.com

Leuze electronic GmbH + Co. KG, Sitz Owen, Registergericht Stuttgart, HRA 230712
Persönlich haftende Gesellschafterin Leuze electronic Geschäftsführungs-GmbH, Sitz Owen, Registergericht Stuttgart, HRB 230550
Geschäftsführer: Ulrich Balbach
USt.-IdNr. DE 145912521 | Zollnummer 2554232
Es gelten ausschließlich unsere aktuellen Verkaufs- und Lieferbedingungen
Only our current Terms and Conditions of Sale and Delivery shall apply

LEO-ZQM-148-07-FO