LV463.XR Long Range amplifier with 1 switching output for fiber optics

Up to 5000 mm

Up to 1350 mm

10 - 30 V DC

Ø 2.2 mm

IO-Link

- Extra large operating ranges
- Two, large, easy-to-read displays for the simultaneous display of the signal value and the switching threshold
- Simple operation and easy-to-understand menu functions for optimum configuration
- Internal multiplex operation of up to six units
- Line teach or external transmitter activation
- Three different teach modes for fast sensor adjustment
- One switching output (PNP or NPN)
- Indicator diode for operation and switching output
- Connection via M8 connector, cable or cable with M12 connector

IEC 60947...

IEC 60947...

Accessories:

(available separately)

- Plastic fiber optics (KF, KFX)
- Glass fiber optics (GF)
- Ready-made cables (KD …)
- Mounting device (BTU LV463)

Dimensioned drawing

With cable

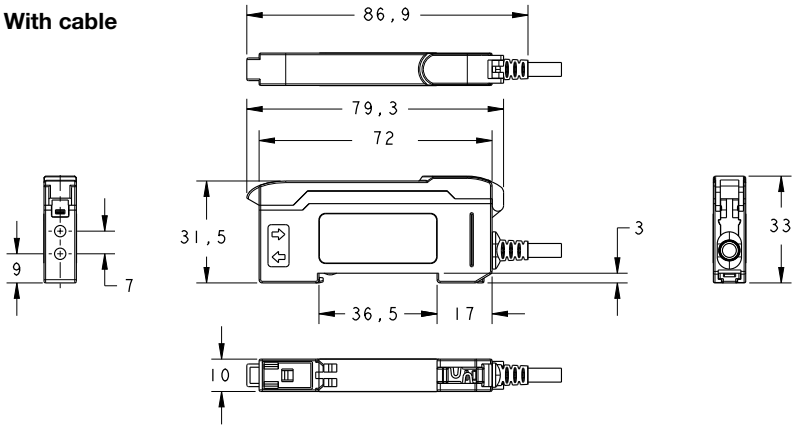

With M8 connector

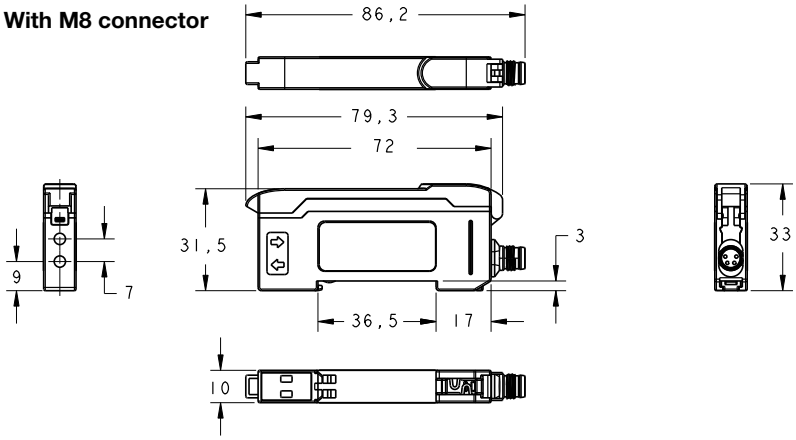

Mounting accessories

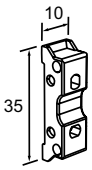

BTU LV463
Part no. 50120869

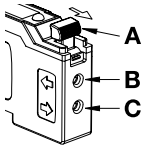

A Clamping lever for fiber optic cable (unlock in direction of arrow)
B Connection for fiber optics receiver
C Connection for fiber optics transmitter

Electrical connection

4-pin connector

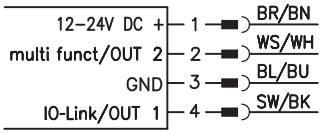

4-wire cable

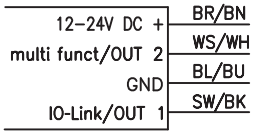

multi funct: - OFF
- Line teach
- Activation input
- Multiplex operation

Details → *Description of the subfunctions*

NOTE: Open lead wires must be connected to a terminal box.

en 02-2016/12 50135394

We reserve the right to make changes • DS_LV463XR1SWO_en_50135394.fm

ПРОМЭЛЕКТРОНИКА / sales@prom-elec.com

Technical data

Optical data		Throughbeam principle	Scanning principle
Operating range/scanning range [1]		Up to 5000mm	Up to 1350mm
Light source		LED (modulated light)	
Wavelength	LV463.XR…	660nm (visible red light)	
	LV463I.XR…	880nm (infrared light)	

Timing

Readiness delay	≤ 500ms
Internal cycle time	100µs

Signal range	Extra Long Range (XLR)	Long Range (LR)	Standard (STD)	Speed (S)	High Speed (HS)
Response time	24ms	8ms	2ms	1000µs	500µs
Switching frequency [2]	21Hz	62.5Hz	250Hz	500Hz	1000Hz
Display area (digits)	0 … 9999	0 … 9999	0 … 9999	0 … 9999	0 … 9999
Repeatability	180µs	180µs	180µs	150µs	100µs
Increased protection against optical crosstalk	Yes	Yes	Yes	Yes	No
Increased protection against ambient light through energy-saving lamps	Yes	Yes	Yes	No	No

Electrical data

Operating voltage U_B [3]		10 … 24VDC ± 10%
Residual ripple		≤ 10% of U_B
Open-circuit current		≤ 40mA @ 24VDC
Switching output	…/4…	Pin 4/bk: PNP
	…/2…	Pin 4/bk: NPN
	…/L4…	Pin 4/bk: IO-Link SIO mode, Push-pull (PNP light switching, NPN dark switching)
		Pin 4/bk: IO-Link COM2 mode
		Pin 2/wh: PNP dark switching
Function		Light/dark switching, adjustable by means of a switch
Switching output time functions		Switch-on/-off delay, passing contact (on actuation or fall-back), (combinations are limited → *Combinations of timing functions*)
Adjustable times (time functions)		0 … 9999ms
Signal voltage high/low		≥ (U_B-2.5V)/≤ 2.5V
Output current		≤ 100mA
Sensitivity		Adjustable using the teach function or **+/-** buttons

Indicators

Yellow LED	Switching output active
Display	2 x 7-segment LED, 4-digit, Red: signal strength, Green: switching threshold

Mechanical data

Housing	ABS/PC black/red, transparent PC cover
Weight	50g with M8 connector, 63g with 2000mm cable, 70g with 150mm cable and M12 connector
Connection type	M8 connector, 4-pin, or 2000mm cable, 4 x 0.25mm², or 150mm cable with M12 connector, 4-pin
Fiber optic connection	Clamp-mounting, 2 x Ø 2.2mm

Environmental data

Ambient temp. (operation/storage)	-10°C … +55°C/-20°C … +85°C
Protective circuit [4]	2, 3
Degree of protection	IP 50, NEMA 1
Standards applied	EN 60947-5-2
Certifications	UL 508, C22.2 No.14-13 [3] [5]

Additional functions

Sensor adjustment	Menu-driven using display and rocker push button

1) Range/scanning range depending on the fiber optics used
2) With a duty cycle of 1:1
3) For UL applications: use is permitted exclusively in Class 2 circuits according to NEC
4) 2=polarity reversal protection, 3=short circuit protection for all outputs
5) These proximity switches shall be used with UL Listed Cable assemblies rated 30V, 0.24A min, in the field installation, or equivalent (categories: CYJV/CYJV7 or PVVA/PVVA7)

Notes

NOTE

Detailed specifications on the range/scanning range are enclosed in the data sheets of our fiber optics type **KF**, **KFX** or **GF**.

Explanation of the signal ranges

Extra Long Range (XLR):
Extra long operating range, longest response time, display area 0 … 9999

Long Range (LR):
Long operating range with good response time; display area: 0 … 9999

Standard (STD):
Medium operating range and medium response time; display area: 0 … 9999

Speed (S):
Short operating range and short response time; display area: 0 … 9999

High Speed (HS):
Short operating range, very short response time; display area: 0 … 9999

Observe intended use!

- This product is not a safety sensor and is not intended as personnel protection.
- The product may only be put into operation by competent persons.
- Only use the product in accordance with its intended use.

NOTE

A separate data sheet with supplementary information on operation and configuration via IO-Link is available for the **amplifier with IO-Link**. You can find this in the Download area on the product page of the amplifier at ***www.leuze.com***.

LV463.XR Long Range amplifier with 1 switching output for fiber optics

Part number code

L V 4 6 3 _ . X R 7 / 4 T - 1 5 0 - M 1 2

Operating principle

LV	Fiber optic amplifiers

Series

463	463 series

Light source

Not specified	Red light
I	Infrared light

Design

Not specified	Standard design
XV	High-speed version
XR	Long-range version

Setting

7	Adjustment by means of control panel (7-segment red/green LED displays, slide switch, rocker push button)

Pin assignment of connector pin 4 / black cable wire (IO-Link / OUT1)

4	PNP transistor switching output, light switching
2	NPN transistor switching output, light switching
P	PNP transistor switching output, dark switching
N	NPN transistor switching output, dark switching
L	IO-Link
X	Not assigned (n. c.)

Pin assignment of connector pin 2 / white cable wire (multi funct / OUT2)

T	Multifunction input (teach, activation or multiplex operation)
4	PNP transistor switching output, light switching

Connection technology

Not specified	Connection cable, standard length 2000 mm, 4-wire
M8	M8 connector, 4-pin
150-M8	Cable, length 150 mm, with M8 connector, 4-pin
150-M12	Cable, length 150 mm, with M12 connector, 4-pin

Order guide

The sensors listed here are preferred types; current information at *www.leuze.com*

With one switching output and multifunction input

Features	Order code	Part no.
Red light, 1 PNP switching output	LV463.XR7/4T-M8	50133974
Red light, 1 PNP switching output	LV463.XR7/4T	50133973
Red light, 1 PNP switching output	LV463.XR7/4T-150-M12	50133975
Red light, 1 NPN switching output	LV463.XR7/2T-M8	50133976
Red light, 1 NPN switching output	LV463.XR7/2T	50133977
Red light, 1 NPN switching output	LV463.XR7/2T-150-M12	50133978
Infrared light, 1 PNP switching output	LV463I.XR7/4T	50133995
Infrared light, 1 PNP switching output	LV463I.XR7/4T-150-M12	50133996

With one switching output and IO-Link

Features	Order code	Part no.
Red light, 1 PNP switching output	LV463.XR7/L4-M8	50134007
Red light, 1 PNP switching output	LV463.XR7/L4	50134008
Red light, 1 PNP switching output	LV463.XR7/L4-150-M12	50134009

Mounting the amplifier

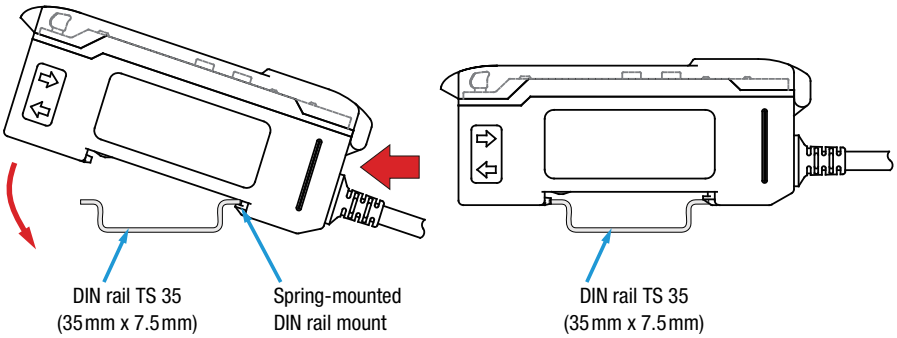

The amplifier is mounted as shown on a TS 35 DIN rail while disconnected from voltage.

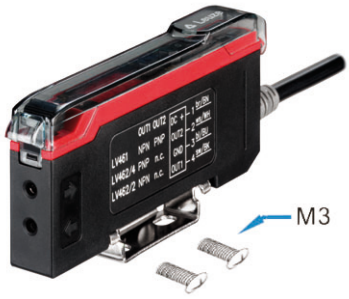

Alternatively, the amplifier can also be mounted without a DIN rail using the mounting accessory and M3 screws.

Installing the fiber optics

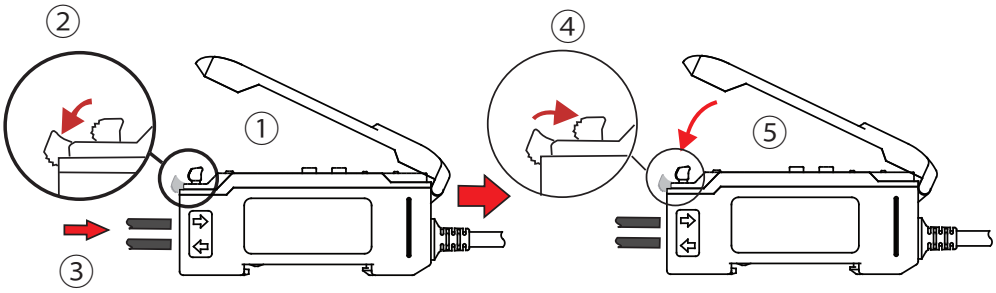

① Open the transparent protective cover.
② Push down the lever of the fiber optic clamp to open.
③ Lead the **KF/KFX/GF** type fiber optics in completely as far as they will go (ca. 12 mm deep) into the fiber optic intake.
When doing so, observe the transmitter/receiver assignment on the amplifier (transmitter at bottom / receiver on top).
④ Pull up the lever of the fiber optic clamp to close.
Check if the clamp is secure by pulling lightly on the fiber optics.
⑤ Close the transparent protective cover.

Operating and display elements

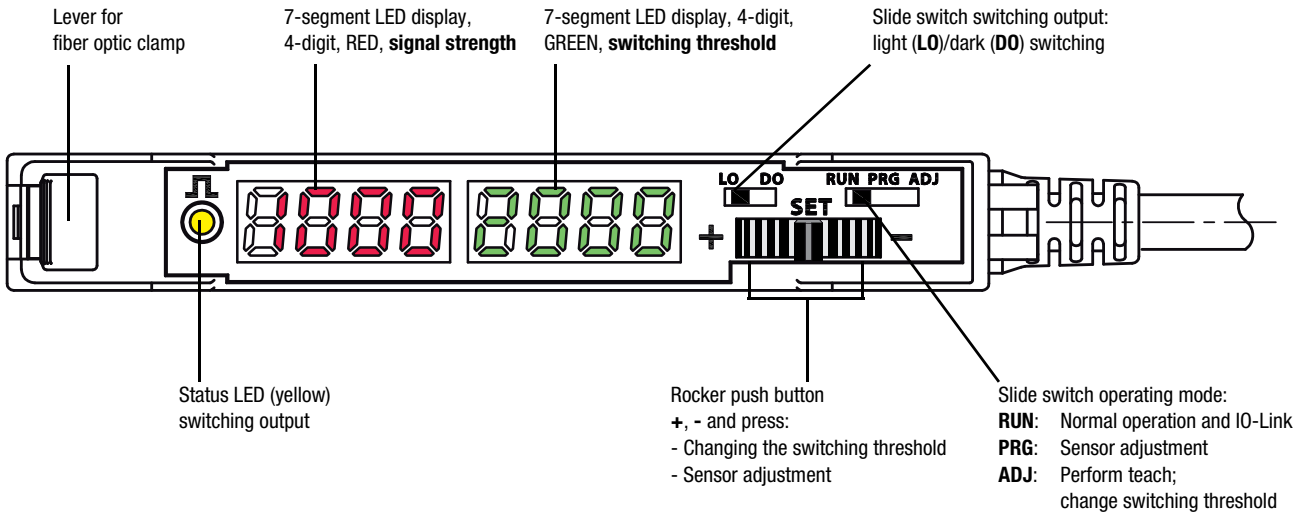

LV463.XR Long Range amplifier with 1 switching output for fiber optics

RUN PRG ADJ	Selector switch **Operating mode**	**RUN**: **ADJ**: **PRG**:	Normal operation and IO-Link - no settings possible via the operational controls Press rocker push button: the set teach is executed. Rock to left - right: change the switching threshold, left = **+** and right = **-**. Menu-driven device setting via display and rocker push button
LO DO	Selector switch **Switching output**	**LO**: **DO**:	Switching output **light switching**: If throughbeam fiber optics are installed, the switching output is active when the light path is free; if a scanning system is installed, the switching output is active when an object is detected. The status LED illuminates when the switching output is active. Switching output **dark switching**: The switching behavior is the inversion of the **light switching** setting.
+ SET −	Rocker push button **- Set switching threshold** **- Navigation in menu**	 Rock **+, -**: Button:	The **rocker push** button can be rocked **to the right** and **to the left** and **pressed** in the middle position. In the **ADJ** operating mode, the switching threshold can be increased (**+**) or decreased (**-**) by rocking. In the **PRG** operating mode, rock to navigate in the menu. Press the rocker push button in the middle position to accept a setting made in the **PRG** operating mode.
8888	Indicator **Signal strength**		In the **RUN** and **ADJ** operating modes, the display shows the current signal value. In the **PRG** operating mode, information on menu navigation appears on the display.
8888	Indicator **Switching threshold**		In the **RUN** and **ADJ** operating modes, the display shows the currently set switching threshold. In the **PRG** operating mode, information on menu navigation appears on the display.
	Status LED (yellow) **Switching output state**	LED **ON** LED **OFF**	Switching output active. Switching output inactive.

RUN operating mode - normal operation

RUN PRG ADJ

The **RUN** operating mode is the standard operating mode in which the sensor detects objects; it signals this according to the set functions. If the selector switch for the operating mode is in the **RUN** position, no changes to the device can be made via the operational controls. This setting is thus suitable for protection against unintended operation and changes to device settings.
For IO-Link operation, the **RUN** operating mode must be set.

NOTE

The **multi funct** multifunction input always takes precedence over the **Operating mode** selector switch.

This means that the amplifier can be taught via the multifunction input (remote teach) in the **RUN** operating mode as well.

PRG operating mode - sensor adjustment

RUN PRG ADJ

The LV463 can be adjusted to meet customer requirements with a simple menu-driven system.
To do this, set the **selector switch** for the **operating mode** to position **PRG**.

The menu consists of 14 successive subfunctions. Rock to right or left to freely navigate through the subfunctions.

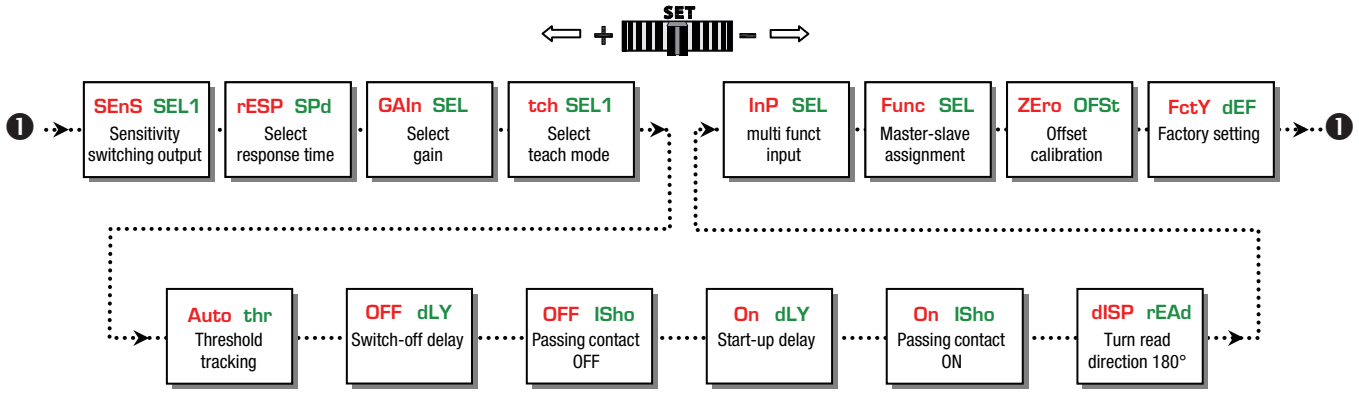

Selecting a subfunction and changing the setting

1. Rock to left or right to select the desired subfunction.
2. Press rocker push button in middle position. The currently set value is displayed statically.
3. Rock to right or left to display the selectable adjustment values - these flash slowly.
4. Accept the new value by pressing the rocker push button in the middle position.
   Fast flashing indicates that the new value is accepted.
5. Automatic return to the heading for the subfunction.
6. Press again to statically display the previously selected value.

Description of the subfunctions

Subfunction	Possible settings / value range	Factory setting (default)	Explanation
SEnS SEL1 Sensitivity in switching point OUT1	Std hiGh Lo	Std	The sensitivity in the switching point is adjusted via the hysteresis. **High**: Small hysteresis, e.g., for exact switching during object positioning. **Std**: Standard hysteresis; suitable for most applications. **Lo**: Large hysteresis, e.g., for very reliable switching on objects. Also for applications with strong vibrations on probe.
rESP SPd Select response time	t_{rESP} = 24 ms (signal range **XLR**) 8 ms (signal range **LR**) 2 ms (signal range **STD**) 1000 µs (signal range **S**) 500 µs (signal range **HS**)	2 ms	The response time is the max. time required by the switching output to switch to the active state following a signal change at the input. From this, the switching frequency can be calculated as follows: $f = \frac{1}{2 \cdot t_{rESP}}$ [Hz] **Notice: A change to the response time is equivalent to a change to the signal range.**
GAIn SEL Select gain	Gain stage t_{rESP} = 24 ms: Gn 1 … Gn 7 8 ms: Gn 1 … Gn 6 2 ms: Gn 1 … Gn 6 1000 µs: Gn 1 … Gn 6 500 µs: Gn 1 … Gn 5 Auto GAIn	Auto GAIn	The gain stage can be set either by manually presetting the gain factor or automatically by selecting **Auto GAIn**. The left, red display shows the current signal value. The gain stage should be selected so that the signal value is approximately in the middle of the display area. If **Auto GAIn** is selected, the device automatically determines the optimum gain setting during teaching.
tch SEL1 Select teach mode OUT1	Teach modes 1 Pt tch (static), 2 Pt tch (static), dYn tch (dynamic)	1 Pt tch	Presetting a suitable teach process. To trigger the teach event, see ***Teaching operating mode***. **1-point teach, static**: during teaching, the current signal value is accepted as the new switching threshold. Actuate the rocker push button to make fine adjustments to the threshold. **2-point teach, static**: the switching threshold is calculated at approximately midway between two signal values, e.g., teach to two different objects or teach to the same object at two different distances from the probe. Example: signal value 1 = 100 digits, signal value 2 = 400 digits → Switching threshold = 280 digits. Actuate the rocker push button to **+** or **-** to make fine adjustments to the threshold. **Dynamic teach**: suitable for processes that cannot be stopped for teaching. When the teach event is started, the sensor begins to scan the signal values. On the left, red display, the signal values are constantly displayed. At the end of the teach event, the switching threshold is calculated at approximately midway between the smallest and largest signal value.
Auto thr Threshold tracking	Tracking the switching threshold oFF (aus), On (ein)	oFF	The function is only available during dynamic teaching. If the function is switched on, the switching threshold is automatically and continuously optimized by the sensor in such a way that maximum functional reliability is ensured. This can be used to compensate for, e.g., soiling or process changes. **Warning message**: thr ALrt: The limit of threshold tracking is reached - the sensor continues to operate. Cleaning and, if necessary, alignment of the fiber optics recommended **Error message**: thr Err: The limit of threshold tracking is exceeded - **the sensor stops operating**. Cleaning and, if necessary, alignment of the fiber optics urgently necessary
OFF dLY Switch-off delay	0 (off), 1 … 9999 ms (milliseconds)	0	**Switch-off delay** (OFF Delay): Individually adjustable from 1 … 9999 ms. Combination options → ***Combining timing functions***
OFF ISho Passing contact OFF	0 (off), 1 … 9999 ms (milliseconds)	0	**Passing contact on fall-back** (OFF 1-Shot): Individually adjustable from 1 … 9999 ms. Combination options → ***Combining timing functions***
On dLY Switch-on delay	0 (off), 1 … 9999 ms (milliseconds)	0	**Switch-on delay** (ON Delay): Individually adjustable from 1 … 9999 ms. Combination options → ***Combining timing functions***

Subfunction	Possible settings / value range	Factory setting (default)	Explanation
On ISho Passing contact ON	0 (off), 1 … 9999 ms (milliseconds)	0	**Passing contact on actuation** (ON 1-Shot): Individually adjustable from 1 … 9999 ms. Combination options → ***Combining timing functions***
dISP rEAd Turn read direction 180°	dISP rEAd, dISP rEAd	dISP rEAd (same read direction as other texts)	Changes the **read direction** of the two 7-segment displays by 180°.
InP SEL multi funct input	oFF, tch InP, SYnc PLc, SYnc Int	oFF	With the setting, you define the function of the **multi funct multifunction input** (pin 2/ws-WH). **oFF**: Pin/cable without function **tch InP**: Pin/cable can be used as teach input for line teach or for remote configuration. Further details on this topic → ***Line teach / remote teach***. → ***Remote configuration special function***. **SYnc PLc**: Pin/cable can be used as activation input. Further details on this topic → ***Synchronous operation of multiple amplifiers***. **SYnc Int**: Setting for multiplex operation of up to 6 fiber optic amplifiers. For this purpose, all **multi funct** multifunction inputs (pin 2/ws-WH) are connected to one another. The master unit (defined with the next subfunction) generates a timing signal that is received by the slave units (defined with the next subfunction) via the parallel connection. In a fixed time frame, each slave successively activates its transmitter for a brief time and delivers a signal value. To avoid mutual interference, the transmitter is then deactivated again. Further details on this topic → ***Multiplex operation of multiple amplifiers***.
Func SEL Master-slave assignment	SL 1, SL 2, SL 3, SL 4, SL 5, mA 2, mA 3, mA 4, mA 5, mA 6	SL 1	These settings only need to be made if **multiplex operation** (master-slave operation) of multiple sensors is desired. A maximum of 6 sensors can be synchronized with one another in multiplex operation. Here, **exactly one master** and **1 … 5 slaves** are always needed. **Settings for master**: mA n (number): Defines that this unit functions as a master and a total of **n** sensors were wired in parallel. **Value range n = 2 … 6**. Example: mA 4 means: unit is the **master**, a total of 4 sensors are wired to one another via the **multi funct** multifunction input. **Setting for slaves**: SL n (number): Defines that this unit functions as a slave and has individual address **n**. **Value range address n = 1 … 5**. Example: SL 3 means: unit is a**slave** with individual address **3**. Further details on this topic → ***Multiplex operation of multiple amplifiers***
ZEro OFSt Offset calibration	no, YES	no	This subfunction is used for **suppressing an offset signal** that can result, e.g., from crosstalk between transmitter and receiver at the fiber optic head. To activate this function, select **YES** and confirm the selection by pressing the rocker push button. The current signal value is now set to **0**. To perform another offset calibration, the previous calibration must first be reset. To do this, select **no** and confirm by pressing the rocker push button. Now again perform the offset calibration as previously described. **Note**: **Resolution is lost when using offset suppression!** Example: display area = 4000 digits, offset value = 550 digits → Remaining resolution = 3450 digits
FctY dEF Factory setting	no, YES	no	**Attention!** **Resets all sensor settings to factory settings.** If desired, select **YES** and execute by pressing the rocker push button.

Tip!

The maximum operating range can be achieved as follows:
- Set rESP SPd to 24 ms (signal range **XLR**).
- Set GAIn SEL to the highest gain stage.
- The switching threshold can be set to minimum 32 digits, the amplifier detects objects up to display value **0**.

Time functions

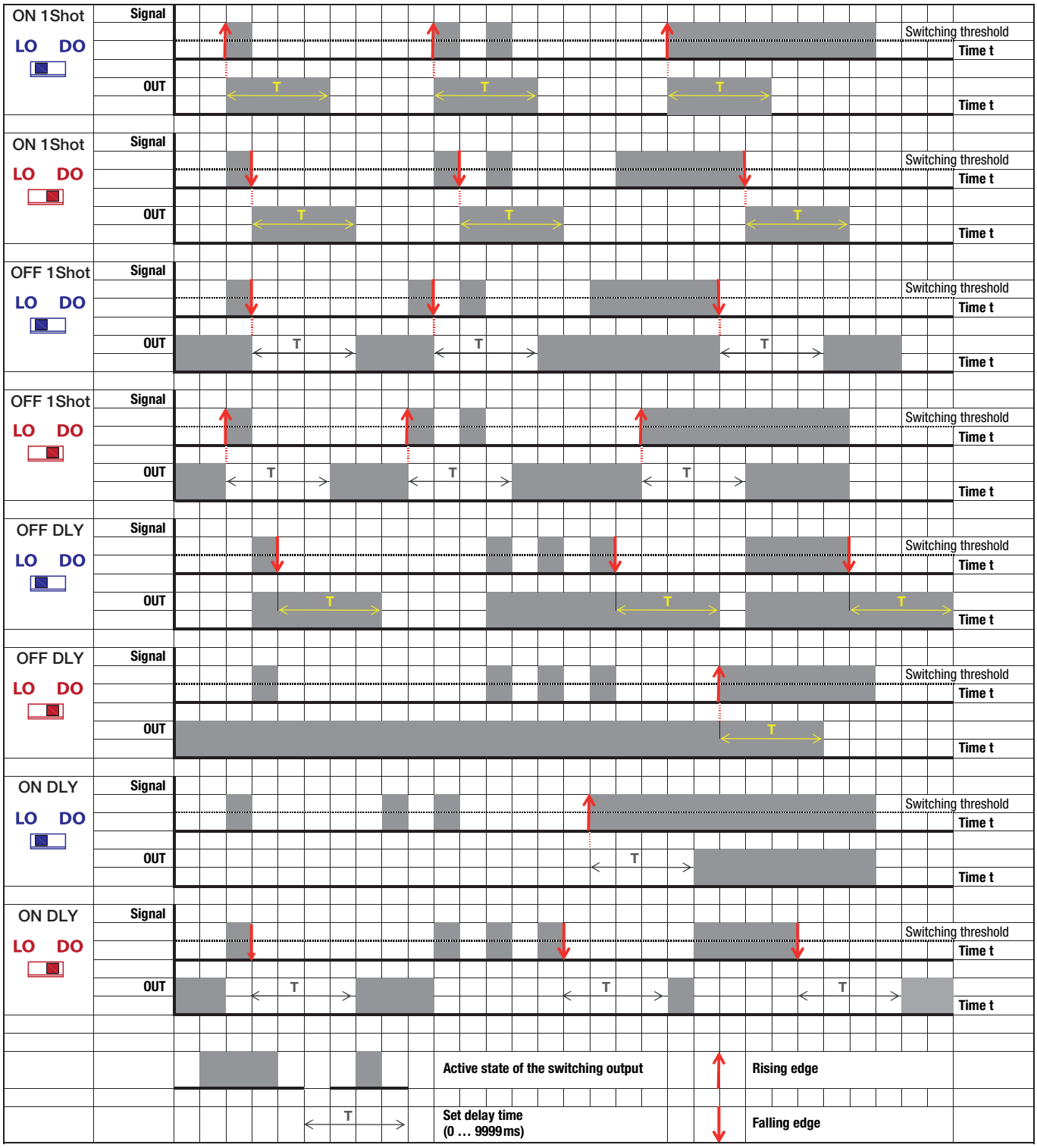

Combining timing functions

Timing functions can only be combined to a limited extent. Impermissible combinations are suppressed from the subfunctions menu. Here is an overview of the permissible combinations (•):

	OFF dLY Switch-off delay	OFF lSho Passing contact OFF	On dLY Switch-on delay	On lSho Passing contact ON
OFF dLY Switch-off delay		•	•	
OFF lSho Passing contact OFF	•			
On dLY Switch-on delay	•			•
On lSho Passing contact ON			•	

Teaching operating mode

Set the selector switch for the operating mode to the **ADJ** position.

Depending on the setting of the **Select teach mode** subfunction (tch SEL1), one of the following teach modes appears:

- **Static 1-point teach**
- **Static 2-point teach**
- **Dynamic teach**

Teach process

Step	Static 1-point teach	Static 2-point teach	Dynamic teach
①	Place object in light beam. The red display shows the signal value, the green display the current switching threshold.	Place object in light beam. The red display shows the signal value, the green display the current switching threshold.	Press the rocker push button. The green display shows dYn, the red display the current signal value. The amplifier now scans signal values for approx. 1 minute.
②	Press the rocker push button; the teach value is accepted.	Press the rocker push button, **first** teach value is accepted.	Move several objects through the light beam; to end the event, press the rocker push button again. After the scanning time elapses, the teach event ends automatically.
③	Following a successful teach, PASS appears on the green display and the signal value is displayed as the new switching threshold. In the event of a faulty teach, FAIL appears on the red display. In this case, the signal value may be too small and cannot be accepted as a teach value (→ ***Table with minimum teach values as a function of the setting***). Check object and/or placement and repeat event.	2nd appears on the green display; the red display shows the current signal value. Place object 2 or object at distance 2 and press the rocker push button **within one minute**. The **second** teach value is accepted. If the rocker push button is not pressed within one minute, the teach event is interrupted and the previous switching threshold is retained. Following a successful teach, PASS appears on the green display. The new switching threshold now lies approximately midway between the two taught signal values. In the event of a faulty teach, FAIL appears on the red display. In this case, the minimum distance between the two teach points may be too small (→ ***Table with minimum teach values as a function of the setting***). Try to set a larger distance between the two signal values and repeat the event.	Following a successful teach, PASS appears on the green display. The new switching threshold now lies between the maximum and the minimum of the scanned signal values. In the event of a faulty teach, FAIL appears on the red display. In this case, the minimum distance between the scanned signal values may be too small (→ ***Table with minimum teach values as a function of the setting***). Try to set a larger distance between the signal values and repeat the event.
④	The switching threshold can be freely increased or decreased at a later time by rocking the rocker push button to the left (+) and right (-). The change is accepted if both displays flash briefly several times.	The switching threshold can be freely increased or decreased at a later time by rocking the rocker push button to the left (+) and right (-). The change is accepted if both displays flash briefly several times.	The switching threshold can be freely increased or decreased at a later time by rocking the rocker push button to the left (+) and right (-). The change is accepted if both displays flash briefly several times.

Tip!
For reliable function, the difference between the signal value while an object is present and the signal value with no object should be at least 10 … 20%. In general: the larger the difference, the more reliable the detection.

Line teach (remote teach)

Subfunction setting:

Signal level at **multi funct** teach input:

The following description applies to PNP switching logic!

With the NPN models, the signal levels are inverted!

Timing for the line teach

Which line teach is performed is set in the **Select teach mode** tch SEL1 subfunction.
Depending on the setting, this may be a static 1-point teach, a static 2-point teach or a dynamic teach.

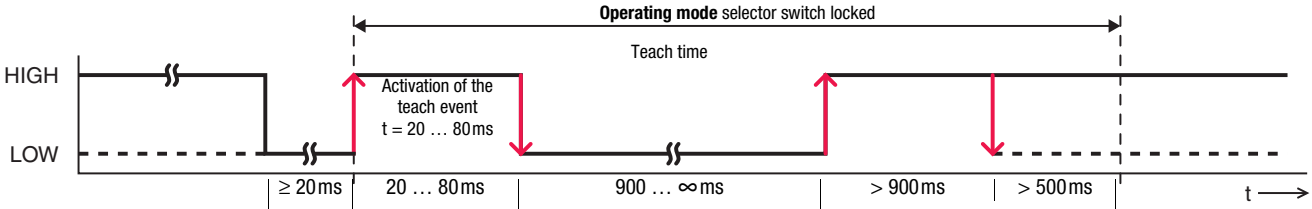

Before teaching:

- - - LOW level = selector switch **Operating mode unlocked**

——— HIGH level = selector switch **Operating mode locked**

A signal change is only necessary if a HIGH signal is applied prior to the teach.

Action begins with the rising edge:

t_{Teach} = 20 … 80ms

Operating mode selector switch locked

The teach event begins with the falling edge.
1. **Static 1-point teach**: The current signal value is taken over as the teach value with the falling edge.
2. **Static 2-point teach**: The current signal value is taken over as **teach value 1** with the falling edge.
3. **Dynamic teach**: The sensor begins to scan the signal values with the falling edge

Note: The sensor remains in teach mode without timeout until the next rising edge.

The teach event is ended with the rising edge:
1. **Static 1-point teach**: No further action
2. **Static 2-point teach**: The current signal value is taken over as **teach value 2** with the rising edge.
3. **Dynamic teach**: Scanning of the signal values ends with the rising edge.

The teach event ends 900 ms after the rising edge, and the sensor again operates in normal operation.

If the **Operating mode** selector switch is to be operable again, a LOW signal must be applied. The switch can again be operated 500 ms after the falling edge.

Notes:
- The display on the two displays during the line teach corresponds to the description for the manual teach.
- The line teach begins with the rising edge at the teach input independent of the position of the **Operating mode** selector switch.

Locking the amplifier via the teach input

A **static HIGH signal** (≥ 20ms) on the teach input **locks the Operating mode selector switch** independent of its position. No manual configuration or adjustment can be performed (e.g., protection against erroneous operation or manipulation).

If the teach input is not connected or if a **static LOW signal** is applied, the **Operating mode selector switch is unlocked** and all functions can be accessed as described.

ПРОМЭЛЕКТРОНИКА / sales@prom-elec.com

Special function: Remote configuration

In addition to the described line teach, a simple pulse-pause signal at the teach input can be used to perform a partial configuration of the device. To do this, make this setting in the submenu:

NOTE

For the pulse sequences described in the following for device configuration via the teach input, the following conventions apply:

- **Signal level**: The description applies for **PNP devices** (active high). For NPN devices (active low), the pulse sequences are to be inverted accordingly.
- **Pulse length T**: HIGH and LOW pulses are the same length: **0.04s < T < 0.8s**.
- **Pause length P**: The following applies for the pauses between the pulse sequences: **P > 1s**.

Settings for switching output OUT1

Teach mode OUT1	**1-point teach**	T P T T T T T P T
	2-point teach	T P T T T T T P T T T
	Dynamic teach	T P T T T T T P T T T T T
Switching function OUT1	**Light switching**	T P T T T T T T T P T
	Dark switching	T P T T T T T T T P T T T

Setting the response time and the gain

Select response time	**Response time 500µs**	T T T P T T T P T
	Response time 1000µs	T T T P T T T P T T T
	Response time 2ms	T T T P T T T P T T T T T
	Response time 8ms	T T T P T T T P T T T T T T T
	Response time 24ms	T T T P T T T P T T T T T T T T T
Select gain	**Auto GAIn**	T T T P T P T
	Gn1	T T T P T P T T T
	Gn2	T T T P T P T T T T T
	Gn3	T T T P T P T T T T T T T
	Gn4	T T T P T P T T T T T T T T T
	Gn5	T T T P T P T T T T T T T T T T T
	Gn6	T T T P T P T T T T T T T T T T T T T 1)
	Gn7	T T T P T P T T T T T T T T T T T T T T T 2)

1) Not adjustable for response time 500 µs
2) Not adjustable for response times 500 µs, 1000µs, 2ms and 8 ms

Multiplex operation of multiple amplifiers

If multiple light axes are arranged immediately adjacent to one another, mutual interference may occur, recognizable by a strongly fluctuating display.

To avoid this undesirable behavior, **up to 6 devices can operate in multiplex operation**. To do this, it is only necessary to connect the **multi funct** multifunction input (pin 2/ws-WH) of all participating amplifiers in addition to the voltage supply and switching signal.

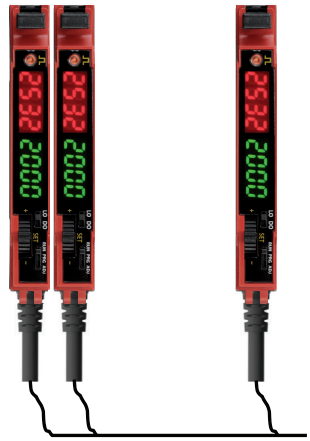

All **multi funct** multifunction inputs (pin 2/ws-WH) are connected in parallel

- For settings, see subfunctions:

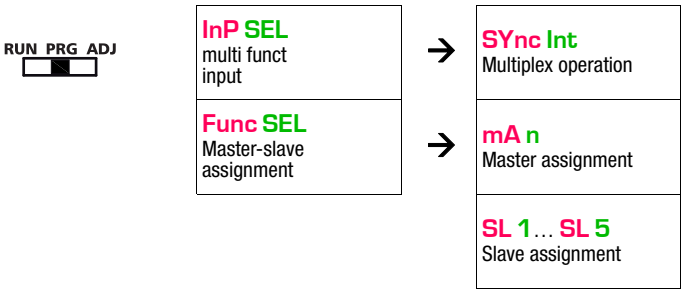

- Maximum 6 / minimum 2 units: 1 x master + 1 … 5 slaves.
- Each unit can be either a master (mA or slave (SL).
- The master also requires the information on the number of units connected in parallel (n = 1 + number of slaves).
- Each slave also receives an individual **address 1 … 5** (max.)
- The master generates a timing signal on pin 2 or on cable ws/WH.
- Each slave switches on its transmitter for 1 ms depending on its address.
- In multiplex operation, the cycle time is based on the total number of units: **cycle time = number of units • 1.5ms + 0.5ms.**

Synchronous operation of multiple amplifiers / operation with activation input

If may also be necessary to query multiple light axes **simultaneously** (synchronously) . There are two ways to do this:

Model 1:

Wiring and adjustment according to section ***Multiplex operation of multiple amplifiers***, but all slaves receive an **identical address from 1 … 5**. Result: Master and slaves have a time offset of 1.5 ms; slaves with the same address operate synchronously.

Model 2:

Synchronous operation through an external activation signal at the **multi funct** input (pin 2/ws-WH). Subfunction setting:

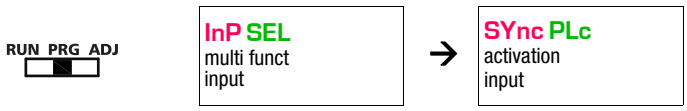

Function:

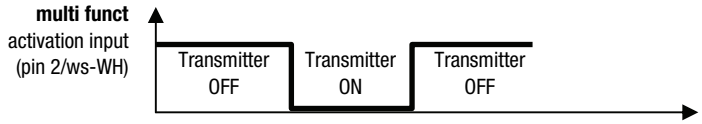

The transmitter is **deactivated with a high signal**. The transmitter is **activated without actuation** or **with a low signal**.