DMU/HTU 418B/430B

Ultrasonic sensors ADVANCED with IO-Link

en 05-2019/05/08 50122144

15 - 30 V DC

IO-Link

25 … 400mm
100 … 700mm
150 … 1000mm
150 … 1300mm
300 … 3000mm
600 … 6000mm

- Function largely independent of surface properties, ideal for detection of liquids, bulk materials, transparent media, …
- Small dead zone at long range
- Temperature-compensated range and measurement range
- 1 PNP switching output (NPN) and 1 analog output 0 … 10V / 4 … 20mA
  OR
  2 independent PNP switching outputs
- NEW – Both outputs can easily be taught using a button
- NEW – Stable all-metal design
- NEW – Process data and configuration via IO-Link interface
- NEW – Five operating modes: scanning, synchronous, multiplex, activation and throughbeam operation

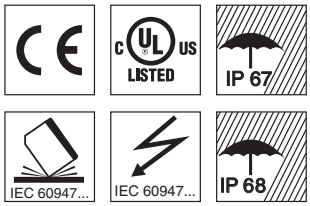

Accessories:

(available separately)

- Mounting systems
- Mounting adapter M18-M30: BTX-D18M-D30 (Part no. 50125860)
- Cables with M12 connector (K-D …)
- Teach adapter PA1/XTSX-M12 (Part no. 50124709), only for HTU Advanced
- USB IO-Link master 2.0 (Part no. 50121098)

Dimensioned drawing

HTU418B-…
DMU418B-…

HTU430B-3000...
DMU430B-3000...

HTU430B-6000...

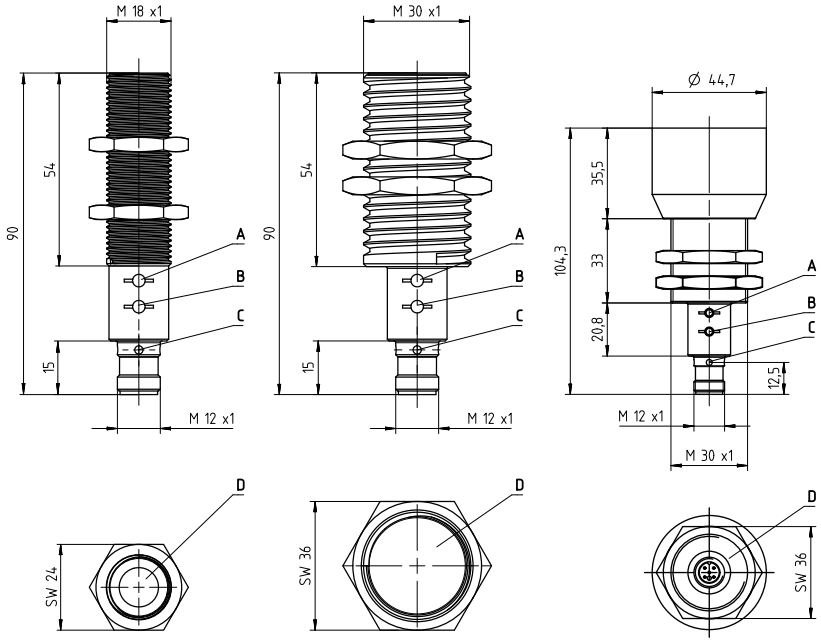

A Control button **2**
B Control button **1**
C Indicator diodes
D Active sensor surface

Electrical connection

DMU418B-…X3/LTV-M12
DMU418B-…X3/LTC-M12
DMU430B-…X3/LTV-M12
DMU430B-…X3/LTC-M12

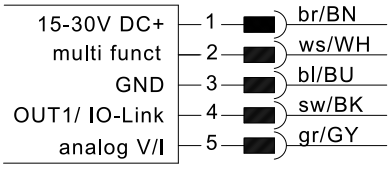

HTU418B-…X3/LT4-M12
HTU430B-…X3/LT4-M12

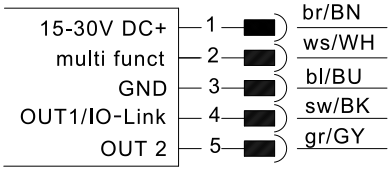

Factory setting for pin 2 **multi funct**: teach input

We reserve the right to make changes • DS_U418B_U430B_IOLINK_en_50122144.fm

ПРОМЭЛЕКТРОНИКА / sales@prom-elec.com

About this document

NOTE

This document supplements the device-specific data sheets for the ADVANCED sensors of the DMU418B, DMU430B, HTU418B and HTU430B series with information and details on the IO-Link interface.

IO-Link interface

All sensors of the ADVANCED line have an IO-Link interface in accordance with specification 1.1 (October 2011). Devices can be simply, quickly and thus inexpensively configured via this interface. Furthermore, the sensor transmits its process data and makes diagnostic information available through it.

Device-specific IODD

At www.leuze.com in the download area for ultrasonic sensors you will find the IODD zip file with all data required for the installation. Please unpack the zip file in any random directory on your hard drive.

In this directory you should find, for example, for a HTU418B the following files (the same is true for a HTU430B/DMU418B/DMU430B, but with respectively adapted file names):

help	06.05.2014 13:15	Dateiordner	
button.png	04.10.2011 09:03	PNG-Datei	1 KB
DS_HTU418BX3LT4_de_50124879.pdf	05.02.2014 17:55	PDF-Datei	755 KB
DS_HTU418BX3LT4_en_50124879.pdf	05.02.2014 17:55	PDF-Datei	753 KB
HTU_3072-20140331-iodd1.1.zip	28.05.2014 09:13	zip Archive	1.614 KB
iodd.js	04.10.2011 09:03	JScript-Skriptdatei	3 KB
iodd_print.css	04.10.2011 09:03	Kaskadierendes Stylesheet-Dokument	3 KB
iodd_screen.css	29.05.2012 16:38	Kaskadierendes Stylesheet-Dokument	5 KB
Leuze_electronic-htu_3072-20140331-IODD1.1.xml	07.04.2014 12:01	XML-Dokument	49 KB
leuze_electronic-htu_3072-20140331-IODD1.1-de.html	07.04.2014 12:01	HTML-Dokument	109 KB
leuze_electronic-htu_3072-20140331-IODD1.1-en.html	07.04.2014 12:01	HTML-Dokument	108 KB
Leuze_electronic-htu_3072-20140331-IODD1.1Extensions.xml	07.04.2014 12:16	XML-Dokument	48 KB
Leuze_electronic-HTU_DMU_M18-icon.png	11.07.2013 15:53	PNG-Datei	4 KB
Leuze_electronic-HTU_DMU_M18-pic.png	11.07.2013 15:53	PNG-Datei	19 KB
Leuze_electronic-HTU_DMU_M30-icon.png	11.07.2013 15:53	PNG-Datei	5 KB
Leuze_electronic-HTU_DMU_M30-pic.png	11.07.2013 15:53	PNG-Datei	23 KB
leuze_electronic-logo.png	04.10.2011 09:03	PNG-Datei	6 KB
ReadMe.rtf	16.11.2011 12:16	Rich Text Format	86 KB

IO-Link parameter documentation

In order to get the complete description of the IO-Link parameters, double-click on one of the two following HTML files (…-de.html: German; …-en.html: English):

leuze_electronic-htu_3072-20140331-IODD1.1-de.html	07.04.2014 12:01	HTML-Dokument	109 KB
leuze_electronic-htu_3072-20140331-IODD1.1-en.html	07.04.2014 12:01	HTML-Dokument	108 KB

Notes

Observe intended use!

- This product is not a safety sensor and is not intended as personnel protection.
- The product may only be put into operation by competent persons.
- Only use the product in accordance with its intended use.

Functions which are configurable via the IO-Link interface

Function block	Function	Description
Operating mode	Standard operation	The sensor operates as a diffuse sensor with background suppression.
	Multiplex operation	A max. of 10 sensors – 1 master and 9 slaves – can be wired together in a network. To do this, the sensors must be electrically connected with one line. The master generates a timing signal and all networked sensors are activated with time-delay.
	Synchronous operation	A max. of 10 sensors – 1 master and 9 slaves – can be wired together in a network. To do this, the sensors must be electrically connected with one line. The master generates a timing signal and all networked sensors are activated simultaneously.
	Activation operation	The sensor can be activated through an external signal.
	Operation as throughbeam sensor	The sensor can either be configured as a scanner or as a throughbeam sensor. Operation as a throughbeam sensor requires 2 sensors, which are electrically connected through one line.
Switching outputs OUT1 / OUT2	Switching point 1/2	The switching points can be directly entered as distance value in mm.
	Switching output (OUT1 and OUT2)	Adjustment as PNP or NPN switching output.
	Switching function	Adjustment as NC / NO contact.[1)]
	Switching behavior in the case of error	The switching behavior of output OUT1 of the sensor, for objects which are located outside of the operating range, can be adjusted.
	2-point behavior	If a switching output is to operate with 2 switching points, a choice can be made between 2-point window-teach (factory setting) or 2-point teach (e.g. for simple pump controls with minimum and maximum fill levels).
	Delay times	The time module can be used to configure a switch-on or switch-off delay at the output. This delay time is dependent on the update interval of the respective device and is calculated using the following formula: Delay [ms] = Update interval [ms] * Switch-on/-off delay
	Teach switching output OUT1	The switching output OUT1 can be taught via the IO-Link interface.
	Teach offset	An additional or shorter distance at the switching point can be entered directly as a distance value in mm. This parameter applies only for 1-point teach.
	Teach lock	Adjustment for locking of control buttons.
Analog output OUT2	Analog start value	The distance for the start point of the measurement range can be entered directly in mm.
	Analog end value	The distance for the end point of the measurement range can be entered directly in mm.
	Direction of the characteristic curve	Configuration option for rising or falling characteristic curve.
	Output range	For devices with voltage output: 0 … 10V (factory setting); 0 … 5V; 1 … 6V. For devices with current output: 4 … 20mA (factory setting); 0 … 20mA.
Temperature	Temperature compensation	Adjustment option for internal (sensor works with the integrated temperature sensor) or external (with a constant application temperature, this can be manually entered. The sensor then compensates the measured values at a fixed rate with this temperature).
	Unit	Adjustment option to ºC or ºF.
	Temperature value	Entry temperature value in ºC or ºF (if external temperature compensation is desired).
Diagnosis	LED behavior	Adjustment option for the LED behavior in IO-Link operation
	Signal strength	Adjustment option for displaying the signal strength via the yellow LED for OUT1.

1) NO contact: normal switching behavior (not inverted switching);
NC contact: inverted switching behavior (inverted switching).

ПРОМЭЛЕКТРОНИКА / sales@prom-elec.com

Operating modes

Standard operation

In the standard mode (= factory standard setting), the sensor operates in the scanning mode with background suppression in accordance with the description in the product-specific data sheet. The sensor can be configured by means of the control buttons or be taught in this operating mode via pin 2 **multi funct**, configured as teach input. Alternatively, configuration of the outputs can also be performed via IO-Link.

Multiplex operation

In this operating mode the mutual interference of adjacent sensors can be reliably avoided. For this, sensors of the same type are wired together in a network according to the subsequent diagram.

There must always be 1 master and, depending on the desired size of the network, 1 … 9 slaves. The devices operate in multiplex operation with a **cyclically time-delayed transmission pulse** and are switched to a passive state outside of the active phase. The response time of the individual sensors in the network is therefore prolonged in comparison to the response time of a single sensor by the quantity of networked sensors.

Multiplex operation wiring schematic

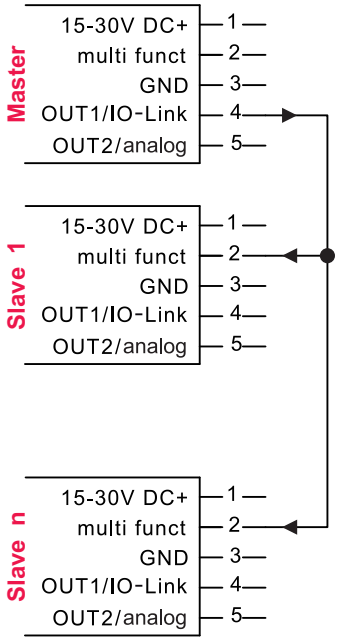

Sensor addressing is set via IO-Link parameter **Multiplex Mode Address**.

The following applies:

Slave: Number 1 … 9; slave address n = 0 … 8

Master: Master address **>** slave address, i.e. 1 … 9

NOTE

Please make certain that the wiring is performed according to the connection diagram.
The sensor with the highest address in network is the master and is connected to pin 4. All slaves are connected in parallel to pin 2.

Because of the wiring, switching output 1 is generally no longer available to the master!

In case of a **HTU418B/HTU430B master**, the switching output 2 operates according to standard operation.
The LEDs on the device show the state of output 2.

In case of a **DMU418B/DMU430B master**, the analog output operates according to standard operation.
The green LED indicates whether an object is located within the operating range.
The yellow LED has no function.

Response time in multiplex operation

Operating range	Cycle time t_{cycle} [ms]	Max. response time [ms] 1)	Min. response time [ms] 1)
25 … 400mm	12ms	$(7*n+2)*t_{cycle}$	$(3*n+2)*t_{cycle}$
100 … 700mm	13ms		
150 … 1000mm	18ms	$(3*n+2)*t_{cycle}$	$(1*n+2)*t_{cycle}$
150 … 1300mm	18ms		
300 … 3000mm	38ms		
600 … 6000mm	76ms		

1) n = number of sensors (master + number of slaves)

NOTE

The **max. response time** results if an object suddenly enters the operating range.

The **min. response time** results if an object was previously located outside of the operating range and is then pushed into the operating range.

Example:
A network with 3 sensors (1 master, 2 slaves) and operating range 150 … 1300mm has a **total response time** of between **(1*3+2)*18ms = 90ms** and **(3*3+2)*18ms = 198ms**.

Synchronous operation

In this operating mode the mutual interference of adjacent sensors can be avoided. For this, sensors of the same type are wired together in a network according to the subsequent diagram.

There must always be 1 master and, depending on the desired size of the network, 1 … 9 slaves. The devices work in synchronous operation with a **simultaneous transmission pulse**.

Synchronous operation wiring schematic

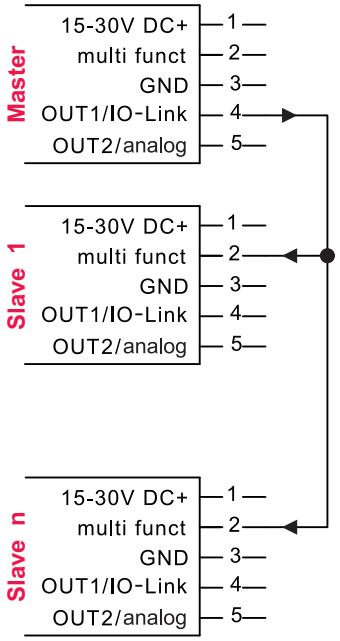

In contrast to multiplex operation, addressing of the sensors is unnecessary.

NOTE

Please make certain that the wiring is performed according to the connection diagram.
The sensor that is connected to pin 4 is the master and generates the synchronisation signal for all other slave sensors in the network. These are connected in parallel to pin 2.

Because of the wiring, switching output 1 is generally no longer available to the master!

In case of a **HTU418B/HTU430B master**, the switching output 2 operates according to standard operation.
The LEDs on the device show the state of output 2.

In case of a **DMU418B/DMU430B master**, the analog output operates according to standard operation.
The green LED indicates whether an object is located within the operating range.
The yellow LED has no function.

Response time in synchronous operation

Operating range	Typ. response time
25 … 400mm	24ms
100 … 700mm	26ms
150 … 1000mm	18ms
150 … 1300mm	18ms
300 … 3000mm	38ms
600 … 6000mm	76ms

Activation operation

In this operating mode, the transmitter of a sensor can be switched on by an external activation signal (**UB** at pin 2 **multi funct**). The transmitter is off if the activation signal is passive (**0V** at pin 2 **multi funct**).

This operating mode can also be used to avoid the mutual interference of adjacent sensors. The number of activated sensors is thereby discretionary and the sensors behave as in the standard operation.

Activation operation wiring schematic

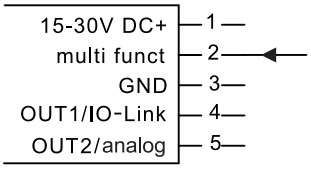

Activation signal: active high (U_B) = sensor active
inactive low (0V) = sensor not active

ATTENTION

As long as the activation signal at pin 2 is inactive low (0V), the state of the outputs remains frozen (last valid state).

Activation signals in activation operation

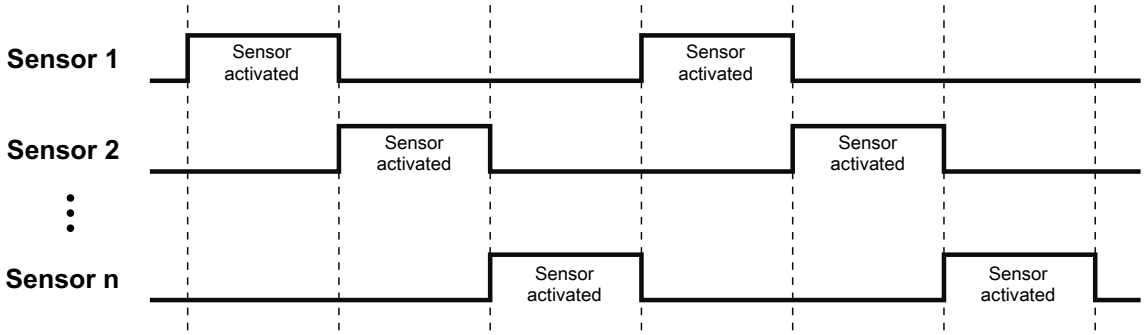

NOTE

With the min. activation time, the sensor operates faster, but also with a low analysis depth. If a high functional reliability is required, we recommend doubling the activation time.

Min. activation time in activation operation

Operating range	Minimum length of activation signal
25 … 400mm	38ms
100 … 700mm	41ms
150 … 1000mm	38ms
150 … 1300mm	38ms
300 … 3000mm	78ms
600 … 6000mm	154ms

Throughbeam operation

In this operating mode, one throughbeam ultrasonic sensor can be put into effect from 2 identical sensors.

Benefits:

- Twice the range in comparison to the diffuse reflection mode.
- Prevention of the dead zone.

Throughbeam operation wiring schematic

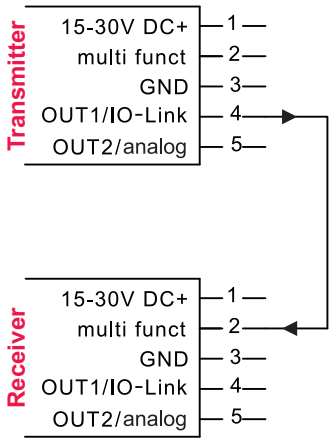

NOTE

Please make certain that the wiring is performed according to the connection diagram. Each sensor can be a transmitter or a receiver. Just which function is actually performed is determined by the wiring.

In case of a transmitter, the green LED lights up permanently to show the device's readiness for operation.

The receiver behaves as in standard operation, but the control buttons are nonfunctional.

Switching outputs: 2 point behavior

If a switching output is supposed to operate with 2 switching points, a choice can be made between 2-point window-teach (factory setting) or 2-point-teach (e.g. for simple pump controls with minimum and maximum fill levels). Shown below are the diagrams for the switching behavior.

Switching behavior in 2-point window-teach

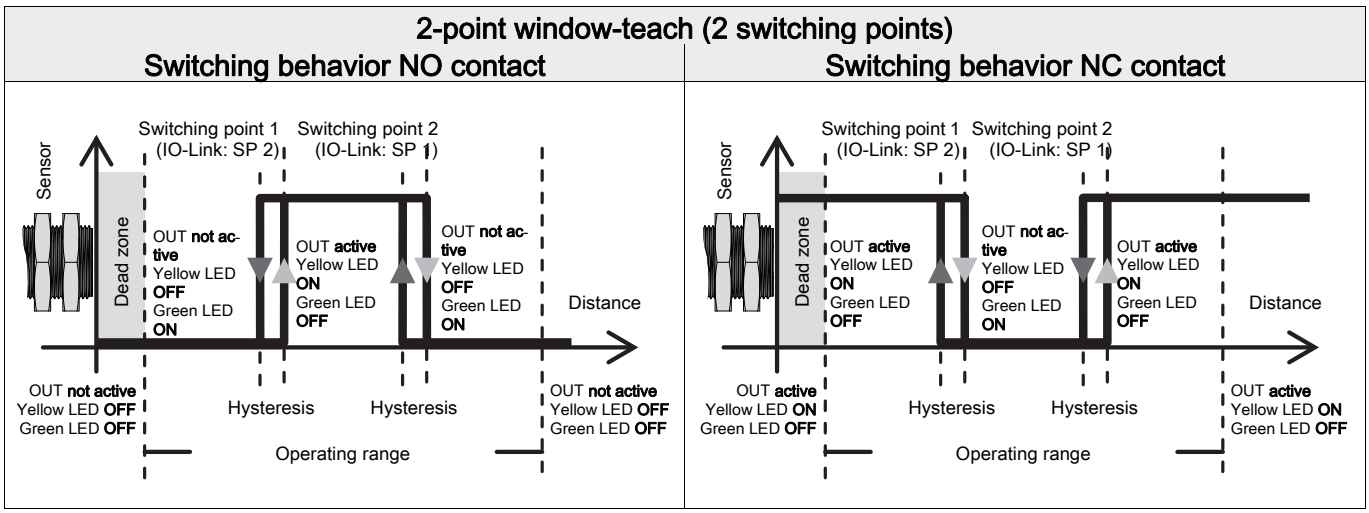

Switching behavior in 2-point teach

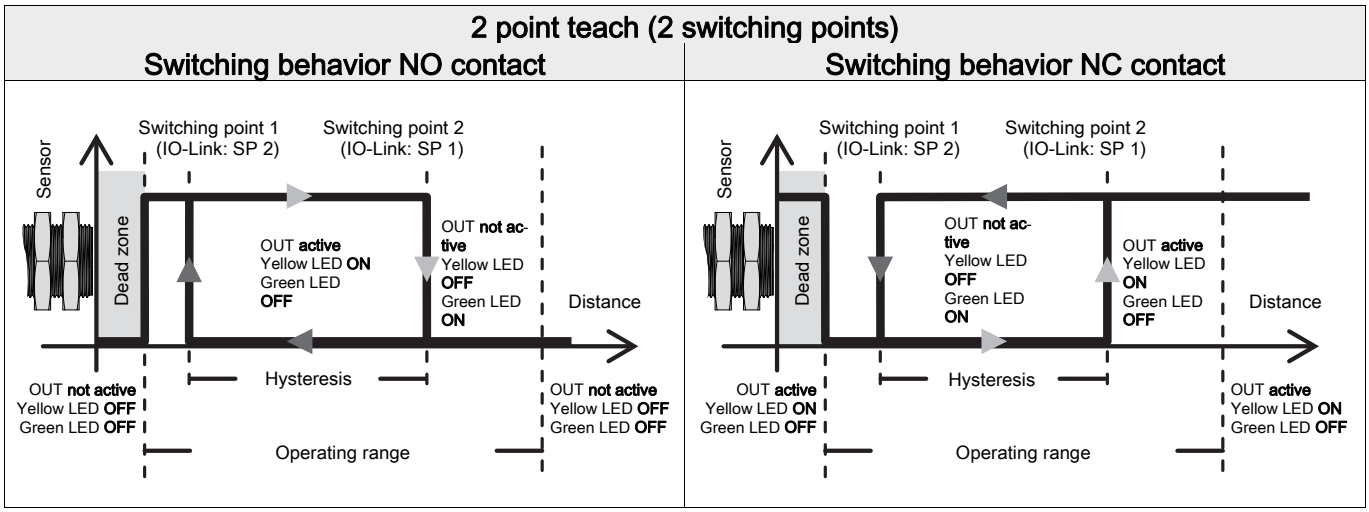

Note!
The switching behavior is not defined in the dead zone.

ATTENTION

Designations in this document	Designations IO-Link
Switching point 1 = close	SP 2 = close
Switching point 2 = remote	SP 1 = remote
Distance switching point 2 > distance switching point 1	Distance SP 1 > distance SP 2

Values to be observed for switching outputs

Detection range	Switching hysteresis	Minimum distance between the switching points (switching output)
25 … 400 mm	5 mm	50 mm
150 … 1000 mm	10 mm	100 mm
150 … 1300 mm	10 mm	100 mm
300 … 3000 mm	25 mm	250 mm
600 … 6000 mm	50 mm	500 mm

Analog output - output ranges and minimum distances

Output range	Error values	
	Min.	Max.
0 … 20mA	0mA	20.5 … 21.1mA
4 … 20mA 1)	3.5 … 3.8mA	20.5 … 21.1mA
0 … 10V 1)	0 V	10.5 … 11V
0 … 5V	0 V	5.5 … 6V
1 … 6V	0 … 0.5V	6.5 … 7V

1) Factory setting

Values to be observed for analog outputs

Detection range	Minimum distance between the start and end point of the measurement range
25 … 400mm	50mm
150 … 1300mm	100mm
300 … 3000mm	250mm
600 … 6000mm	500mm

Diagnosis - signal strength

Adjustment option for displaying the signal strength via the yellow LED for OUT1

If the function is activated, the current signal strength is output relative to the signal of the square standard target as a numerical value via the IO-Link interface. In addition, the yellow LED for OUT1 flashes at two different flashing frequencies depending on the signal strength.

$$\text{Signal strength at the current range [\%]} = \frac{\text{Current signal strength}}{\text{Signal strength on standard target}} \cdot 100\%$$

Flashing frequency of the yellow LED for OUT1

Signal strength	Flashing frequency of yellow LED
< 20%	Constantly OFF
20 … 50%	Flashes slowly
50 … 80%	Flashes rapidly
> 80%	Constantly ON

Standard targets

Range	Size of the standard target
Up to 400mm	Plate 20x20mm
Up to 1300mm	Plate 100x100mm
Up to 3000mm	Plate 100x100mm
Up to 6000mm	Plate 100x100mm

Application notes for container filling level control

The **2-point teach** can be utilized for a simple min./max. pump control.

To do this, the **sensor is configured as a normally closed (NC) contact** and the minimum and maximum fill levels of a container are assigned as the following:

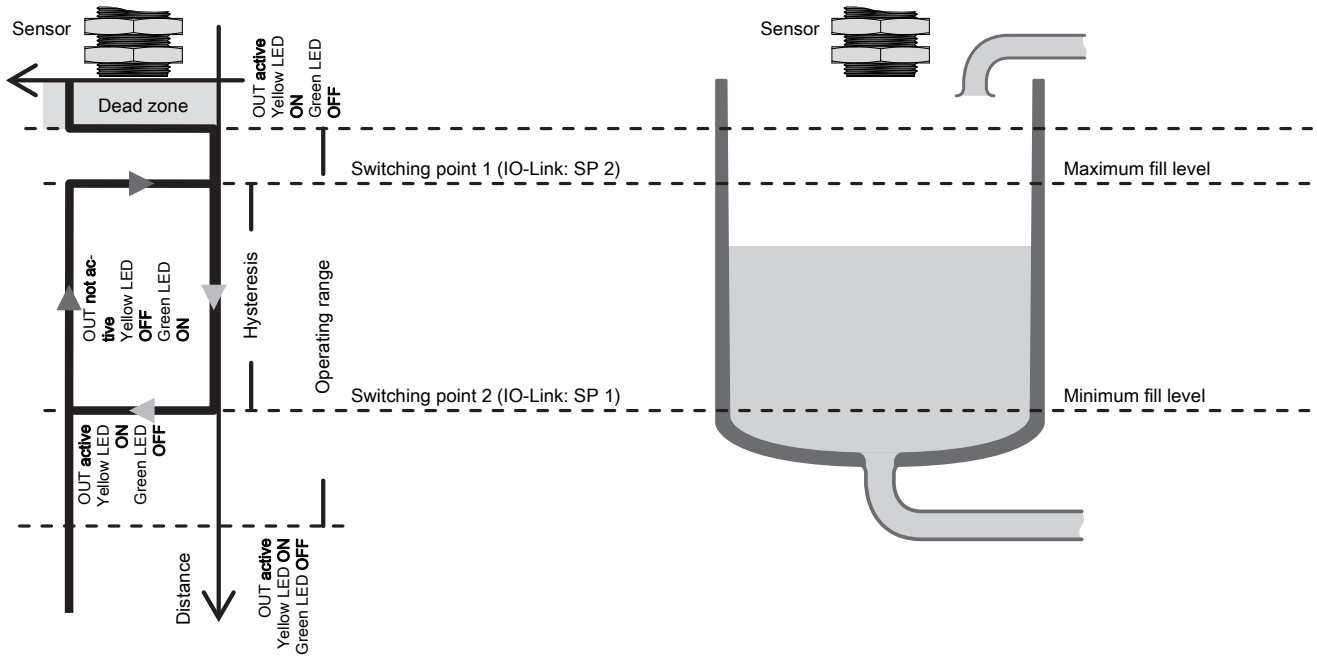

If the container is empty, e.g. after a cleaning or an initial filling, the sensor must first send an active control signal for a pump which fills the container up to the maximum fill level.

The control signal now becomes passive and the pump switches off. This is followed by the extraction from the container until the minimum fill level has been attained. The sensor now sends an active control signal again to the pump, which fills up the container until the maximum fill level has been attained.