SMART
SENSOR
BUSINESS

Leuze electronic

the sensor people

DDLS 200

Bus-capable optical data transmission

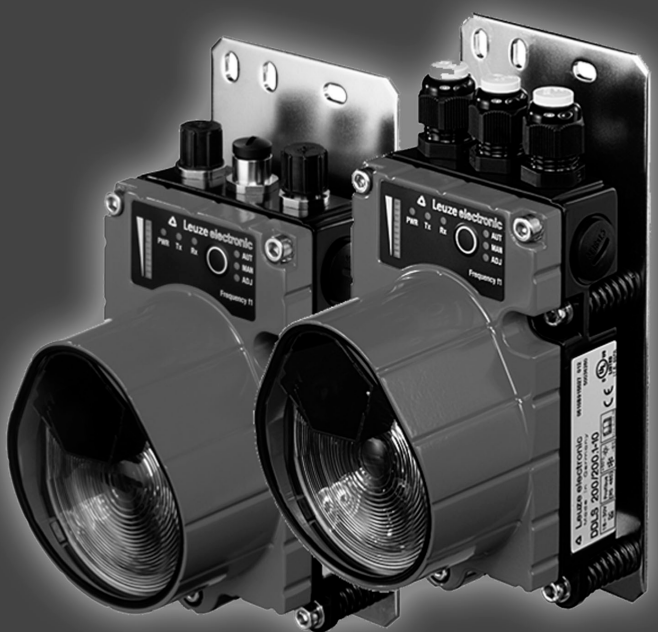

EN 2020/01/14 50143516
We reserve the right to make technical changes

Original operating instructions

ПРОМЭЛЕКТРОНИКА / sales@prom-elec.com

© 2020

Leuze electronic GmbH + Co. KG

In der Braike 1

D-73277 Owen/Germany

http://www.leuze.com

1 General information 4
1.1 Explanation of symbols 4
1.2 Declaration of Conformity 4
1.3 Short description 4
1.4 Operating principle 5
2 Safety notices 6
2.1 Safety standards 6
2.2 Intended use 6
2.3 Working safely 6
2.4 Organizing measures 7
3 Technical data 8
3.1 General technical data 8
3.2 Dimensioned drawings 10
4 Mounting / Installation (all device models) 11
4.1 Mounting and alignment 11
4.2 Arrangement of adjacent transmission systems 12
4.3 Cascading (series connection) of several DDLS 200 data paths 14
4.4 Electrical connection 16
4.4.1 Electrical connection - devices with screwed cable glands and terminals 16
4.4.2 Electrical connection - devices with M12 connectors 19
5 PROFIBUS / RS 485 21
5.1 PROFIBUS connection - devices with screwed cable glands and terminals 21
5.2 PROFIBUS connection - devices with M12 connectors 22
5.3 Device configuration PROFIBUS 23
5.4 LED indicators PROFIBUS 24
6 INTERBUS 500kBit/s / RS 422 25
6.1 Electrical connection INTERBUS 500kBit/s 25
6.2 Device configuration INTERBUS 500kBit/s / RS 422 26
6.3 LED indicators INTERBUS 500kBit/s / RS 422 27
7 INTERBUS 2MBit/s FOC 28
7.1 FOC connection INTERBUS 2MBit/s 28
7.2 Device configuration INTERBUS 2MBit/s FOC 30
7.3 LED indicators INTERBUS 2MBit/s FOC 30

8 Data Highway + (DH+) / Remote I/O (RIO) 32
8.1 Electrical connection DH+ / RIO 32
8.2 Device configuration DH+ / RIO 33
8.3 LED indicators DH+ / RIO 34
9 DeviceNet / CANopen 35
9.1 Electrical connection DeviceNet/CANopen - screwed cable glands/terminals 35
9.1.1 Bus transceiver and device supplied via separate power connection 37
9.1.2 Bus transceiver supplied via bus cable, device supplied via separate power cable 37
9.1.3 Bus transceiver and device supplied via bus cable 38
9.2 DeviceNet/CANopen electrical connection - M12 connectors 39
9.3 Device configuration DeviceNet / CANopen 41
9.3.1 Baud rate conversion 41
9.3.2 Sorting (switch S4.1) 41
9.3.3 Bus length as a function of the baud rate 41
9.4 Wiring 42
9.4.1 Termination 43
9.5 DeviceNet/CANopen LED indicators 44
9.6 Interruption of the transmission path 45
9.7 Important information for system integrators 46
9.7.1 Schematic drawing of the inner construction 47
9.7.2 Time behavior 48
9.7.3 Synchronous messages 49
9.7.4 Other implementation notes 50
10 Ethernet 51
10.1 Ethernet connection - devices with screwed cable glands and terminals 51
10.2 Ethernet connection - devices with M12 connectors 52
10.3 Device configuration Ethernet 53
10.3.1 Autonegotiation (Nway) 53
10.3.2 Transmission rate conversion 53
10.3.3 Network expansion 53
10.4 Wiring 54
10.4.1 Assignment of the RJ45 and M12 Ethernet cables 55
10.4.2 Installing cable with RJ45 connector 56
10.5 LED indicators Ethernet 57
10.6 Important information for system integrators 57
10.6.1 Typical bus configuration 58
10.6.2 Time behavior 59

11 Commissioning / Operation (all device models) ... 61

11.1 Indicators and operational controls ... 61

11.2 Operating modes ... 62

11.3 Initial commissioning ... 63

11.3.1 Switch on device / function check ... 63

11.3.2 Fine alignment ... 63

11.4 Operation ... 64

12 Maintenance ... 65

12.1 Cleaning ... 65

13 Diagnostics and troubleshooting ... 66

13.1 Status indicator on the device ... 66

13.2 Diagnostic mode ... 66

13.3 Troubleshooting ... 67

14 Accessories ... 68

14.1 Accessories - Terminating resistors ... 68

14.2 Accessories - Connectors ... 68

14.3 Accessories - Ready-made cables for voltage supply ... 68

14.3.1 Contact assignment of PWR connection cable for voltage supply ... 68

14.3.2 Technical data of PWR connection cable for voltage supply ... 68

14.3.3 Order codes of PWR connection cable for voltage supply ... 68

14.4 Accessories - Ready-made cables for interface connection ... 69

14.4.1 General ... 69

14.4.2 Contact assignment for PROFIBUS connection cable KB PB… ... 69

14.4.3 Technical data for PROFIBUS connection cable KB PB… ... 70

14.4.4 Order codes for M12 PROFIBUS connection cables KB PB… ... 70

14.4.5 Contact assignment for M12 Ethernet connection cable KB ET… ... 71

14.4.6 Technical data for M12 Ethernet connection cable KB ET… ... 71

14.4.7 Order codes for M12 Ethernet connection cables KB ET… ... 72

1 General information

1.1 Explanation of symbols

The symbols used in this technical description are explained below.

⚠ ATTENTION!	
	This symbol precedes text messages which must strictly be observed. Failure to observe the provided instructions can lead to personal injury or damage to equipment.

⚠ ATTENTION LASER	
	This symbol warns of possible danger caused by hazardous laser radiation.

NOTE	
	This symbol indicates text passages containing important information.

1.2 Declaration of Conformity

The optical data transmission system DDLS 200 was developed and manufactured in accordance with the applicable European standards and directives.

The manufacturer of the product, Leuze electronic GmbH & Co. KG in D-73277 Owen, possesses a certified quality assurance system in accordance with ISO 9001.

The declaration of conformity can be requested from the manufacturer.

1.3 Short description

Where data has to be transmitted to and from moving objects, optical data transmission systems provide an ideal solution.

With the DDLS 200 series, Leuze electronic offers high-performance optical data transmission systems. The optical data transceivers are robust and free from wear.

A DDLS 200 data transmission system consists of a set of two transmission and reception units: e.g. DDLS 200/200.**1**-10 and DDLS 200/200.**2**-10.

Features of the DDLS 200

The fact that bus systems are found in nearly all areas of industry places high demands on data transmission systems. The DDLS 200 fulfills these requirements, particularly with regard to:

- Transmission safety
- Minimum transmission times (real-time capable)
- Deterministic transmission

The DDLS 200 data transmission system, which is available in several model variations, enables the contactless transmission of the following bus protocols:

- PROFIBUS FMS, DP, MPI, FMS - DP mixed operation, up to max. 1.5MBit/s, PROFISAFE
- INTERBUS 500kBit/s, RS 422 general, copper conductor
- INTERBUS 2MBit/s / 500kBit/s, fiber-optic cable
- Data Highway + (DH+) from Rockwell Automation (Allen Bradley)
- Remote I/O (RIO) from Rockwell Automation (Allen Bradley)
- DeviceNet
- CANopen
- Ethernet for all protocols based on TCP/IP or UDP

Other bus systems on request.

1.4 Operating principle

To prevent the devices from mutually interfering with one another during data transmission in duplex operation, they use two different frequency pairs. These are indicated by the type designation ….**1** and ….**2** as well as the label **frequency f_1** and **frequency f_2** on the control panel.

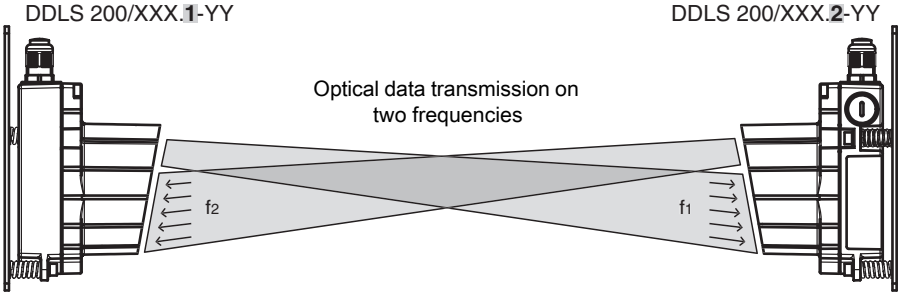

Figure 1.1:Operating principle

The received signal level is checked at both devices and can be read on a bar graph LED indicator. If the received signal level drops below a certain value, e.g. due to increased soiling of the optics, a warning output is activated.

All work on the device (mounting, connecting, aligning, indicators and operational controls) is performed comfortably on the front of the device.

2 Safety notices

2.1 Safety standards

The DDLS 200 optical data transmission system was developed, manufactured and tested in accordance with applicable safety standards. It corresponds to the state of the art. The DDLS 200 series is "UL LISTED" according to American and Canadian safety standards, and fulfills the requirements of Underwriter Laboratories Inc. (UL).

2.2 Intended use

The DDLS 200 optical data transmission system has been designed and developed for the optical transmission of data in the infrared range.

⚠ ATTENTION!	
⚠	The protection of personnel and the device cannot be guaranteed if the device is operated in a manner not complying with its intended use.

Areas of application

The DDLS 200 is suitable for the following areas of application:

- Automated high-bay warehouses
- Stationary data transmission between buildings
- Anywhere, where data transmission to and from stationary or moving objects (line-of-sight) over relatively long distances (up to 500 m) is required.
- Rotary transmission

2.3 Working safely

⚠ ATTENTION!	
⚠	Access to or changes on the device, except where expressly described in this operating manual, is not authorized.

2.4 Organizing measures

Documentation

All information provided in this technical description, especially sections "Safety notices" and "Commissioning," must be observed. Keep this technical description in a safe place. It should be available at all times.

Safety regulations

Observe the locally applicable legal regulations and the rules of the employer's liability insurance association.

Qualified personnel

Mounting, commissioning and maintenance of the device must only be carried out by qualified personnel.

Electrical work must be carried out by a certified electrician.

Repair

Repairs must only be carried out by the manufacturer or an authorized representative.

3 Technical data

3.1 General technical data

Electrical data	
Supply voltage Vin	18 … 30VDC
Current consumption without optics heating	Approx. 200 mA at 24 V DC (no load at switching output)
Current consumption with optics heating	Approx. 800 mA at 24 V DC (no load at switching output)
Optical data	
Operating range	0.2 … 30m (DDLS 200/30…) 0.2 … 80m (DDLS 200/80…) 0.2 … 120m (DDLS 200/120…) 0.2 … 200m (DDLS 200/200…) 0.2 … 300m (DDLS 200/300…) 0.2 … 500m (DDLS 200/500…)
Transmission diode	Infrared light, wavelength 880 nm
Opening angle	± 0.5° with respect to the optical axis for 120m … 500 m models, ± 1.0° with respect to the optical axis for 80 m models, ± 1.5° with respect to the optical axis for 30 m models
Ambient light	> 10000 Lux acc. to EN 60947-5-2:2008
LED risk group	Exempt group in acc. with EN 62471
Input/output	
Input	0 … 2VDC: transmitter/receiver deactivated 18 … 30VDC: transmitter/receiver activated
Output	0 … 2VDC: normal operation Vin … 2VDC: limited function reserve Output current max. 100 mA, short-circuit proof, protected against overvoltage, transients and overheating
Controls and indicators	
Membrane keyboard	Change of operating mode
Individual LEDs	Display of voltage supply, operating mode, data communication (dependent on type)
LED strip	Bar graph indicator of the received signal level
Mechanical data	
Housing	Diecast aluminum; optical inlet/outlet, glass
Weight	Approx. 1200 g
Degree of protection	IP 65 acc. to EN 60529:2000

Environmental conditions	
Operating temperature	-5°C … +50°C without optics heating -30°C … +50°C with optics heating (non-condensing)
Storage temperature	-30°C … +70°C
Air humidity	Max. 90% rel. humidity, non-condensing
Vibration	Acc. to EN 60068-2-6:1996
Noise	Acc. to EN 60068-2-64:2009
Shock	Acc. to EN 60068-2-27:1995 and EN 60068-2-29:1995
EMC*1	EN 61000-6-2:2006 and EN 61000-6-4:2007
UL LISTED	Acc. to UL 60950 and CSA C22.2 No. 60950

*1 Warning: This is a Class A product. In a domestic environment this product may cause radio interference, in which case the operator may be required to take adequate measures.

3.2 Dimensioned drawings

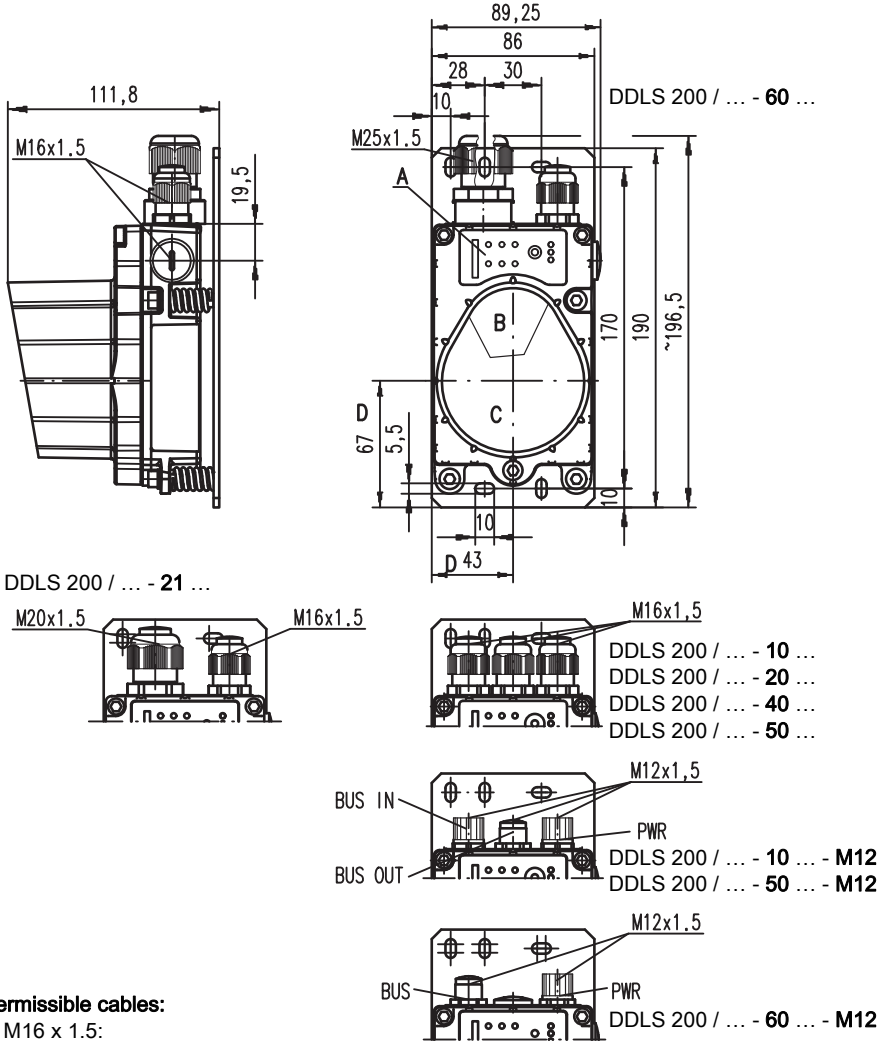

Permissible cables:

- M16 x 1.5:
  round cable Ø 5 … 10 mm
- M20 x 1.5:
  round cable Ø 7 … 12 mm
- M25 x 1.5:
  round cable Ø 4.5 … 9 mm

A Control panel
B Transmission optics
C Receiver optics
D Optical axis

Figure 3.1: Dimensioned drawing DDLS 200

4 Mounting / Installation (all device models)

4.1 Mounting and alignment

An optical data transmission system, consisting of 2 DDLS 200 devices, involves mounting each of the devices on mutually opposing, plane-parallel, flat and usually vertical walls with unobstructed view of the opposing DDLS 200.

Make sure that, at the minimum operating distance A_{min}, the optical axis of the devices is mounted within the opening angle (angle of radiation, ± A_{min} • 0.01). This also applies for rotary transmission.

NOTE	
	The opening angle (angle of radiation) of the optics is ± 0.5° (wide angle: ± 1.0° or 1.5°) to the optical axis! For all device models, the horizontal and vertical adjustment angles of the fine alignment with the adjustment screws is ± 6 ° each. The optical transmission path between the DDLS 200s should not be interrupted. If interruptions cannot be avoided, be sure to observe the notices in chapter 11.4. ↳ Therefore, pay close attention when selecting a suitable mounting location!

⚠ ATTENTION!	
	When laying out a mobile arrangement for a DDLS 200 transmission path, pay particular attention that the alignment of the devices relative to one another remains unchanged. The transmission can be interrupted by e.g. jolts, vibrations or inclination of the mobile device due to irregularities in the floor or path. **Ensure adequate track stability!** (See also "Diagnostic mode" on page 64)

Mount each device with four screws ∅ 5 mm using four of the five fastening holes in the mounting plate of the device (see chapter 3.2 "Dimensioned drawings").

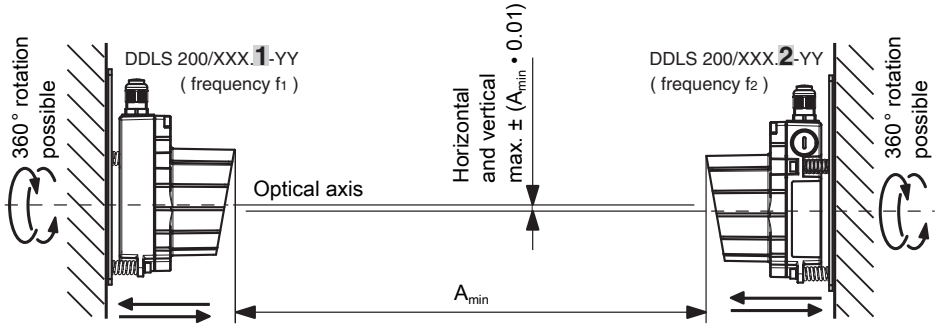

Figure 4.1: Mounting the devices

NOTE	
	The fine alignment of the transmission system is performed during commissioning (see chapter 11.3.2 "Fine alignment"). The position of the optical axis of the DDLS 200 can be found in chapter 3.2.

4.2 Arrangement of adjacent transmission systems

To prevent mutual interference of adjacent transmission systems, the following measures should be taken in addition to exact alignment:

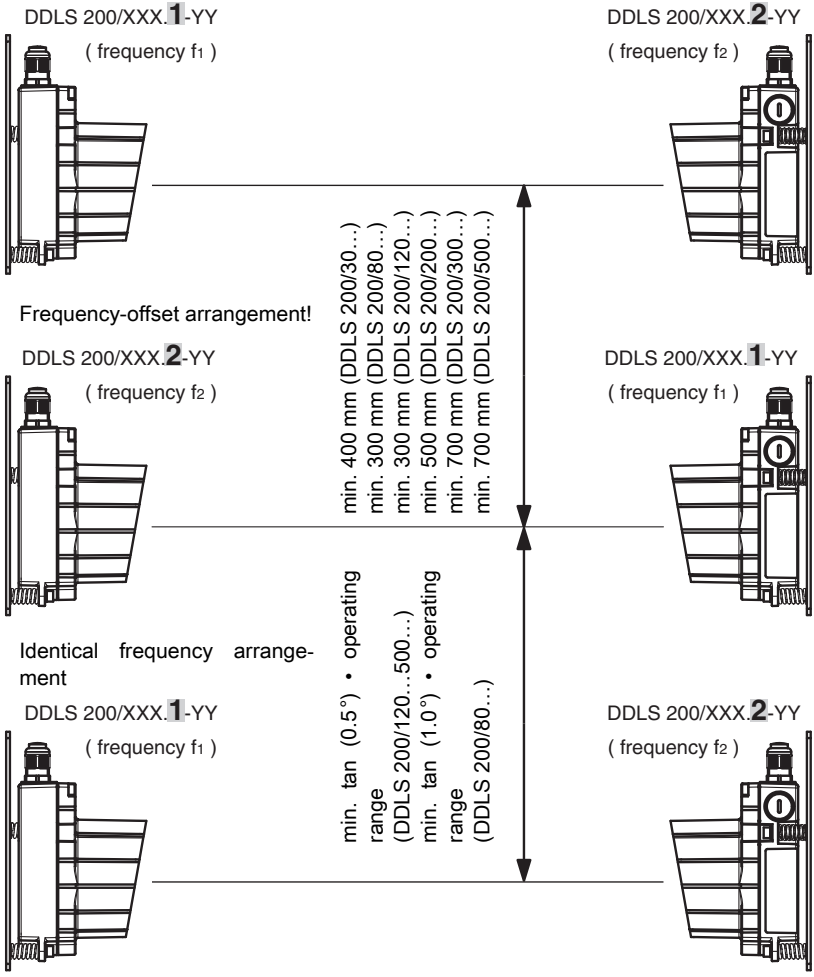

Figure 4.2: Arrangement of adjacent transmission systems

- In the case of a **frequency-offset arrangement**, the **distance between two parallel** transmission paths must not be less than
  - **400 mm** (DDLS 200/**30**…)
  - **300 mm** (DDLS 200/**80**…)
  - **300 mm** (DDLS 200/**120**…)
  - **500 mm** (DDLS 200/**200**…)
  - **700 mm** (DDLS 200/**300**…)
  - **700 mm** (DDLS 200/**500**…)

- In the case of **identical frequency arrangement**, the **distance between two parallel** transmission paths must be at least

  - **400mm + tan (1.5°) • operating range** (DDLS 200/**30**…)
  - **300mm + tan (1.0°) • operating range** (DDLS 200/**80**…)
  - **300mm + tan (0.5°) • operating range** (DDLS 200/**120**…)
  - **500mm + tan (0.5°) • operating range** (DDLS 200/**200**…)
  - **700mm + tan (0.5°) • operating range** (DDLS 200/**300**…)
  - **700mm + tan (0.5°) • operating range** (DDLS 200/**500**…)

4.3 Cascading (series connection) of several DDLS 200 data paths

If there are multiple optical data transmission paths between two communicating participants (TN), one speaks of cascading. There are further participants between the individual optical transmission paths in this case.

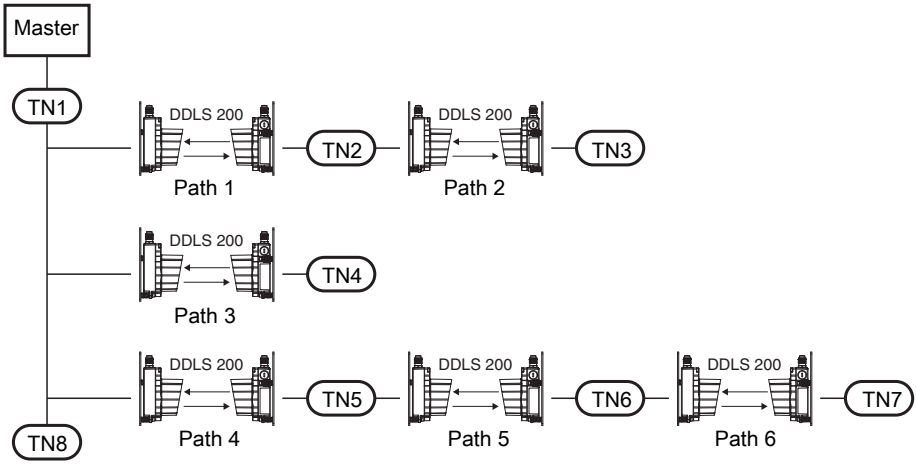

Figure 4.3: Cascading of several DDLS 200 systems

ATTENTION!	
	If, for example, participant 3 (TN3) of a multi-master bus system wants to exchange data directly with participant 7 (TN7), then five optical transmission paths are cascaded. This constellation can also occur if, e.g., a programming device that attempts to access participant 3 (TN3) is connected to participant 7 (TN7) for maintenance purposes or during commissioning of a master-slave-system.

The following table shows the maximum number of optical transmission paths for cascading.

Bus system	Max. number of optical transmission paths for cascading	Comment
PROFIBUS (with retiming)	3	Attention: PROFIBUS FMS is a multi-master bus
RS 485 (without retiming)	2	
INTERBUS 500 kBit (RS 422)	3	
INTERBUS FOC	3	Applies for 500 kBit and 2 MBit
RIO	3[1)]	
DH+	3 [1)]	Attention: DH+ may be a multi-master bus
DeviceNet	3	Depends significantly on the configuration of the master and on the requirements of the plant (time behavior).
CANopen	3	
Ethernet	3	

1) See remarks in the respective chapters of the individual bus systems about the switch position filtered/not filtered depending on the transmission rate.

NOTE	
	The individual delay time of the optical transmission path is specified in the chapters of the individual bus systems and depends on the type, switch position, and transmission rate.

4.4 Electrical connection

⚠ ATTENTION!	
⚠	Connection of the device and maintenance work while under voltage must only be carried out by a qualified electrician. If faults cannot be cleared, the device should be switched off and protected against accidental use. Before connecting the device, be sure that the supply voltage agrees with the value printed on the name plate. The DDLS 200 is designed in accordance with protection class III for supply with PELV (protective extra-low voltage with reliable disconnection). For UL applications: Use is permitted exclusively in Class 2 circuits according to NEC. Ensure the device is correctly earthed. Unimpaired operation is only guaranteed when the functional earth is connected properly.

Described in the following two sub-chapters is the electrical connection of the supply voltage, the input and the output.

The connection of the respective bus system is described in the following chapters.

4.4.1 Electrical connection - devices with screwed cable glands and terminals

To establish the electrical connections, you must first remove the red housing top with the optics. To do this, loosen the three housing Allen screws. The housing top is now only electrically connected to the base by means of a connector. Carefully pull the housing top straight forward without skewing.

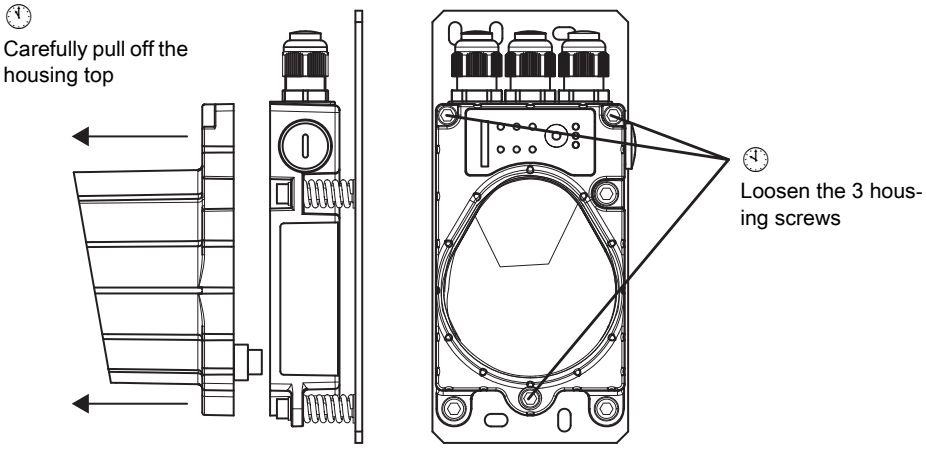

Figure 4.4: Removing the housing top

The connection compartment in the housing base with the screwed cable glands is now freely accessible.

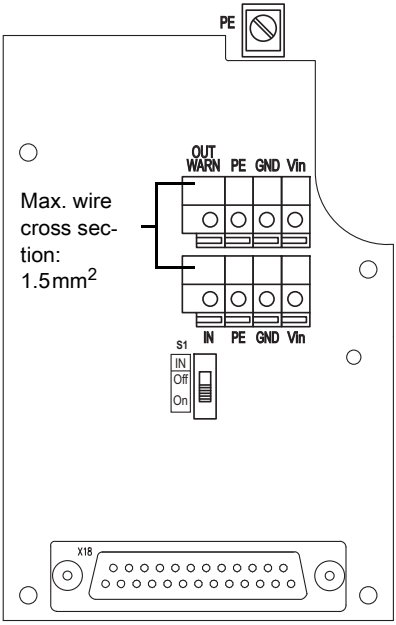

Terminal	Function
Vin	Positive supply voltage **+18 … +30 V DC**
GND	Negative supply voltage **0 V DC**
PE	**Functional earth**
OUT WARN	**Switching output**, activated if level drops below the warning level
IN	**Switching input** for transmitter/receiver switch-off: **0 … 2VDC**: transmitter/receiver switched off, no transmission **18 … 30VDC**: transmitter/receiver active, normal function
Switch	**Function**
S1	**On (Default):** The switching input is not analyzed. The transmitter/receiver unit is always in operation. **Off:** The switching input is analyzed. Depending on the input voltage, normal function or transmitter/receiver unit switched off.

Figure 4.5: Positions of the general, non-bus-specific terminals and switches

Supply voltage

Connect the supply voltage, including the functional earth, to the spring terminals labeled **Vin**, **GND** and **PE** (see figure 4.5).

NOTE	
	The connection terminals Vin, GND and PE are each available twice to simplify wiring through the supply voltage to other devices. The functional earth can alternatively be connected at the screw terminal in the housing base (max. wire cross section 2.5mm^2) If you would like to wire through the supply voltage, you should replace the dummy plugs on the right side of the housing base with an M16 x 1.5 screwed cable gland and guide the continuing supply voltage cable through this gland. The housing seal is, in this way, ensured (degree of protection IP 65). The housing top can be removed and replaced while under voltage.

Switching input

The DDLS 200 is equipped with a switching input **IN**, via which the transmitter/receiver unit can be switched off, i.e. no infrared light is transmitted and at the bus terminals the corresponding bus bias level is present / the bus driver is high impedance.

Input voltage:	0 … 2 V DC:	transmitter/receiver switched off, no transmission
(Relative to GND)	18 … 30VDC:	Transmitter/receiver active, normal function

For easier operation, the switching input can be activated/deactivated via switch S1:

Position S1:	**On**	the switching input is not analyzed. The transmitter/receiver unit is always in operation (internal preselection of the switching input with Vin).
	Off	the switching input is analyzed. Depending on the input voltage, normal function or transmitter/receiver unit switched off.

NOTE	
	When transmitter/receiver unit is switched off, the system behaves in the same way as in the event of a light beam interruption (see chapter 11.4 "Operation"). The switching input can be used, for example, during a corridor change to completely avoid interference effects from other sensors or the data transmission. Switch S1 is also present on the device models with M12 connectors.

Switching output

The DDLS 200 is equipped with a switching output **OUT WARN** which is activated if the received signal level in the receiver drops.

Output voltage:	0 … 2VDC:	operating range
(Relative to GND)	Vin - 2VDC:	Warning or shutoff range

The switching output is protected against: short-circuit, overcurrent, overvoltage, excess temperature and transients.

NOTE	
	The DDLS 200 is still completely functional when the received signal level drops to the warning signal level. Checking the alignment, and, if applicable, a readjustment and/or cleaning of the glass pane leads to a significant improvement of the received signal level.

4.4.2 Electrical connection - devices with M12 connectors

The electrical connection is easily performed using M12 connectors. Ready-made connection cables are available as accessories both for connecting supply voltage/switching input/switching output as well as for connecting the respective bus system (see chapter 14 "Accessories").

For all M12 device models, the supply voltage, the switching input and the switching output are connected via the right, A-coded connector **PWR IN** (see Figure 4.6).

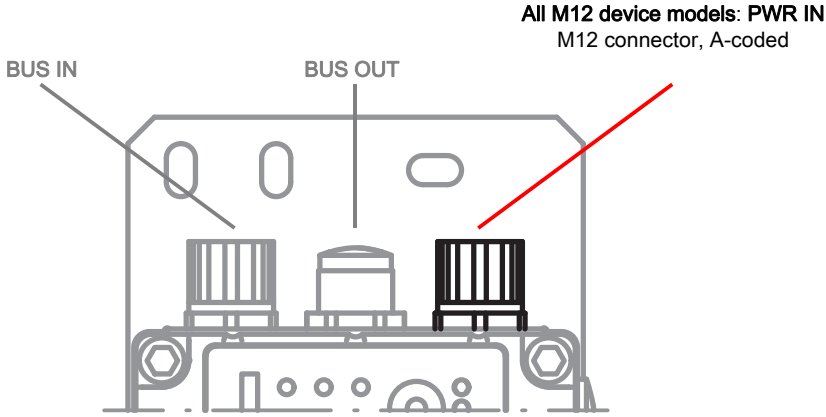

Figure 4.6: Position and designation of the M12 connections

PWR IN (5-pin M12 connector, A-coded)			
PWR IN OUT WARN 2 GND 3 1 Vin 4 FE IN M12 connector (A-coded)	Pin	Name	Comment
	1	Vin	Positive supply voltage **+18 … +30VDC**
	2	OUT WARN	**Switching output**, activated if level drops below the warning level
	3	GND	Negative supply voltage **0 V DC**
	4	IN	**Switching input** for transmitter/receiver switch-off: **0 … 2VDC**: Transmitter/receiver switched off, no transmission **18 … 30VDC**: transmitter/receiver active, normal function
	5	FE	Functional earth
	Thread	FE	Functional earth (housing)

Figure 4.7: Assignment M12 connector PWR IN

Supply voltage

Connect the supply voltage including functional earth according to the pin assignments (see figure 4.7).

Switching input

The DDLS 200 is equipped with a switching input **IN** (pin 1), via which the transmitter/receiver unit can be switched off, i.e. no infrared light is transmitted and at the bus terminals the corresponding bus bias level is present / the bus driver is high impedance.

The upper part of the housing only needs to be removed if the switching input is to be activated/deactivated via switch S1 (for further information, see Figure 4.4, Figure 4.5 and "Switching input" on page 18).

Input voltage:	0 … 2 V DC:	transmitter/receiver switched off, no transmission
(Relative to GND)	18 … 30VDC:	Transmitter/receiver active, normal function

For easier operation, the switching input can be activated/deactivated via switch **S1** (see Chapter 4.4.1, Figure 4.4 and Figure 4.5):

Position S1:	**On**	the switching input is not analyzed. The transmitter/receiver unit is always in operation (internal preselection of the switching input with Vin).
	Off	the switching input is analyzed. Depending on the input voltage, normal function or transmitter/receiver unit switched off.

NOTE	
	When transmitter/receiver unit is switched off, the system behaves in the same way as in the event of a light beam interruption (see chapter 11.4 "Operation"). The switching input can be used, for example, during a corridor change to completely avoid interference effects from other sensors or the data transmission. Switch S1 is also present on the device models with M12 connectors.

Switching output

The DDLS 200 is equipped with a switching output **OUT WARN** which is activated if the received signal level in the receiver drops.

Output voltage:	0 … 2VDC:	operating range
(Relative to GND)	Vin - 2VDC:	Warning or shutoff range

The switching output is protected against: short-circuit, overcurrent, overvoltage, excess temperature and transients.

NOTE	
	The DDLS 200 is still completely functional when the received signal level drops to the warning signal level. Checking the alignment, and, if applicable, a readjustment and/or cleaning of the glass pane leads to a significant improvement of the received signal level.

5 PROFIBUS / RS 485

The PROFIBUS model of the DDLS 200 has the following features:

- Operating ranges 30m, 80m, 120m, 200m, 300m, 500m
- Electrically isolated interface
- The DDLS 200 does not occupy a PROFIBUS address
- Integrated repeater function (signal processing), can be switched off
- Protocol-independent data transmission, i.e. transmission of the FMS, DP, MPI, FMS/DP mixed operation protocols, PROFISAFE
- 2 connection variants: clamp connection with screwed cable glands or M12 connectors
- Connectable bus terminator (termination), or ext. terminator plug on the M12 model
- 6 baud rates configurable (see Chapter 5.3)
- Optional M12 connector set for conversion available as accessory
- Cascading of several DDLS 200 is possible (see Chapter 4.3)

5.1 PROFIBUS connection - devices with screwed cable glands and terminals

The electrical connection to the PROFIBUS is made at the terminals **A**, **B**, and **COM**. The terminals **A'**, **B'** and **COM** are provided for wiring through the bus.

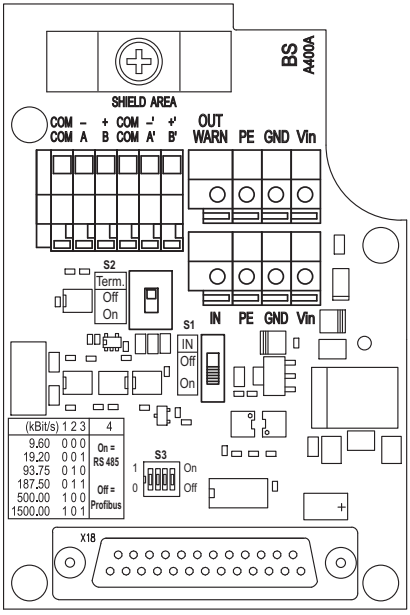

PROFIBUS - terminals and switches

Terminal	Function
A , –	(N) PROFIBUS or (–) RS 485
B, +	(P) PROFIBUS or (+) RS 485
COM	Potential equalization
A', –'	(N) PROFIBUS or (–) RS 485 of the continuing bus
B', +'	(P) PROFIBUS or (+) RS 485 of the continuing bus
Switch	**Function**
S2	Termination On/Off
S3-1 … S3-3	Setting the baud rate of the PROFIBUS segment
S3-4	Changeover PROFIBUS (Off) / RS 485 (On)

Figure 5.1: Connection board of the PROFIBUS model with terminals and screwed cable glands

⚠ ATTENTION!	
⚠	Please be sure to observe the installation requirements (bus cables, cable lengths, shielding, etc.) defined in the PROFIBUS standard EN 50170 (Vol. 2)

5.2 PROFIBUS connection - devices with M12 connectors

The electrical connection of the PROFIBUS is easily performed using M12 connectors. Ready-made connection cables are available as accessories both for connecting the incoming bus as well as for connecting the continuing bus (see chapter 14 "Accessories").

For all M12 device models, the connection is made via the two left, B-coded connectors **BUS IN** and **BUS OUT** (see Figure 5.2).

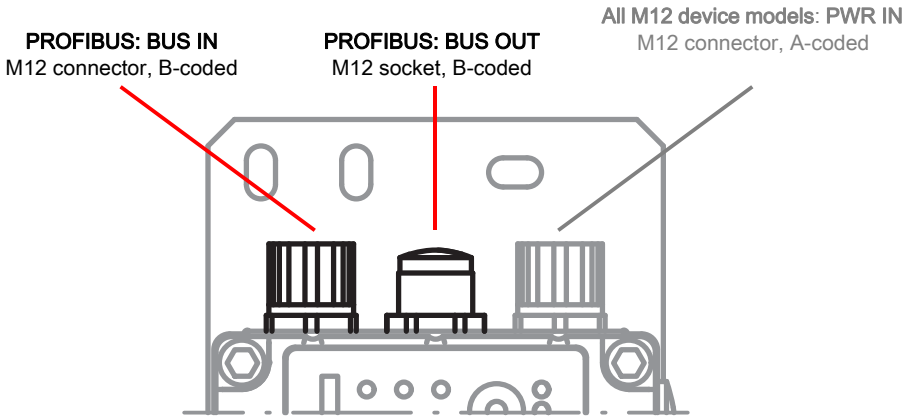

Figure 5.2: Location and designation of the M12 PROFIBUS connections

BUS IN (5-pin M12 connector, B-coded)			
BUS IN	**Pin**	**Name**	**Comment**
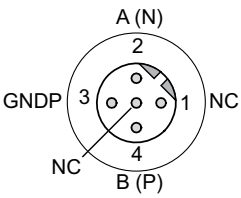	**1**	**NC**	Not assigned
	2	**A (N)**	Receive/transmit data A-line (N)
	3	**GNDP**	Data reference potential
	4	**B (P)**	Receive/transmit data B-line (P)
	5	**NC**	Not assigned
M12 connector (B-coded)	**Thread**	**FE**	Functional earth (housing)

Figure 5.3: Assignment M12 connector BUS IN

BUS OUT (5-pin M12 socket, B-coded)			
BUS OUT A (N) 2 VCC 1 3 GNDP 4 NC B (P) M12 socket (B-coded)	Pin	Name	Comment
	1	VCC	5VDC for bus termination
	2	A (N)	Receive/transmit data A-line (N)
	3	GNDP	Data reference potential
	4	B (P)	Receive/transmit data B-line (P)
	5	NC	Not assigned
	Thread	FE	Functional earth (housing)

Figure 5.4: Assignment M12 connector BUS OUT

Termination for devices with M12 connectors

NOTE	
	If the PROFIBUS network begins or ends at the DDLS 200 (no continuing bus), the BUS OUT connection must be terminated with the TS 02-4-SA terminator plug, which is available as an optional accessory (see chapter 14.1 on page 66). In this case, please also order the TS 02-4-SA terminator plug.

5.3 Device configuration PROFIBUS

Termination for devices with screwed cable glands and terminals

The PROFIBUS can be terminated via the switch **S2** in the DDLS 200. If the **termination is active (S2 = On)**, internal bus resistors are connected as per the PROFIBUS standard and the PROFIBUS is not wired through at terminals **A'** and **B'**.

Activate the termination when the PROFIBUS segment begins or ends at the DDLS 200. The default setting is **termination inactive (S2 = Off)**.

Adjustment of the transmission rate

You must set the transmission rate of your PROFIBUS segment using the three DIP switches S3-1 through S3-3. Possible transmission rates are:

- 9.6 kBit/s
- 19.2 kBit/s
- 93.75 kBit/s
- 187.5 kBit/s [1)]
- 500 kBit/s [1)]
- 1500 kBit/s [1)]

Set the transmission rate in accordance with the table printed on the connection board (see figure 5.1). The default settings are:

- 9.6kBit/s for DDLS 200 PROFIBUS device models with clamp connection
- 1500kBit/s for DDLS 200 PROFIBUS device models with M12 connection

1) Not for 500 m operating range!

Changeover PROFIBUS / RS 485 (default: 'Off' = PROFIBUS)

The DDLS 200 has, as a standard function, a repeater function (signal processing) and is, with regard to the PROFIBUS, to be viewed as a repeater.

NOTE	
	Please observe the guidelines specified in EN 50170 (Vol. 2) regarding the use of repeaters. The delay time of a data transmission path is maximum 1.5 µs + 1 TBit. It is also possible to transmit other RS 485 protocols. For PROFIBUS applications, S3-4 should be set to 'Off' ('0'). DIP-switch S3-4 can be used to switch off the repeater function for non-PROFIBUS applications (S3-4 = 'On'). In this case, no signal regeneration takes place; the RS 485 protocol must, however, still provide certain features **Please contact the manufacturer if you would like to use the DDLS 200 for general RS 485 protocols.**

5.4 LED indicators PROFIBUS

In addition to the indicators and operational controls present in all device models (bar graph, buttons, LEDs AUT, MAN, ADJ; see chapter 11.1 "Indicators and operational controls"), the PROFIBUS model also has the following indicators:

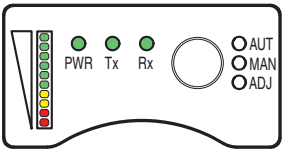

LED **PWR**:	green	=	operation indicator
	green flashing	=	transmitter / receiver unit switched off via switching input **IN** or hardware error
	off	=	no operating voltage
LED **Tx**:	green	=	data is being transmitted to the bus
	green flashing	=	with baud rates set to very low values, the LEDs **Tx** and **Rx** flicker. At very high baud rates (> 50 kBit/s), flashing LEDs **Tx** and **Rx** indicate faulty bus communication.
	off	=	no data on the transmission line
LED **Rx**:	green	=	data is being received by the bus
	green flashing	=	with baud rates set to very low values, the LEDs **Tx** and **Rx** flicker. At very high baud rates (> 50 kBit/s), flashing LEDs **Tx** and **Rx** indicate faulty bus communication.
	off	=	no data on the receiving line

Figure 5.5: Indicators and operational controls of the PROFIBUS model

6 INTERBUS 500kBit/s / RS 422

The INTERBUS model of the DDLS 200 has the following features:

- Operating ranges 30m, 120m, 200m, 300m, for INTERBUS
- Electrically isolated interface
- The DDLS 200 is **not an** INTERBUS participant
- Protocol-independent data transmission, transparent compared to other RS 422 protocols
- 500kBit/s fixed transmission rate with INTERBUS,
  with RS 422 generally lower transmission rates as well
- Operating range 500m for RS 422 up to 100kBit/s
- Cascading of several DDLS 200 is possible (see Chapter 4.3)

6.1 Electrical connection INTERBUS 500kBit/s

The electrical connection to the INTERBUS is made at terminals **DO… / DI…** and **COM** as shown in Figure 6.1.

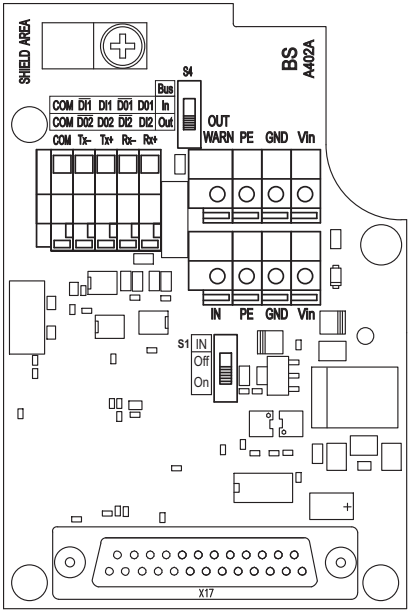

INTERBUS - terminals and switches

Terminal	Function
DO1 / DI2, Rx+	Receiving line +
$\overline{\text{DO1}}$ / $\overline{\text{DI2}}$, Rx–	Receiving line –
DI1 / DO2, Tx+	Transmission line +
$\overline{\text{DI1}}$ / $\overline{\text{DO2}}$, Tx–	Transmission line –
COM	Potential equalization
Switch	**Function**
S4	Position **In**: incoming bus with shielding connection via RC element Position **Out (default)**: outgoing bus with direct shielding connection

Figure 6.1: Connection board of the INTERBUS model

⚠ ATTENTION!	
⚠	Please be sure to observe the installation requirements (bus cables, cable lengths, shielding, etc.) defined in the INTERBUS standard EN 50254

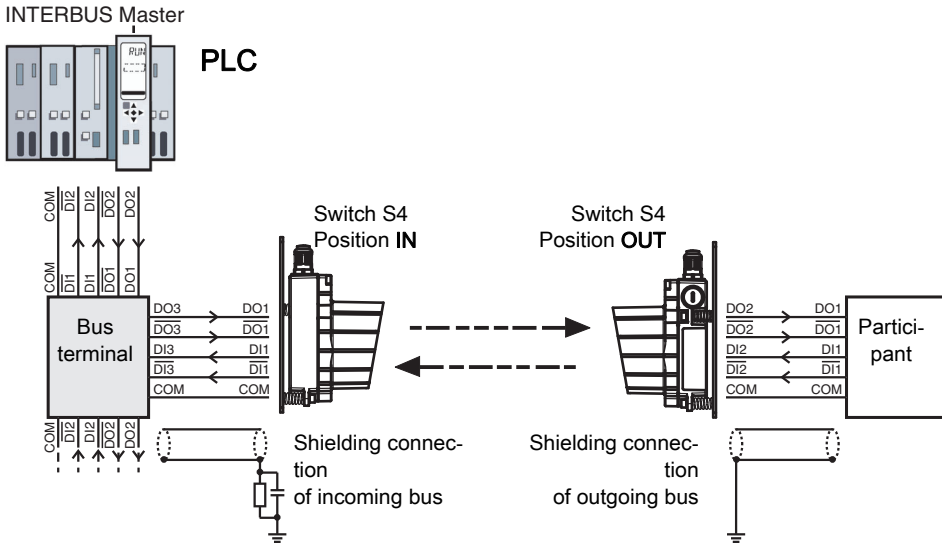

Figure 6.2: Connection of the DDLS 200 to the INTERBUS (copper conductor)

6.2 Device configuration INTERBUS 500kBit/s / RS 422

Device configuration INTERBUS

Changeover incoming/outgoing bus and shielding connection (default: 'Out')

Switch **S4** must be used to specify in the DDLS 200 whether the connected bus cable is for the incoming bus (In) or outgoing bus (Out):

Switch S4	Position **In**:	incoming bus, the shielding connection (clamp) is connected via an RC element to PE.
	Position **Out**:	outgoing bus, the shielding connection (clamp) is connected directly to PE.

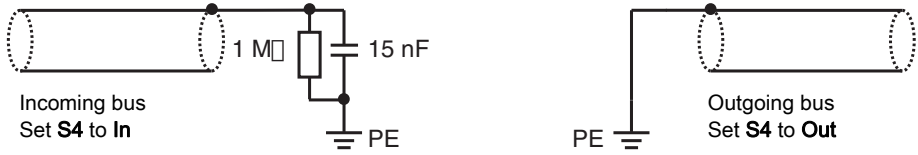

Figure 6.3: Shielding connection for incoming/outgoing bus

Device configuration RS 422

General RS 422 protocols can be transmitted with the DDLS 200. No baud rate setting is necessary (max. 500kBit/s). The shielding connection can be set via switch S4 as with the INTERBUS.

NOTE	
	The delay time of a light path is approx. 1.5 µs (depending on the distance).

6.3 LED indicators INTERBUS 500kBit/s / RS 422

In addition to the indicators and operational controls present in all device models (bar graph, buttons, LEDs AUT, MAN, ADJ; see chapter 11.1 "Indicators and operational controls"), the INTERBUS model also has the following indicators:

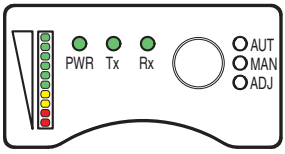

LED **PWR**:	green	=	operation indicator
	green flashing	=	transmitter / receiver unit switched off via switching input **IN** or hardware error
	off	=	no operating voltage
LED **Tx**:	green	=	data is being transmitted to the bus
	green flashing	=	with baud rates set to very low values, the LEDs **Tx** and **Rx** flicker. At very high baud rates (> 50kBit/s), flashing LEDs **Tx** and **Rx** indicate faulty bus communication.
	off	=	no data on the transmission line
LED **Rx**:	green	=	data is being received by the bus
	green flashing	=	with baud rates set to very low values, the LEDs **Tx** and **Rx** flicker. At very high baud rates (> 50kBit/s), flashing LEDs **Tx** and **Rx** indicate faulty bus communication.
	off	=	no data on the receiving line

Figure 6.4: Indicators and operational controls of the INTERBUS model

7 INTERBUS 2MBit/s FOC

The INTERBUS fiber-optic cable model of the DDLS 200 has the following features:

- Operating ranges 200m, 300m
- Transmission immune to interference through the use of fiber optic cables
- Bus connection by means of polymer-fiber cable with FSMA connector
- The DDLS 200 is an INTERBUS participant (Ident code: 0x0C = 12_{dec}), but does not occupy data in the bus
- Adjustable transmission rate 500 kBit/s or 2 MBit/s
- Cascading of several DDLS 200 is possible (see Chapter 4.3)

7.1 FOC connection INTERBUS 2MBit/s

The connection to the INTERBUS is by means of the FSMA connectors **H1** and **H2** as shown in Figure 7.1.

Recommended fiber-optic cables:

- PSM-LWL-KDHEAVY… (Phoenix Contact)
- PSM-LWL-RUGGED… (Phoenix Contact)

NOTE	
	The maximum length of the fiber-optic cables is 50m.

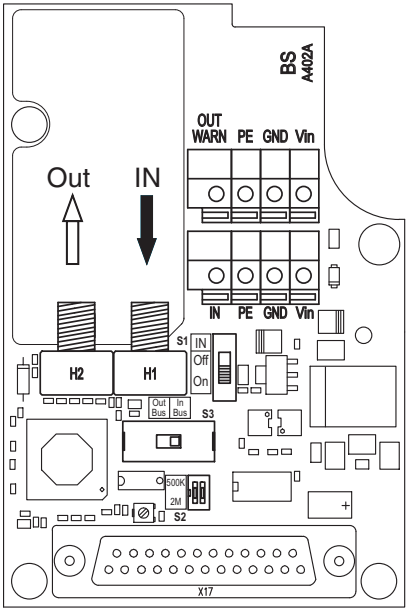

INTERBUS - terminals and switches

FOC socket	Function
H1	Receiver fiber-optic cable
H2	Transmitter fiber-optic cable
Switch	**Function**
S2	Position **500k**: INTERBUS FOC transmission rate 500 kBit/s Position **2M (default)**: INTERBUS FOC transmission rate 2 MBit/s
S3	Position **In Bus (default)**: incoming bus fiber-optic cable Position **Out Bus**: outgoing bus fiber-optic cable

Figure 7.1: Connection board of the INTERBUS model

ATTENTION!

Please be sure to observe the installation requirements defined in the INTERBUS standard EN 50254 and follow the handling and installation specifications for fiber-optic cables as specified by the manufacturer.

For the **FOC guides**, use only the **large screwed cable gland** M20 x 1.5. *Do not bend beyond the specified minimum bending radius given for the FOC type used! Observe the maximum FOC length!*

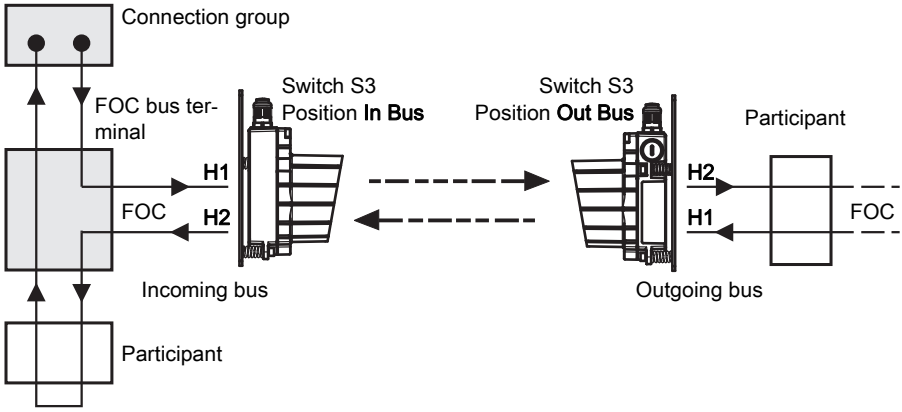

Figure 7.2: Connection of the DDLS 200 to the INTERBUS (fiber-optic cable)

7.2 Device configuration INTERBUS 2MBit/s FOC

Changeover transmission rate (default: '2M')

In the DDLS 200, switch **S2** must be used to specify in the transmission rate of the FOC INTERBUS:

Switch S2	Position **500k**:	transmission rate 500 kBit/s.
	Position **2M (default)**:	transmission rate 2 MBit/s.

Changeover incoming/outgoing bus (default: 'In Bus')

Switch **S3** must be used to specify in the DDLS 200 whether the connected FOC is for the incoming bus (In Bus) or outgoing bus (Out Bus):

Switch S3	Position **In Bus (default)**:	incoming bus FOC, outgoing bus optical data transmission.
	Position **Out Bus**:	incoming bus optical data transmission, outgoing bus FOC.

NOTE	
i	The delay time of a light path is approx. 2.5 µs.

7.3 LED indicators INTERBUS 2MBit/s FOC

In addition to the indicators and operational controls present in all device models (bar graph, buttons, LEDs AUT, MAN, ADJ; see chapter 11.1 "Indicators and operational controls"), the INTERBUS model also has the following indicators:

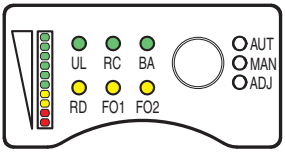

UL = logic voltage **UL**

RC = **R**emote Bus **C**heck

BA = **B**us **A**ctivity

RD = **R**emote Bus **D**isable

FO1 = **F**iber **O**ptics **1**

FO2 = **F**iber **O**ptics **2**

LED **UL**:	green	=	operation indicator (Power on)
	green flashing	=	transmitter / receiver unit switched off via switching input **IN** or hardware error
	off	=	no operating voltage
LED **RC**:	green	=	INTERBUS connection OK
	off	=	INTERBUS in reset mode or connection not OK
LED **BA**:	green	=	display of bus activity
	off	=	no bus activity
LED **RD**:	yellow	=	continuing bus switched off
	off	=	continuing bus detected
LED **FO1**:	yellow	=	initialization faulty or MAU warning (Master in RUN state)
	off	=	initialization OK, no MAU warning (Master in READY state)
LED **FO2**:	yellow	=	initialization faulty or MAU warning (Master in RUN state)
	off	=	initialization OK, no MAU warning (Master in READY state)

Figure 7.3: Indicators and operational controls of the INTERBUS model

NOTE	
	The DDLS 200 is an INTERBUS participant (Ident code: 0x0C = 12dec). A current CMD participant description can be downloaded from http://www.leuze.de. If the value falls below the warning level (bar graph), a peripheral error message is transmitted via the INTERBUS. When this error message is transmitted, the usual cause is soiling of the glass optics (see chapter 12.1 "Cleaning"), an incorrectly adjusted data transmission path, or an interrupted light path. You can also use the diagnostic options available via the INTERBUS.

8 Data Highway + (DH+) / Remote I/O (RIO)

The DH+/RIO model of the DDLS 200 has the following features:

- Operating ranges 120 m, 200 m, 300 m
- Electrically isolated interface
- Direct connection to the Data Highway + and Remote I/O bus from Rockwell Automation (Allen Bradley)
- Adjustable transmission rate 57.6 / 115.2 or 230.4 kBit/s
- Cascading of several DDLS 200 is possible (see Chapter 4.3)

8.1 Electrical connection DH+ / RIO

The electrical connection to the DH+ / RIO bus is made in accordance with the table on the connection board at the terminals **1**, **2** and **3**. These terminals are each provided twice for wiring through the bus.

Cable to be used: Bluehouse Twinax (Belden 9463 or Allen Bradley 1770-CD)

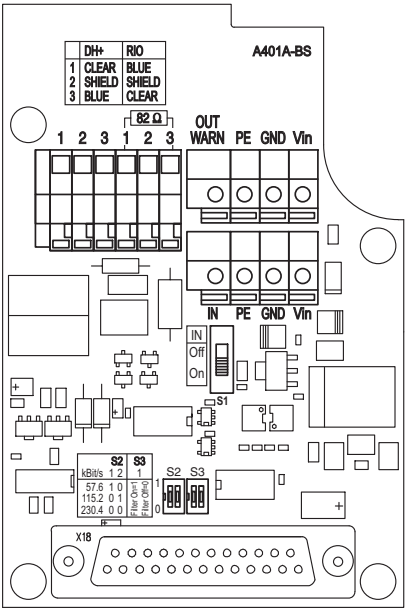

Figure 8.1: Connection board of the DH+ / RIO model

DH+/RIO - terminals and switches

Terminal	Assignment DH+	Assignment RIO
1	CLEAR	BLUE
2	SHIELD	SHIELD
3	BLUE	CLEAR

Switch	Function
S2-1, S2-2	Setting the transmission rate (see table on the connection board), **default**: 230.4 kBit/s
S3-1	Filter for interference-peak rejection. Position **On** (1): filter switched on (**default**) Position **Off** (0): filter switched off
S3-2	Not assigned

ATTENTION!

The right DH+ / RIO connections 1 and 3 are equipped standard with an 82 W resistor for terminating the bus. Remove this terminating resistor when the bus cable in the DDLS 200 is to be wired through to another network device, i.e. the DDLS 200 is not the last device on the bus cable. The use of the DDLS 200 is limited to bus systems with 82 W termination.

8.2 Device configuration DH+ / RIO

Cascading of multiple DDLS 200 transmission paths (filter, **default: 'On' = on**)

If multiple DDLS 200 transmission paths are to be cascaded within a bus segment (see figure 8.2), the filter for interference-peak suppression (switch **S3-1**) must be adjusted appropriately for the selected transmission rate. Observe also the notices in Chapter 4.3.

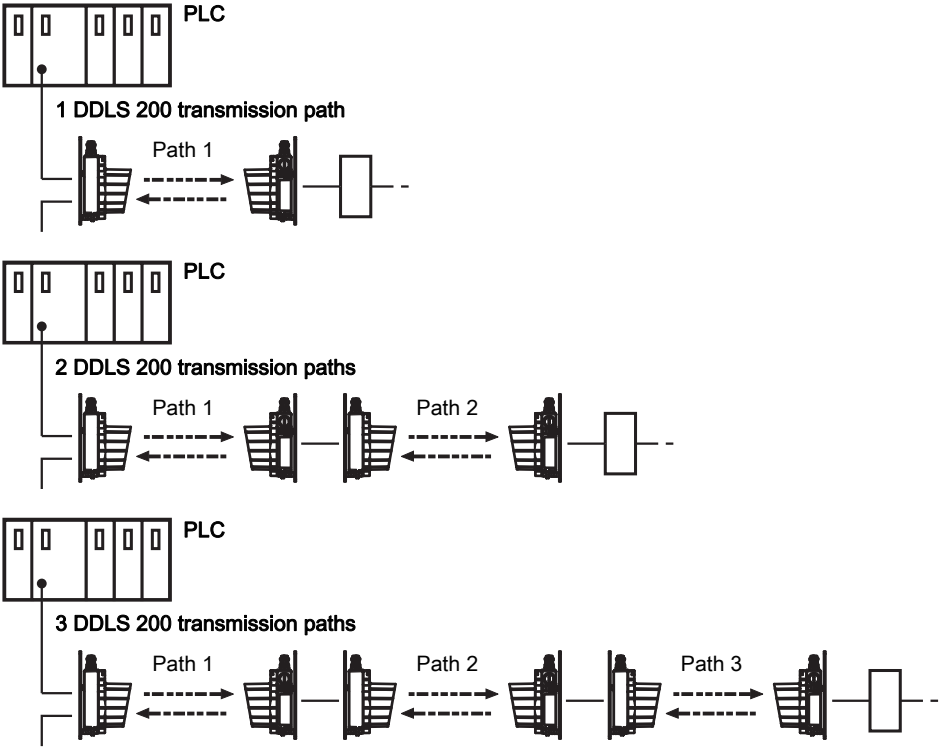

Figure 8.2: Cascading multiple optical transmission paths with DH+ / RIO

In accordance with the following table, set the filter for each DDLS 200 transmission path at both devices for the given path using switch S3-1.

Baud rate	Position of S3-1 for		
	1 path	2 paths	3 paths
57.6 kBit/s	**Path 1**: **On** (1)	**Path 1**: **On** (1) **Path 2**: **Off** (0)	**Path 1**: **On** (1) **Path 2**: **Off** (0) **Path 3**: **Off** (0)
115.2 kBit/s and 230.4 kBit/s	**Path 1**: **On** (1)	**Path 1**: **On** (1) **Path 2**: **On** (1)	**Path 1**: **On** (1) **Path 2**: **On** (1) **Path 3**: **On** (1)

Table 8.1: Filter settings when cascading multiple DDLS 200 transmission paths

NOTE	
The delay time of a light path is:	**S3-1 On (1) = approx. 1.5 µs + 1.5TBit** **S3-1 Off (0) = approx. 1.5 µs**

8.3 LED indicators DH+ / RIO

In addition to the indicators and operational controls present in all device models (bar graph, buttons, LEDs AUT, MAN, ADJ; see chapter 11.1 "Indicators and operational controls"), the DH+/RIO model also has the following indicators:

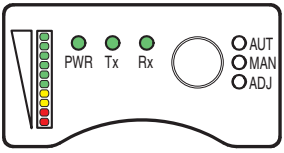

LED **PWR**:	green	=	operation indicator
	green flashing	=	transmitter / receiver unit switched off via switching input **IN** or hardware error
	off	=	no operating voltage
LED **Tx**:	green	=	data is being transmitted to the bus
	green flashing	=	with baud rates set to very low values, the LEDs **Tx** and **Rx** flicker. At very high baud rates (> 50kBit/s), flashing LEDs **Tx** and **Rx** indicate faulty bus communication.
	off	=	no data on the transmission line
LED **Rx**:	green	=	data is being received by the bus
	green flashing	=	with baud rates set to very low values, the LEDs **Tx** and **Rx** flicker. At very high baud rates (> 50kBit/s), flashing LEDs **Tx** and **Rx** indicate faulty bus communication.
	off	=	no data on the receiving line

Figure 8.3: Indicators and operational controls of the DH+/RIO model

NOTE	
	You can also use the diagnostic options available via the bus system.

9 DeviceNet / CANopen

The DeviceNet/CANopen model of the DDLS 200 has the following features:

- Operating ranges 120 m, 200 m, 300 m
- The DDLS200/___.-50 can transmit both DeviceNet as well as CANopen protocols
- Electrically isolated interface
- The DDLS 200 does not occupy an address
- CAN controller acc. to 2.0B standard
- Can simultaneously process 11-bit and 29-bit identifiers
- 8 adjustable baud rates (10, 20, 50, 125, 250, 500, 800 kBit/s, 1 MBit/s)
- Baud rate conversion possible
- With DDLS 200 it is possible to extend the overall size of a CAN network
- M12 connector set available as accessory
- Various supply options are possible for the device
- Cascading of several DDLS 200 is possible (see Chapter 4.3)

9.1 Electrical connection DeviceNet/CANopen - screwed cable glands/terminals

The electrical connection to DeviceNet / CANopen is made at terminals V-, CAN_L, DRAIN, CAN_H, V+. The terminals are each available twice for wiring through the bus.

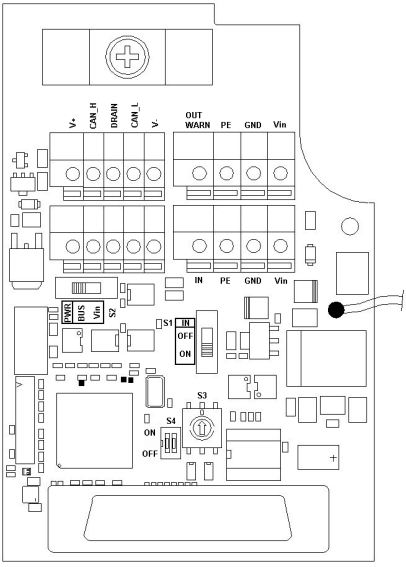

No.	Terminal	Cable color	Function
1	V-	Black	Neg. supply (CAN ground reference)
2	CAN_L	Blue	Bus signal (LOW)
3	DRAIN	Transparent	Shield
4	CAN_H	White	Bus signal (HIGH)
5	V+	Red	Pos. supply
Switch		**Position**	**Function**
S2		BUS	Bus transceivers are supplied via the bus cable (V- and V+ lines)
		Vin **default**	Bus transceivers are supplied via internal DC/DC converters
S3		0 **default**	125kBit baud rate CANopen/ DeviceNet
		1	250kBit baud rate CANopen/ DeviceNet
		2	500kBit baud rate CANopen/ DeviceNet
		3	10kBit baud rate CANopen
		4	20kBit baud rate CANopen
		5	50kBit baud rate CANopen
		6	800kBit baud rate CANopen
		7	1000kBit baud rate CANopen
		8	Reserved
		9	Reserved
S4.1		ON	Sorting memory is active
		OFF **default**	Sorting memory is deactivated (FIFO)

Figure 9.1: Connection board of the DeviceNet / CANopen model

ATTENTION!

The maximum permissible current which may pass over terminals V+ / V- is 3 A; the maximum permissible voltage is 25 V (11 … 25 V)!

9.1.1 Bus transceiver and device supplied via separate power connection

- Switch S2 = Vin.
- Bus electrically isolated (isolated node).
- CAN_GND must be connected to V-.

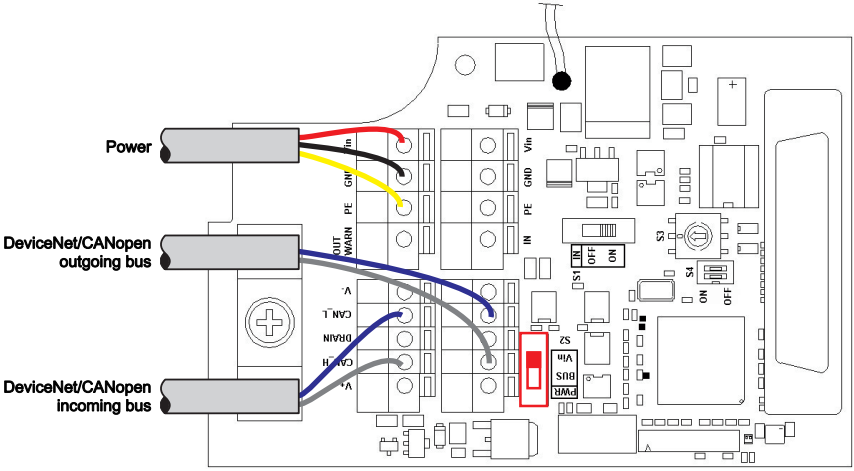

Figure 9.2: Bus transceiver and device supplied via separate power connection

9.1.2 Bus transceiver supplied via bus cable, device supplied via separate power cable

- Switch S2 = BUS.
- Bus electrically isolated (isolated node).

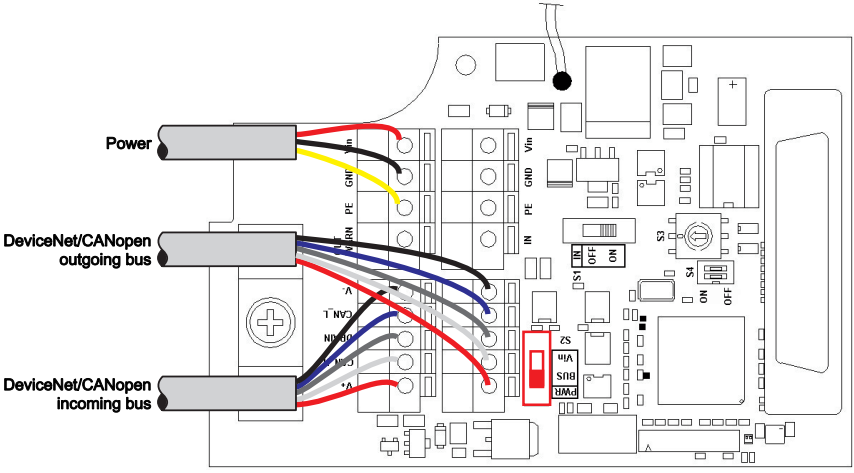

Figure 9.3: Bus transceiver supplied via bus cable, device supplied via separate power cable

9.1.3 Bus transceiver and device supplied via bus cable

- Switch S2 = BUS.
- Bus **not** electrically isolated (non-isolated node).
- Current consumption see chapter 3 "Technical data".

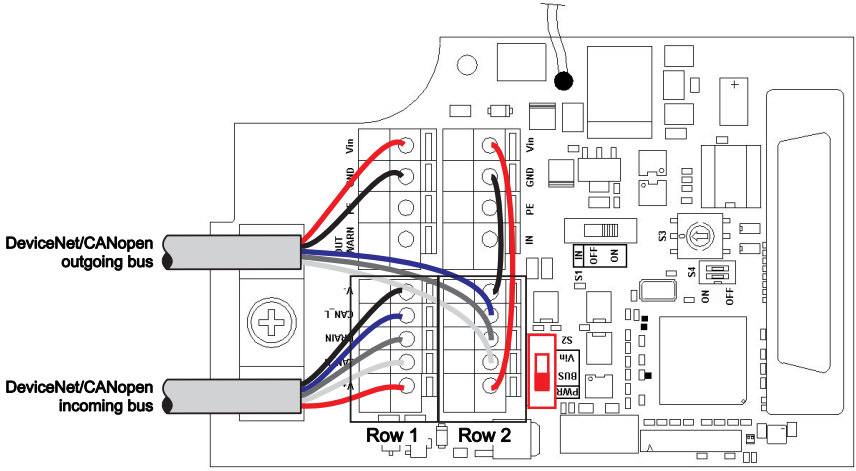

Figure 9.4: Bus transceiver and device supplied via bus cable

Incoming bus cable		Outgoing bus cable	
Cable	**Terminal**	**Cable**	**Terminal**
V- (black)	V- (row 1)	V- (black)	GND
CAN_L (blue)	CAN_L (row 1)	CAN_L (blue)	CAN_L (row 2)
DRAIN (transparent)	DRAIN (row 1)	DRAIN (transparent)	DRAIN (row 2)
CAN_H (white)	CAN_H (row 1)	CAN_H (white)	CAN_H (row 2)
V+ (red)	V+ (row 1)	V+ (red)	Vin
Bridge between Vin and V+ (row 2)			
Bridge between GND and V- (row 2)			

Table 9.1: Connection table

NOTE

In order for this interface connection to be conformant with the DeviceNet Ground concept, the load on the switching output and/or the source at the switching input must be potential-free.

If the complete device is operated using the supply in the bus cable, it must be ensured that the voltage is at least 18 V.

The total current of the device is the device current plus the current drawn at the switching output.

9.2 DeviceNet/CANopen electrical connection - M12 connectors

The electrical connection of DeviceNet/CANopen is performed using M12 connectors.

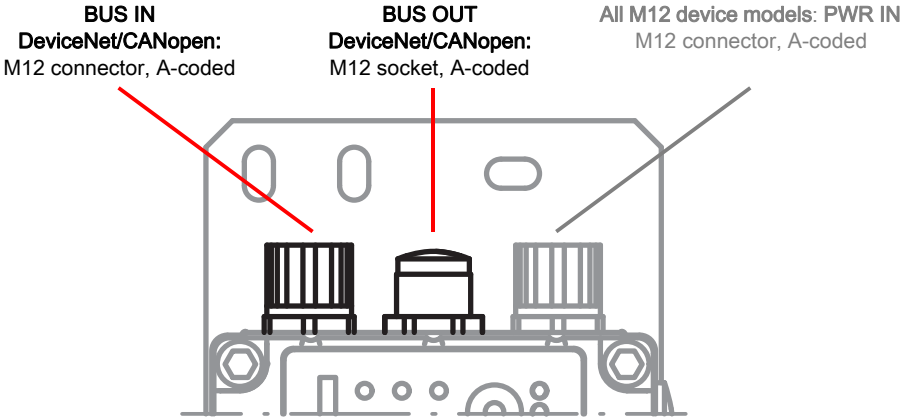

Figure 9.5: Location and designation of the M12 DeviceNet/CANopen connections

BUS IN (5-pin M12 connector, A-coded)			
BUS IN 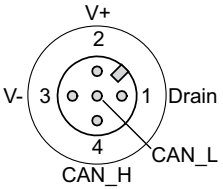 M12 connector (A-coded)	Pin	Name	Comment
	1	Drain	Shield
	2	V+	Positive supply bus transceiver (switch S2 = bus)
	3	V-	Negative supply bus transceiver (switch S2 = bus)
	4	CAN_H	Bus signal High
	5	CAN_L	Bus signal Low
	Thread	FE	Functional earth (housing)

Figure 9.6: Assignment M12 connector BUS IN

BUS OUT (5-pin M12 socket, A-coded)			
BUS OUT 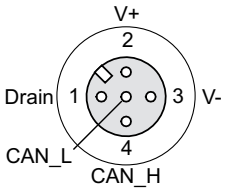 M12 socket (A-coded)	**Pin**	**Name**	**Comment**
	1	**Drain**	Shield
	2	**V+**	Positive supply bus transceiver (switch S2 = bus)
	3	**V-**	Negative supply bus transceiver (switch S2 = bus)
	4	**CAN_H**	Bus signal High
	5	**CAN_L**	Bus signal Low
	Thread	**FE**	Functional earth (housing)

Figure 9.7: Assignment M12 connector BUS OUT

Via the selector switch **S2**, the bus transceiver can optionally be supplied via Power or **V+** / **V-**.

S2 = Vin (**default**) bus transceivers are supplied internally

S2 = BUS, bus transceivers are supplied via **V+**/**V-**.

ATTENTION!

The supply voltage **V+ / V-** is 11 … 25 V DC.

Termination

NOTE

If the CANopen or DeviceNet network begins or terminates at the DDLS 200 (not a continuing bus), the **BUS OUT** connection must be terminated with the TS01-5-SA terminator plug (Part No. 50040099), which is available as an option.

In this case, please also order the TS 01-5-SA terminator plug.

9.3 Device configuration DeviceNet / CANopen

9.3.1 Baud rate conversion

Through the use of an optical data transmission system, the bus is divided into two segments. Different baud rates can be used in the physically separated segments. The DDLS 200s then function as baud rate converters. During baud rate conversion, it must be ensured that the bandwidth of the segment with the lower baud rate is adequate for processing the incoming data.

9.3.2 Sorting (switch S4.1)

With the aid of switch S4.1, sorting of the internal memory can be activated and deactivated. If sorting is deactivated (**switch S4.1 = OFF, default**), CAN frames are handled according to the FIFO principle (First-In-First-Out).

If sorting is active (switch S4.1 = ON), CAN frames are sorted according to their priority. The message with the highest priority in memory is the next one to be put onto the connected network for arbitration.

9.3.3 Bus length as a function of the baud rate

Switch position S3	Baud rate	Max. cable length per bus segment	Interface
0 (default)	125kBit	500m	CANopen / DeviceNet
1	250kBit	250m	CANopen / DeviceNet
2	500kBit	100m	CANopen / DeviceNet
3	10kBit	5000m	CANopen
4	20kBit	2500m	CANopen
5	50kBit	1000m	CANopen
6	800kBit	50m	CANopen
7	1000kBit	30m	CANopen

NOTE

The mechanical expansion of the bus system can be increased through the use of the DDLS 200.

9.4 Wiring

- The ends of the bus cables must be terminated between CAN_L and CAN_H for each physical bus segment (see Figure 9.8 R).
- Typical CAN cables consist of a twisted-pair cable with a shield that is usually used as CAN_GND. Only use cables recommended for DeviceNet or CANopen.
- The ground reference CAN_GND must only be connected to earth potential (PE) at one place on a physical bus segment (see Figure 9.8).

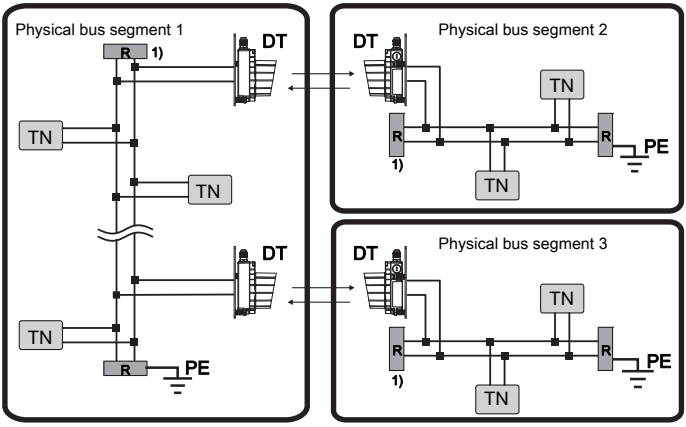

TN = network device

1) Part of the data transmission

Figure 9.8: DeviceNet / CANopen wiring

9.4.1 Termination

DeviceNet

- External termination for M12 connector version is available as an option (see Chapter 9.2)
- Value and other features are described in the DeviceNet specifications of the ODVA (Open DeviceNet Vendor Association).

CANopen

- Value: typically 120 Ω (supplied with the device, installed between CAN_L and CAN_H)
- External termination for M12 connector version is available as an option
- Value and other features are described in the CANopen specification ISO 11898.

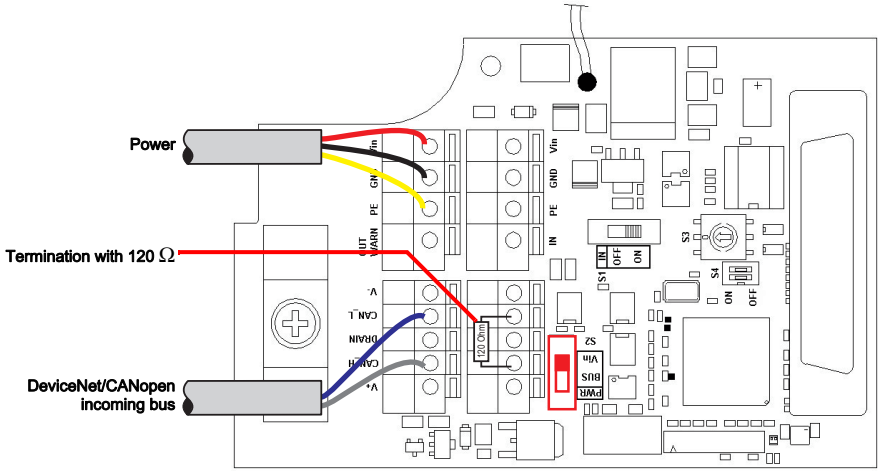

Figure 9.9: Termination in the device

A 120 Ω resistor is connected standard between terminals CAN_L and CAN_H. If the device is not the last participant of the bus segment, the resistor must be removed and the outgoing bus cable connected to the terminal strip.

9.5 DeviceNet/CANopen LED indicators

In addition to the indicators and operational controls present in all device models (bar graph, buttons, LEDs AUT, MAN, ADJ; see chapter 11.1 "Indicators and operational controls"), the DeviceNet/CANopen model also has the following indicators:

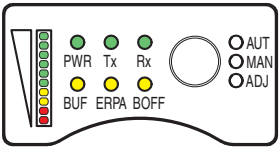

LED **PWR**:	green	=	operation indicator
	green flashing	=	transmitter / receiver unit switched off via switching input **IN** or hardware error
	off	=	no operating voltage
LED **Tx**:	green	=	data is being transmitted to the bus
	green flashing	=	with baud rates set to very low values, or with low bus traffic, the LEDs **Tx** and **Rx** flicker.
	off	=	no data is being transmitted to the bus
LED **Rx**:	green	=	data is being received by the bus
	green flashing	=	with baud rates set to very low values, or with low bus traffic, the LEDs **Tx** and **Rx** flicker.
	off	=	no data on the receiving line
LED **BUF**:	yellow	=	**buf**fer load: > 70%
	yellow flashing	=	**buf**fer load: 30 … 70%
	off	=	**buf**fer load: < 30%
LED **ERPA**:	yellow	=	DDLS 200 is in "**Er**ror **Pa**ssive" state, full communication functionality, however, in the event of an error, a passive error flag is sent (see also "BOSCH CAN Specification 2.0"). **Measures**: - check termination, wiring, baud rate
	off	=	DDLS 200 is in "Error Active" state, full communication functionality, however, in the event of an error, an active error flag is sent, normal state
LED **BOFF**:	yellow	=	DDLS 200 in "**B**us**Off**" state, does <u>**not**</u> reattempt to participate in bus traffic ⇒ **manual intervention necessary** **Measures**: - check termination, wiring, baud rate - power OFF/ON of the device supply or bus supply

Figure 9.10: Indicators and operational controls of the DeviceNet/CANopen model

9.6 Interruption of the transmission path

Response upon interruption of the optical transmission path

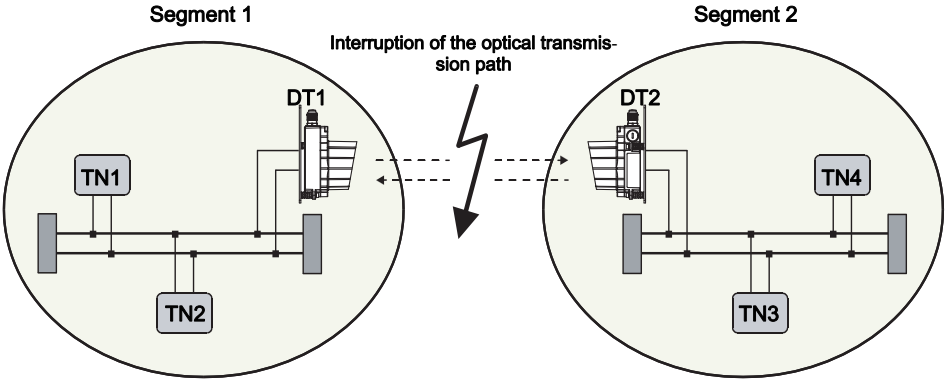

Figure 9.11: Interruption of the optical transmission path

If only data fragments are received as the result of the interruption in the optical transmission path, these are detected and are not transmitted to the CAN bus segment. The connected participants are not informed of an interruption in the optical transmission path via the protocol (switching output is activated). Data transmitted during the interruption is lost. The primary protocol is responsible for management of the subscribers. For this reason, the monitoring mechanisms of the primary protocol should be used (Node/Life Guarding, Heartbeat, ...).

Monitoring of participants

If a DDLS 200 optical data transmission system is used in a DeviceNet or CANopen system, it is beneficial to monitor all participants to determine whether they are still participating in data exchange. The following mechanisms are available for this purpose:

Heartbeat

Participants transmit cyclical heartbeat messages. If a message is not received for a certain period of time, this is detected by the connected participants as a "Heartbeat Error".

Node / Life Guarding (CANopen)

The NMT Master (Network Management Master) cyclically queries all participants and expects an answer within a certain period of time. If this response is not received, a "Guarding Error" is detected.

Response in the event of buffer overflow

If, as the result of errors on the CAN bus segment, no DDLS 200 data can be transmitted to this segment or data can be transmitted only sporadically, the DDLS 200 reacts as follows:

1. CAN frames are temporarily stored
   (64 frames for baud rates ≥ 800 kBit and 128 frames for baud rates < 800 kBit).
2. If between 30% and 70% of the memory is occupied, the "BUF" LED flashes.
3. If > 70% of the memory is occupied, the "BUF" LED is constantly illuminated.
4. In the event of a buffer overflow, the memory is completely deleted.

Response in the event of errors on a sub-segment

Other segments are not informed of errors on a sub-segment.

9.7 Important information for system integrators

⚠ ATTENTION!	
⚠	The notices provide initial information and describe the working principles of the optical data transceiver with DeviceNet and CANopen. The notices must be read by each user before the first commissioning of the DDLS 200 with DeviceNet and CANopen. Possible restrictions in the time behavior of the optical data transmission in comparison to copper-based data transmission are described here.

Due to the bit-synchronous arbitration mechanism in the CAN and the resulting high time requirements, arbitration via the optical, free-space data transmission system (abbreviated DT) is not possible. One original segment is divided into two sub-segments. Because of the division into multiple segments, there are several points which must be observed when designing the system.

9.7.1 Schematic drawing of the inner construction

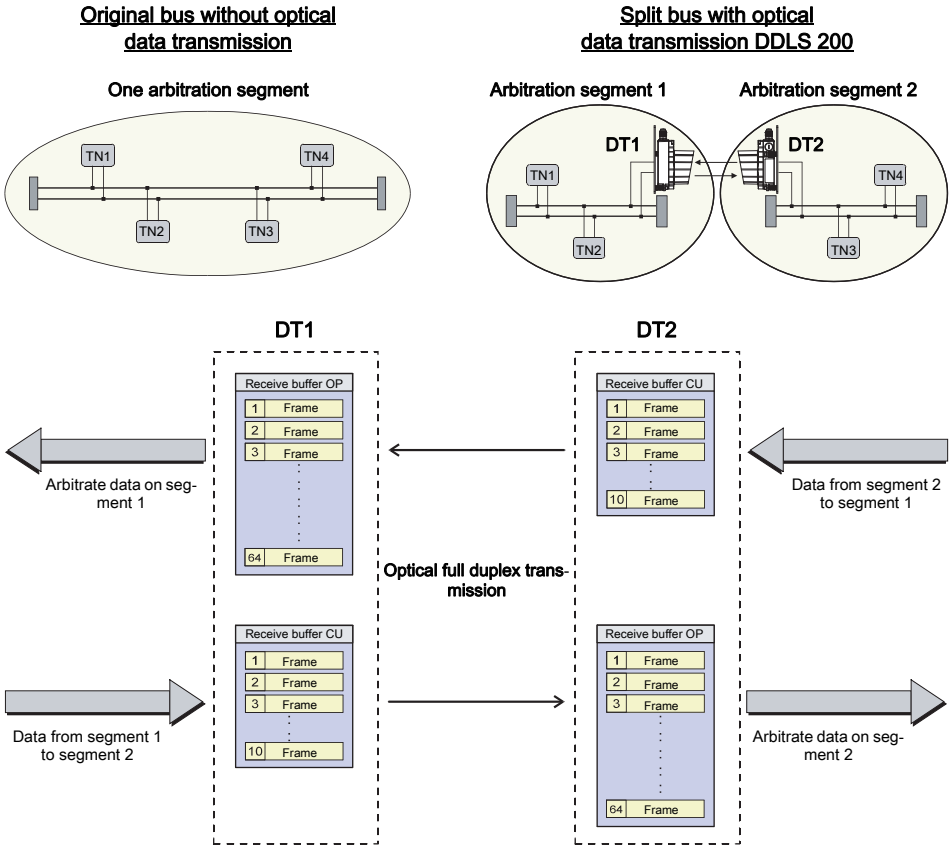

Figure 9.12: Segmentation

- Data from segment 1 are written in receive buffer CU (10 frames) and optically transmitted directly from there.
- The transmitted data are received by the DT2 and written in receive buffer OP (64 frames > 800 kBit and 128 frames < 800 kBit).
- Data in receive buffer OP are sorted by priority or processed according to the FIFO principle (depending on the operating mode used)
- Data in receive buffer OP are passed to segment 2 for arbitration.
- The same process also occurs when transmitting data from segment 2 to segment 1.

9.7.2 Time behavior

Telegram delay from segment to segment

- Typical propagation time delay of the messages in one direction
- Calculated with 10% stuffing bits

Message memory not sorted (FIFO)

Number of bits in the telegram • 1.1 • (0.5µs + T_{bit}) + 10µs

Message memory sorted

Number of bits in the telegram • 1.1 • (0.5µs + T_{bit}) + 45µs

Example 1: DeviceNet			**Example 2: CANopen**		
• 125kBit/s (→ T_{bit} = 8µs) • 4 bytes of data • Message memory sorted			• 1MBit/s (→ T_{bit} = 1µs) • 8 bytes of data • Message memory not sorted (FIFO)		
Protocol overhead	47 bits		Protocol overhead	47 bits	
Data	32 bits		Data	64 bits	
Stuffing bits	8 bit		Stuffing bits	12 bits	
→ Number of bits in the telegram	87 bits		→ Number of bits in the telegram	123 bits	
1 • telegram length		696 µs	1 • telegram length		123µs
1 • Number of bits • 0.5µs		44 µs	1 • Number of bits • 0.5µs		62 µs
Processing		45 µs	Processing		10µs
Typ. total delay		**785 µs**	**Typ. total delay**		**195µs**

The maximum delay depends on various boundary conditions:

- Bus load
- Message priority
- History
- Sorting active / not active

If a slave is addressed by a participant along an entire segment and expects an answer, twice the propagation time must be planned for (twice the optical path).

If multiple optical paths are used in a system, the delay times may be added (depending on the constellation in the bus).

The increased delay times must be taken into consideration when parameterizing the system.

9.7.3 Synchronous messages

As a result of dividing the network into multiple segments and the resulting delay of messages between the segments, there are limitations associated with synchronous transmission. The following types of telegrams are affected:

DeviceNet

Message	Function	Effects caused by DT
Bit strobe	Master simultaneously transmits 1 bit of output data to all participants.	All participants receive the message, but not simultaneously. Should therefore not be used for synchronization purposes.
Broadcast messages	One message is simultaneously transmitted to several participants.	All participants receive the message, but not simultaneously.

CANopen

Message	Function	Effects caused by DT
Sync	All participants are synchronized on a sync telegram, e.g. input data is read in and transmitted	The message is transmitted to all participants. Participants in another segment, e.g. segment 2, receive this telegram with a time delay and are, thus, not synchronized with the participants in segment 1.
Time stamp	Transmits time information.	All participants receive the message. Participants in a segment other than the producer of the message receive this information with a time delay. This results in an error in the timing information: Min. T_{tot} = number of bits in the telegram x (0.5 µs +T_{Bit}) + 100 µs

9.7.4 Other implementation notes

Bus expansion is maximized by dividing into two sub-segments:

- **Without DT**: 1x max. bus length
- **With DT**: 2x max. bus length + optical path

With DeviceNet, make certain that participants with large quantities of data or long response times are as high as possible in the scan list.

If the master of a DeviceNet network regularly begins a new scanning process even though not all slave responses have been received, proceed as follows:

1. Make certain that participants with large quantities of data or long response times are as high as possible in the scan list. If not, the order should be rearranged.
2. Increase interscan delays until all responses are received within a single scanning cycle.

10 Ethernet

The Ethernet model of the DDLS 200 has the following features:

- Operating ranges 120 m, 200 m, 300 m
- Supports 10Base-T and 100Base-TX (half and full duplex)
- Effective data transmission with 2 MBit/s full duplex
- Supports autopolarity and autonegotiation (Nway)
- Supports frames up to 1522 bytes in length
- The DDLS 200 for Ethernet does not occupy a MAC address
- Protocol-independent (transmits all protocols that are based on TCP/IP and UDP, e.g., Ethernet, Modbus TCP/IP, PROFINET V1+V2)
- RJ45 connector (a separate screwed cable gland is used to achieve degree of protection IP 65)
- M12 connector, D-coded
- Conversion of 10Base-T to 100Base-TX and vice versa possible
- Internal 16 kByte message memory (sufficient for approx. 250 short telegrams)
- Increased network expansion owing to optical data transmission:
    - Without optical data transmission = 100 m
    - With optical data transmission = 2 • 100 m + optical path
- Cascading of several DDLS 200 is possible (see Chapter 4.3)

10.1 Ethernet connection - devices with screwed cable glands and terminals

Electrical connection to Ethernet is realized using the RJ45 socket **X1**.

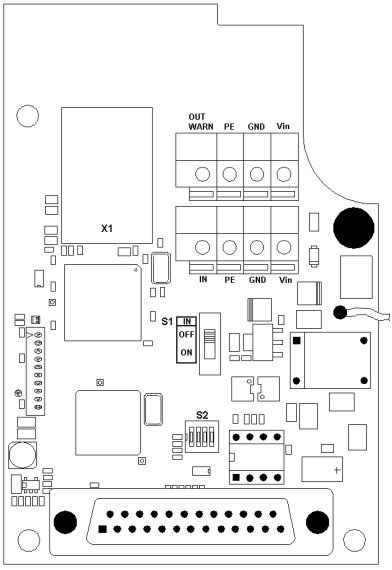

Socket	Function	
X1	RJ45 socket for 10Base-T or 100Base-TX	
Switch	**Position**	**Function**
S2.1	**ON**	**Autonegotiation active (default)**
	OFF	Autonegotiation deactivated
S2.2	ON	100 MBit
	OFF	**10 MBit (default)**
S2.3	ON	Full duplex
	OFF	**Half duplex (default)**
S2.4	ON	Reserved
	OFF	**Reserved (default)**

NOTE

If autonegotiation is active (S2.1 = ON), the position of switches S2.2 and S2.3 is irrelevant. The operating mode is determined automatically.

⚠ ATTENTION!

Please observe the notes on cabling in chapter 10.4.

Figure 10.1: Connection board of the Ethernet model

10.2 Ethernet connection - devices with M12 connectors

The electrical connection of Ethernet is easily performed using M12 connectors. Ready-made connection cables in a variety of lengths are available as accessories for the Ethernet connection (see chapter 14 "Accessories").

For all M12 device models, the connection is made via the left, D-coded connector **BUS IN** (see Figure 10.2).

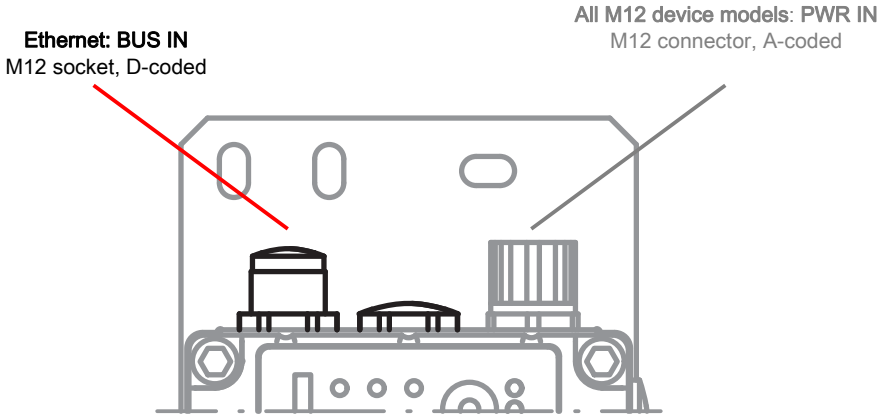

Figure 10.2:Location and designation of the M12 Ethernet connections

BUS IN (4-pin M12 socket, D-coded)			
BUS IN 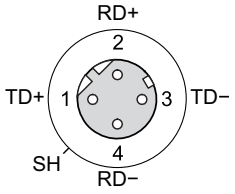 M12 socket (D-coded)	**Pin**	**Name**	**Comment**
	1	**TD+**	Transmit data +
	2	**RD+**	Receive data +
	3	**TD-**	Transmit Data –
	4	**RD-**	Receive data –
	SH (thread)	**FE**	Functional earth (housing)

Figure 10.3:Assignment M12 connector BUS IN for Ethernet

10.3 Device configuration Ethernet

10.3.1 Autonegotiation (Nway)

If the switch S2.1 of the DDLS 200 is set to ON (default), the device is in autonegotiation mode. This means that the DDLS 200 detects the transmission characteristics of the connected partner unit automatically (10MBit or 100MBit, full or half duplex) and adjusts itself accordingly.

If both devices are in autonegotiation mode, they adjust to the highest common denominator.

If a certain transmission type is to be required, the autonegotiation function must be deactivated (S2.1 = OFF). The transmission characteristics can then be set using the switches S2.2 and S2.3.

10.3.2 Transmission rate conversion

Through the use of an optical data transmission system, the Ethernet is divided into two segments. Different transmission rates can be used in the physically separated segments. The DDLS 200then functions as transmission rate converter. During transmission rate conversion, it must be ensured that the bandwidth of the segment with the lower transmission rate is adequate for processing the incoming data.

10.3.3 Network expansion

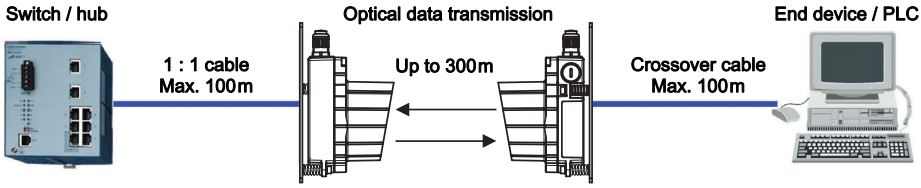

Figure 10.4: Network expansion

NOTE	
	The network expansion of the bus system can be increased through the use of the DDLS 200.

10.4 Wiring

NOTE	
	As shown in figure 10.5 through 10.7, a distinction is to be made between a 1 : 1 cable and a crossover cable. The crossover cable is required whenever the participants (switch, hub, router, PC, PLC, etc.) connected to the DDLS 200 do not provide "autocrossing". If the "autocrossing" function is available in the connected participants, a normal 1 : 1 cable can be used.

DDLS 200 between switch/hub and end device/PLC

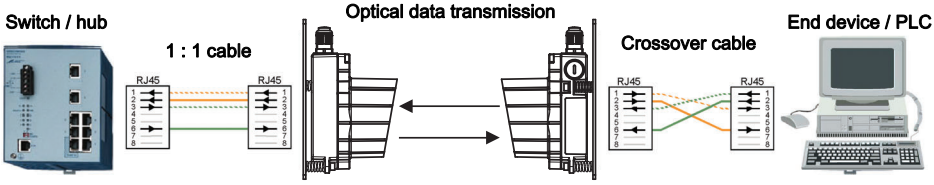

Figure 10.5: DDLS 200 between switch/hub and end device/PLC

NOTE	
	Make sure that the 1 : 1 cable or crossover cable are connected correctly. Do not plug the 1 : 1 cable to the switch/hub into the "Uplink" port.

DDLS 200 between switch/hub and switch/hub

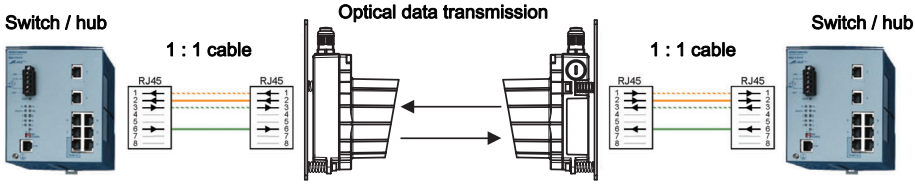

Figure 10.6: DDLS 200 between switch/hub and switch/hub

NOTE	
	Make sure that the 1 : 1 cable or crossover cable are connected correctly. Do not plug the 1 : 1 cable to the switch/hub into the "Uplink" port.

DDLS 200 between end device/PLC and end device/PLC

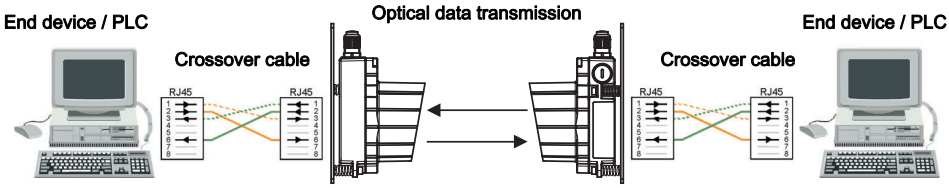

Figure 10.7: DDLS 200 between end device/PLC and end device/PLC

10.4.1 Assignment of the RJ45 and M12 Ethernet cables

For the Ethernet models of the DDLS 200, the following pin assignments apply for the RJ45 and M12 connection cables.

RJ45 to RJ45 - 1 : 1

Signal	Function	Core color	Pin RJ45		Pin RJ45
TD+	Transmit data +	Yellow	1 / TD+	<-->	1 / TD+
TD-	Transmit Data –	Orange	2 / TD-	<-->	2 / TD-
RD+	Receive data +	White	3 / RD+	<-->	3 / RD+
RD-	Receive data –	Blue	6 / RD-	<-->	6 / RD-

RJ45 to RJ45 - Crossover

Signal	Function	Core color	Pin RJ45		Pin RJ45
TD+	Transmit data +	Yellow	1 / TD+	<-->	3 / RD+
TD-	Transmit Data –	Orange	2 / TD-	<-->	6 / RD-
RD+	Receive data +	White	3 / RD+	<-->	1 / TD+
RD-	Receive data –	Blue	6 / RD-	<-->	2 / TD-

M12 connector - D-coded with open cable end

Signal	Function	Core color	Pin M12		Core
TD+	Transmit data +	Yellow	1 / TD+	<-->	YE
TD-	Transmit Data –	Orange	3 / TD-	<-->	OG
RD+	Receive data +	White	2 / RD+	<-->	WH
RD-	Receive data –	Blue	4 / RD-	<-->	BU

M12 connector to M12 connector - D-coded

Signal	Function	Core color	Pin M12		Pin M12
TD+	Transmit data +	Yellow	1 / TD+	<–>	1 / TD+
TD-	Transmit Data –	Orange	3 / TD-	<–>	3 / TD-
RD+	Receive data +	White	2 / RD+	<–>	2 / RD+
RD-	Receive data –	Blue	4 / RD-	<–>	4 / RD-

M12 connector, D-coded to RJ45 - 1 : 1

Signal	Function	Core color	Pin M12		Pin RJ45
TD+	Transmit data +	Yellow	1 / TD+	<–>	1 / TD+
TD-	Transmit Data –	Orange	3 / TD-	<–>	2 / TD-
RD+	Receive data +	White	2 / RD+	<–>	3 / RD+
RD-	Receive data –	Blue	4 / RD-	<–>	6 / RD-

M12 connector, D-coded to RJ45 - Crossover

Signal	Function	Core color	Pin M12		Pin RJ45
TD+	Transmit data +	Yellow	1 / TD+	<–>	3 / RD+
TD-	Transmit Data –	Orange	3 / TD-	<–>	6 / RD-
RD+	Receive data +	White	2 / RD+	<–>	1 / TD+
RD-	Receive data –	Blue	4 / RD-	<–>	2 / TD-

10.4.2 Installing cable with RJ45 connector

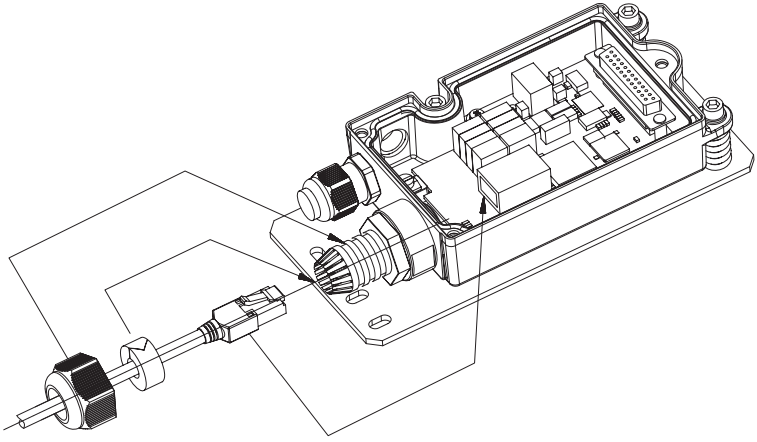

Figure 10.8: Installing cable with RJ45 connector

10.5 LED indicators Ethernet

In addition to the indicators and operational controls present in all device models (bar graph, buttons, LEDs AUT, MAN, ADJ; see chapter 11.1 "Indicators and operational controls"), the Ethernet model also has the following indicators:

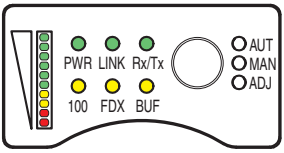

LED **PWR**:	green	=	operation indicator.
	green flashing	=	transmitter / receiver unit switched off via switching input **IN** or hardware error.
	off	=	no operating voltage.
LINK LED:	green	=	LINK OK.
	off	=	no LINK present.
Rx/Tx LED:	green	=	data is being received by the bus.
	red	=	data is being transmitted to the bus.
	orange	=	data is being received by the bus or transmitted to the bus simultaneously.
	off	=	no data is being received by the bus or transmitted to the bus.
100 LED:	yellow	=	**100**Base-Tx connected
	off	=	10Base-T connected
FDX LED:	yellow	=	full duplex (**F**ull-**D**uple**x**)
	off	=	half duplex
BUF LED:	yellow	=	internal buffer (**Buf**fer) full, message rejected.
	off	=	message not rejected.

Figure 10.9: Indicators and operational controls of the Ethernet model

10.6 Important information for system integrators

⚠ ATTENTION!	
⚠	The notices provide initial information and describe the working principles of the optical data transceiver with Ethernet. The notices must be read by each user before the first commissioning of the DDLS 200 with Ethernet. Possible restrictions in the time behavior of the optical data transmission in comparison to copper-based data transmission are described here.

Using the DDLS 200 for Ethernet, 10Base-T or 100Base-TX with 2 MBit is transmitted optically e.g. to a moving conveyor system where it is then converted back into 10Base-T or 100Base-TX.

The DDSL 200 is connected to the Ethernet via a twisted pair port with an RJ45 connector or an M12 connector. An external switch reduces the data flow along the optical transmission path by filtering the messages. Only messages for participants located downstream of the optical data transmission path are actually transmitted. The data throughput rate of the optical path is max. 2 MBit/s.

10.6.1 Typical bus configuration

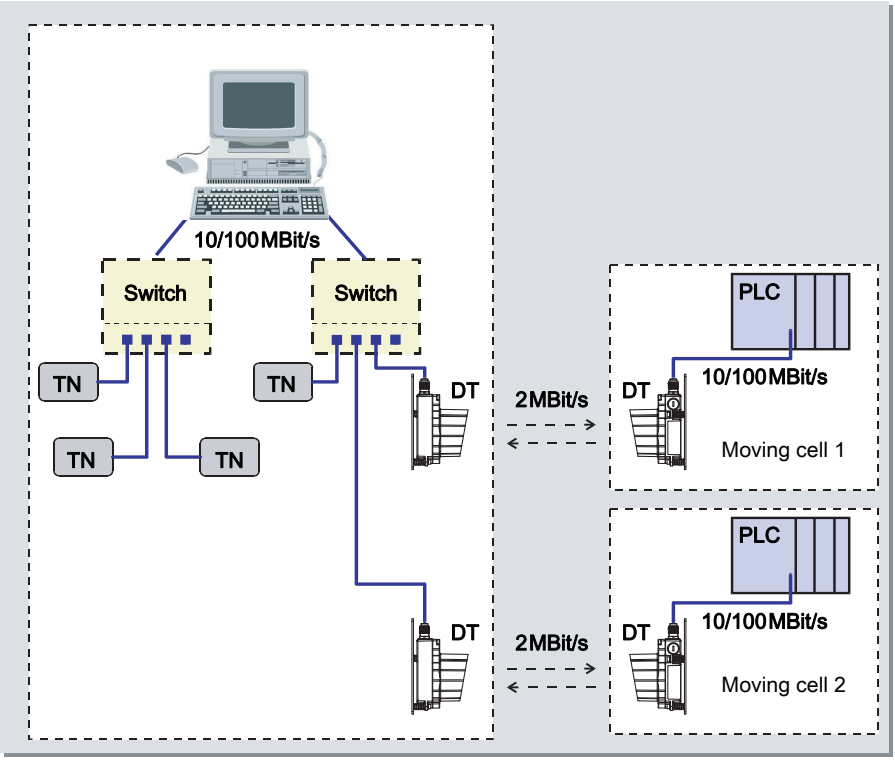

Figure 10.10: Typical Ethernet bus configuration

The optical data path has a maximum data rate of 2MBit/s in each direction of data transmission. In the network, it must be ensured that the **average** data rate in each direction of transmission is less than or equal to 2MBit/s. This is, amongst others, achieved by the following measures.

- **Address filtering by upstream switch:**
  The upstream switch ensures that only messages are transmitted that are intended for the participant on the other end of the optical data transmission path. This leads to a significant reduction in data
- **Receive buffer:**
  Via the 16kByte receive buffer, brief peak loads can be managed without data loss. If the receive buffer overflows, the subsequent messages are rejected (dropped).
- **Primary transmission protocol:**
  The primary protocol (e.g., TCP/IP) ensures that messages are re-sent if they are lost or have remained unacknowledged. In addition, protocols such as TCP/IP automatically adapt to the available bandwidth of the transmission medium.

10.6.2 Time behavior

Flow chart

Assumption: The host computer wants to transmit a travel command to the PLC via the optical data transmission path (see figure 10.10).

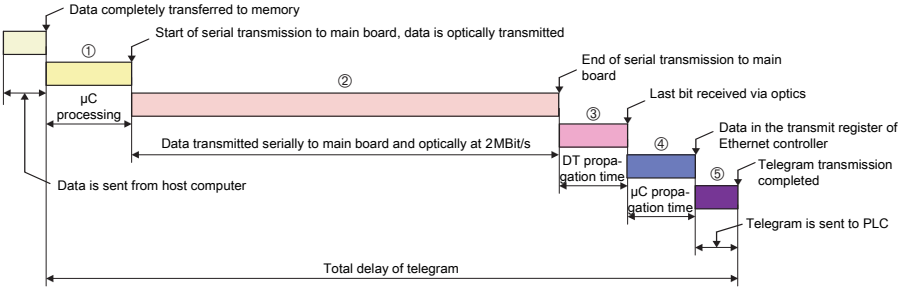

Figure 10.11: Typical Ethernet telegram structure

Description of time segments

Pos.	Description	Time (estimated)		Comment
	DSP processing time for preparing data to be sent via optical interface	Approx. 30µs		Telegrams which are still being sent or still in memory may delay further processing.
	Sending data via optical interface with 2MBit/s	Number of bits in telegram • 550ns		
	Delay caused by optical conversion and light propagation time	1.2 µs	2.2 µs	Signal is delayed by approx. 3.3ns per meter of optical path
	DSP processing of data between optics and writing to Ethernet controller	Approx. 30µs		
	Data is sent to PLC	Number of bits in the telegram • 0.1µs at 10MBit/s (0.01µs at 100MBit/s)		

Signal delay

The typical delay of a message from a DDLS 200 to the opposing DDLS 200 is:

Number of bits in the telegram • (0.55µs + T_{bit} [1]) + 60µs

1) T_{bit} for 10Base-T = 0.10µs, T_{bit} for 100Base-TX = 0.01µs

NOTE	
	The maximum delay is dependent on various factors (bus loading, history, …).

Examples 10Base-T Ethernet

	Minimum telegram (64bytes)	Medium telegram (500bytes)	Maximum telegram (1,518 bytes)
Header	18bytes	18bytes	18bytes
Data	46bytes	482bytes	1,500bytes
	30µs	30µs	30µs
	282µs	2,200µs	6,680µs
	Disregarded	Disregarded	Disregarded
	30µs	30µs	30µs
	52µs	400µs	1,214µs
Sum	**394µs**	**2,660µs**	**7,954µs**

Examples 100Base-TX Ethernet

	Minimum telegram (64bytes)	Medium telegram (500bytes)	Maximum telegram (1,518 bytes)
Header	18bytes	18bytes	18bytes
Data	46bytes	482bytes	1,500bytes
	30µs	30µs	30µs
	282µs	2,200µs	6,680µs
	Disregarded	Disregarded	Disregarded
	30µs	30µs	30µs
	5µs	40µs	121µs
Sum	**347µs**	**2,300µs**	**6,861µs**

11 Commissioning / Operation (all device models)

11.1 Indicators and operational controls

All DDLS 200 device models have the following indicators and operational controls:

- Bar graph with 10 LEDs
- Operating mode LEDs AUT, MAN, ADJ
- Operating mode button

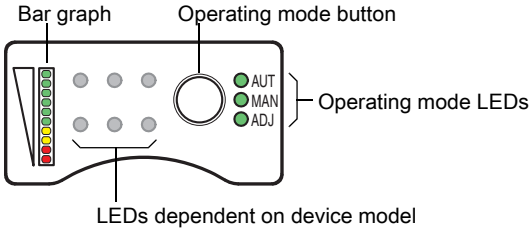

Figure 11.1: Indicators and operational controls common to all DDLS 200 device models

Bar graph

The bar graph displays the quality of the reception signal (received signal level) at its own (operating modes "Automatic" and "Manual") or opposing (operating mode "Adjust") DDLS 200 (Figure 11.2).

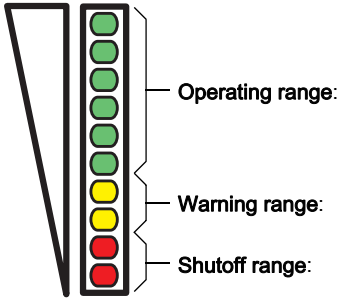

Good received signal level, optical data transmission active, function reserve, output **OUT WARN** not active (0 … 2VDC)

Received signal level in the warning range, continued error-free data transmission, no function reserve, output **OUT WARN** active (Vin - 2VDC),
peripheral error message with INTERBUS FOC model

Received signal level minimal, optical data transmission separated, output **OUT WARN** active (Vin - 2VDC)

Figure 11.2: Meaning of the bar graph for displaying the receiving level

Operating mode LEDs

The three green LEDs **AUT**, **MAN** and **ADJ** indicate the current operating mode (see chapter 11.2 "Operating modes") of the DDLS 200.

- **AUT**: operating mode "Automatic"
- **MAN**: operating mode "Manual"
- **ADJ**: operating mode "Adjust"

Operating mode button

With the operating mode button, you can switch between the three operating modes "Automatic", "Manual" and "Adjust" (see chapter 11.2 "Operating modes").

11.2 Operating modes

The following table provides an overview of the DDLS 200 operating modes.

Operating mode	Description	Optical data transmission	Bar graph assignment
Automatic, **AUT** LED illuminates	Normal operation	Active	Its own receiving level, Display of the alignment quality of the opposing device
Manual, **MAN** LED illuminates	Alignment mode, switch-off threshold on higher level	Active	Its own receiving level, Display of the alignment quality of the opposing device
Adjust, **ADJ** LED illuminates	Alignment mode, switch-off threshold on higher level	Disconnected	Received signal level of the opposing device, Display of the alignment quality of own device

Change of operating mode

AUT –> MAN Press the operating mode button for more than 2 seconds.
Only the device on which the button was pressed switches to the "Manual" operating mode (**MAN** LED illuminates).

MAN –> ADJ Press the operating mode button on one of the two devices.
Both devices switch to the "Adjust" operating mode (both **ADJ** LEDs illuminate) when both were previously in the "Manual" operating mode.

ADJ –> MAN Press the operating mode button on one of the two devices.
Both devices switch to the "Manual" operating mode (both **MAN** LEDs illuminate).

MAN –> AUT Press the operating mode button for more than 2 seconds.
Only the device on which the button was pressed switches to the "Automatic" operating mode (**AUT** LED illuminates).

NOTE

If, while in the AUT operating mode, the operating mode button is pressed for longer than 13 s, the device switches to a special diagnostic mode. The **AUT**, **MAN** and **ADJ** LEDs illuminate simultaneously (see chapter 13.2 "Diagnostic mode" on page 64).

To switch to the "Adjust" (ADJ) operating mode, both devices belonging to a transmission path must first be in the "Manual" (MAN) operating mode. It is not possible to switch directly from the "Automatic" to the "Adjust" operating mode or vice versa.

11.3 Initial commissioning

11.3.1 Switch on device / function check

After applying the operating voltage, the DDLS 200 first performs a self-test. If the self-test is successfully completed, the **PWR** or **UL** LED illuminates continuously and the DDLS 200 switches to the "Automatic" operating mode. If the connection to the opposing device exists, data can be transmitted immediately.

If the **PWR** or **UL** LED flashes after switching on, there are two possible causes: either a hardware error has occurred or the transmitter/receiver unit has switched off via the switching input **IN** ("Switching input" on page 18).

If the **PWR** or **UL** LED remains dark after switching on, there is either no voltage supply present (check connections and voltage) or a hardware error has occurred.

11.3.2 Fine alignment

If you have mounted and switched on the two DDLS 200s of a given optical transmission path and they are both in the "Automatic" operating mode, you can perform the fine alignment of the devices relative to one another with the aid of the three alignment screws.

	NOTE
	Note that "alignment" always refers to the transmitter whose beam is to be positioned as exactly as possible on the opposing receiver. At the maximum operating range, the bar graph does not show full-scale deflection even with optimal alignment!

The DDLS 200 supports fast and easy fine alignment. The **optimization of the alignment** between the two devices of one transmission path can be performed **by just one person**. Use the following steps as a set of numbered instructions:

1. Both devices are located close to one another (> 1 m). Ideally, the bar graphs of both devices display maximum full-scale deflection.
2. Switch both devices to "Manual" (**MAN**) by pressing the button for a long time (> 2 s). Data transmission remains active, only the internal switch-off threshold is changed to the warning threshold (yellow LEDs).
3. While in the "Manual" operating mode, move until data transmission of the DDLS 200 is interrupted. You can normally give the vehicle a travel command up to the end of the aisle. The vehicle stops immediately upon interruption of data transmission. The devices are not yet optimally aligned with one another.
4. Briefly press the button to switch both devices to the "Adjust" operating mode (**ADJ**). Data transmission remains interrupted.
5. The devices can now be individually aligned. The result of the alignment can be read directly in the bar graph.
6. When both devices are aligned, briefly pressing the button on one of the devices is enough to switch both back to the "Manual" operating mode (**MAN**). Data transmission is again active; the vehicle can continue its path. If data transmission is interrupted again, repeat steps 3 through 6.
7. If the data transmission and the alignment are OK through the end of the path of motion, switch both devices back to the "Automatic" (**AUT**) operating mode by pressing the button for a relatively long time (> 2s). The optical data transceiver is now ready for operation.

11.4 Operation

During operation ("Automatic" operating mode) the DDLS 200 operates maintenance-free. Only the glass optics need to be cleaned occasionally in the event of soiling. This can be checked by analyzing the switching output **OUT WARN** (with the INTERBUS fiber-optic-cable model, a peripheral error message is also available). If the output is set, soiling of the DDLS 200's glass optics is often the cause (see chapter 12.1 "Cleaning").

It must still be ensured that the light beam is not interrupted at any time.

⚠ ATTENTION!	
⚠	If, during operation of the DDLS 200, the light beam is interrupted or one of the two devices is switched voltage free, the effect of the interruption on the entire network is equivalent to the interruption of a data line! In the event of an interruption (light beam interruption or switched voltage-free), the DDLS 200 switches off the network to a non-interacting state. The system reactions in the event of an interruption are to be defined together with the supplier of the control system.

12 Maintenance

12.1 Cleaning

The optical window of the DDLS 200 is to be cleaned monthly or as needed (warning output). To clean, use a soft cloth and a cleaning agent (standard glass cleaner).

⚠ ATTENTION!	
⚠	Do not use solvents and cleaning agents containing acetone. Use of improper cleaning agents can damage the optical window.

13 Diagnostics and troubleshooting

13.1 Status indicator on the device

The LEDs on the control panel of the DDLS 200 provide information about possible faults and errors. The descriptions of the states of the DDLS 200's LEDs are found for

- **All models** in Chapter 11.1
- the **model PROFIBUS / RS 485** in Chapter 5.4
- the **model INTERBUS 500kBit/s / RS 422** in Chapter 6.3
- the **model INTERBUS 2MBit/s FOC** in Chapter 7.3
- the **model Data Highway + / Remote I/O** in Chapter 8.3
- the **model DeviceNet / CANopen** in Chapter 9.5
- the **model Ethernet** in Chapter 10.5

NOTE	
	The INTERBUS 2MBit/s FOC model of the DDLS 200 is an INTERBUS participant (Ident code: 0x0C = 12dec). You can also use the diagnostic options available via the INTERBUS.

13.2 Diagnostic mode

In the diagnostic mode, the optical received signal level of the DDLS 200 is monitored. This function is designed to support the diagnosis of short optical light beam interruptions as part of the bus diagnosis.

To enter the diagnostic mode, the DDLS 200 must be in the **AUT** state and the operating mode button must be pressed for longer than 13s. After the button is released, all 3 operating mode LEDs illuminate. If the light beam is interrupted now, the 3 operating mode LEDs start to flash. This state is maintained until the flashing is acknowledged by a brief press of the button. Afterwards, the 3 operating mode LEDs illuminate continuously again. To exit the diagnostic mode, the button must be pressed for more than 13s.

During diagnosis, the DDLS 200 functions as if it were in **AUT** state. Hence, just a normal data transmission takes place, and the thresholds for warning and switch-off are also the same as in **AUT** mode.

Each DDLS 200 must be set to diagnostic mode individually. This is in contrast to switching from **MAN** to **ADJ** mode, where both DDLS 200 change to **ADJ** state if the button on one side is pressed.

13.3 Troubleshooting

Fault	Possible cause	Remedy
PWR or **UL** LED does not illuminate	• No supply voltage. • Hardware defect.	• Check connections and supply voltage at the device; switch back on. • In event of defect, replace device and send in for repair.
PWR or **UL** LED flashes	• Transmitter/receiver unit is switched off via input **IN**. • Hardware defect.	• Check input **IN** and position of switch **S1**. • In event of defect, replace device and send in for repair.
ADJ LED flashes	• Light beam interruption or no visual connection to opposing device (when opposing device is in the "Manual" operating mode). • Misalignment of a DDLS 200 (when opposing device is in the "Manual" operating mode).	• Check light path • Realign transmission path
Bus operation not possible	• Transmission error • Wiring error • Adjustment error (termination, baud rate, configuration) • Incorrect bus cable • Transmitter/receiver unit deactivated	• See error "transmission error" • Check wiring • Check settings • Use specified bus cable • Check for correct wiring and **S1** setting • Set to "Adjust" operating mode, **ADJ** LED must not flash

Transmission error	• Incorrect bus termination
	• Shielding not connected
	• Received signal level too low due to
	  • Misalignment
	  • Soiling
	  • Operation with excessively large operating ranges
	• Protective conductor not connected
	• Influenced by parallel data path
	• Influenced by cascading data paths
	• Intense, direct ambient light
		• Disconnect/connect terminating resistors
		• Connect shielding correctly
		• Realign (check in "Adjust" operating mode)
		• Clean optical window
		• Observe operating limits
		• Connect protective conductor
		• Operate optical data transceivers with alternating frequency assignments, check parallel distances
		• Operate optical data transceivers with alternating frequency assignments
		• Remove ambient light source

14 Accessories

14.1 Accessories - Terminating resistors

Part no.	Type designation	Comment
50038539	TS 02-4-SA	M12 terminating resistor for PROFIBUS BUS OUT
50040099	TS 01-5-SA	M12 terminating resistor for DeviceNet/CANopen BUS OUT

14.2 Accessories - Connectors

Part no.	Type designation	Comment
50038538	KD 02-5-BA	M12 connector socket for PROFIBUS BUS IN or SSI interface
50038537	KD 02-5-SA	M12 connector pin for PROFIBUS BUS OUT
50020501	KD 095-5A	M12 connector PWR for voltage supply

14.3 Accessories - Ready-made cables for voltage supply

14.3.1 Contact assignment of PWR connection cable for voltage supply

PWR connection cable (5-pin socket, A-coded)			
PWR OUT WARN 2 Vin 1 3 GND 5 4 FE IN M12 socket (A-coded)	Pin	Name	Core color
	1	Vin	Brown
	2	OUT WARN	White
	3	GND	Blue
	4	IN	Black
	5	FE	Gray
	Thread	FE	Bare

14.3.2 Technical data of PWR connection cable for voltage supply

Operating temperature range In idle state: -30°C … +70°C
In motion: -5°C … +70°C

Material Sheathing: PVC

Bending radius > 50 mm

14.3.3 Order codes of PWR connection cable for voltage supply

Part no.	Type designation	Comment
50104557	K-D M12A-5P-5m-PVC	M12 socket for PWR, axial plug outlet, open cable end, cable length 5 m
50104559	K-D M12A-5P-10m-PVC	M12 socket for PWR, axial plug outlet, open cable end, cable length 10 m

14.4 Accessories - Ready-made cables for interface connection

14.4.1 General

- Cable **KB PB…** for connecting to the BUS IN/BUS OUT M12 connector
- Cable **KB ET…** for connecting to Industrial Ethernet via M12 connector
- Standard cables available in lengths from 2 … 30 m
- Special cables on request.

14.4.2 Contact assignment for PROFIBUS connection cable KB PB…

PROFIBUS connection cable (5-pin socket/connector, B-coded)

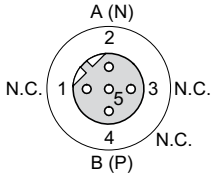

M12 socket (B-coded)

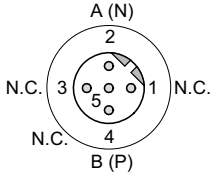

M12 connector (B-coded)

Pin	Name	Core color
1	N.C.	–
2	A (N)	Green
3	N.C.	–
4	B (P)	Red
5	N.C.	–
Thread	FE	Bare

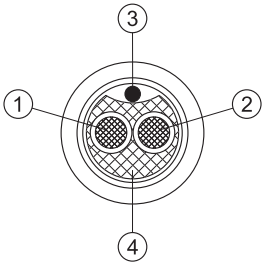

1 Conductor with insulation **red**
2 Conductor with insulation **green**
3 Drain wire
4 Fibrous fleece

Figure 14.1: Cable structure of PROFIBUS connection cable

ПРОМЭЛЕКТРОНИКА / sales@prom-elec.com

14.4.3 Technical data for PROFIBUS connection cable KB PB…

Operating temperature range
In idle state: -40°C ... +80°C
In motion: -5°C … +80°C

Material
The cables fulfill the PROFIBUS requirements,
Free of halogens, silicone and PVC

Bending radius
> 80 mm, suitable for drag chains

14.4.4 Order codes for M12 PROFIBUS connection cables KB PB…

Part no.	Type designation	Comment
50104181	KB PB-2000-BA	M12 socket for BUS IN, axial cable outlet, open cable end, cable length 2 m
50104180	KB PB-5000-BA	M12 socket for BUS IN, axial cable outlet, open cable end, cable length 5 m
50104179	KB PB-10000-BA	M12 socket for BUS IN, axial cable outlet, open cable end, cable length 10 m
50104178	KB PB-15000-BA	M12 socket for BUS IN, axial cable outlet, open cable end, cable length 15 m
50104177	KB PB-20000-BA	M12 socket for BUS IN, axial cable outlet, open cable end, cable length 20 m
50104176	KB PB-25000-BA	M12 socket for BUS IN, axial cable outlet, open cable end, cable length 25 m
50104175	KB PB-30000-BA	M12 socket for BUS IN, axial cable outlet, open cable end, cable length 30 m
50104188	KB PB-2000-SA	M12 connector for BUS OUT, axial cable outlet, open cable end, cable length 2 m
50104187	KB PB-5000-SA	M12 connector for BUS OUT, axial cable outlet, open cable end, cable length 5 m
50104186	KB PB-10000-SA	M12 connector for BUS OUT, axial cable outlet, open cable end, cable length 10 m
50104185	KB PB-15000-SA	M12 connector for BUS OUT, axial cable outlet, open cable end, cable length 15 m
50104184	KB PB-20000-SA	M12 connector for BUS OUT, axial cable outlet, open cable end, cable length 20 m
50104183	KB PB-25000-SA	M12 connector for BUS OUT, axial cable outlet, open cable end, cable length 25 m
50104182	KB PB-30000-SA	M12 connector for BUS OUT, axial cable outlet, open cable end, cable length 30 m
50104096	KB PB-1000-SBA	M12 connector + M12 socket for PROFIBUS, axial cable outlets, cable length 1 m
50104097	KB PB-2000-SBA	M12 connector + M12 socket for PROFIBUS, axial cable outlets, cable length 2 m
50104098	KB PB-5000-SBA	M12 connector + M12 socket for PROFIBUS, axial cable outlets, cable length 5 m
50104099	KB PB-10000-SBA	M12 connector + M12 socket for PROFIBUS, axial cable outlets, cable length 10 m
50104100	KB PB-15000-SBA	M12 connector + M12 socket for PROFIBUS, axial cable outlets, cable length 15 m
50104101	KB PB-20000-SBA	M12 connector + M12 socket for PROFIBUS, axial cable outlets, cable length 20 m
50104174	KB PB-25000-SBA	M12 connector + M12 socket for PROFIBUS, axial cable outlets, cable length 25 m
50104173	KB PB-30000-SBA	M12 connector + M12 socket for PROFIBUS, axial cable outlets, cable length 30 m

14.4.5 Contact assignment for M12 Ethernet connection cable KB ET…

M12 Ethernet connection cable (4-pin connector, D-coded, on both sides)			
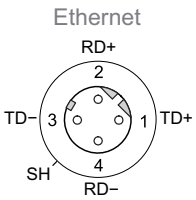 M12 connector (D-coded)	Pin	Name	Core color
	1	TD+	Yellow
	2	RD+	White
	3	TD-	Orange
	4	RD-	Blue
	SH (thread)	FE	Bare

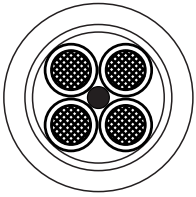

Core colors

WH
YE
BU
OG

Conductor class: VDE 0295, EN 60228, IEC 60228 (Class 5)

Figure 14.2: Cable structure of Industrial Ethernet connection cable

14.4.6 Technical data for M12 Ethernet connection cable KB ET…

Operating temperature range	In idle state: -50°C ... +80°C In motion: -25°C ... +80°C In motion: -25°C ... +60°C (when used with drag chains)
Material	Cable sheath: PUR (green), wire insulation: foam-PE, Free of halogens, silicone and PVC
Bending radius	> 65 mm, suitable for drag chains
Bending cycles	> 10^6, perm. acceleration < 5 m/s^2

14.4.7 Order codes for M12 Ethernet connection cables KB ET…

Part no.	Type designation	Comment
M12 connector - open cable end		
50106738	KB ET - 1000 - SA	M12 connector for BUS IN, axial cable outlet, open cable end, cable length 1 m
50106739	KB ET - 2000 - SA	M12 connector for BUS IN, axial cable outlet, open cable end, cable length 2 m
50106740	KB ET - 5000 - SA	M12 connector for BUS IN, axial cable outlet, open cable end, cable length 5 m
50106741	KB ET - 10000 - SA	M12 connector for BUS IN, axial cable outlet, open cable end, cable length 10 m
50106742	KB ET - 15000 - SA	M12 connector for BUS IN, axial cable outlet, open cable end, cable length 15 m
50106743	KB ET - 20000 - SA	M12 connector for BUS IN, axial cable outlet, open cable end, cable length 20 m
50106745	KB ET - 25000 - SA	M12 connector for BUS IN, axial cable outlet, open cable end, cable length 25 m
50106746	KB ET - 30000 - SA	M12 connector for BUS IN, axial cable outlet, open cable end, cable length 30 m
M12 connector - M12 connector		
50106898	KB ET - 1000 - SSA	2x M12 connector for BUS IN, axial cable outlets, cable length 1 m
50106899	KB ET - 2000 - SSA	2x M12 connector for BUS IN, axial cable outlets, cable length 2 m
50106900	KB ET - 5000 - SSA	2x M12 connector for BUS IN, axial cable outlets, cable length 5 m
50106901	KB ET - 10000 - SSA	2x M12 connector for BUS IN, axial cable outlets, cable length 10 m
50106902	KB ET - 15000 - SSA	2x M12 connector for BUS IN, axial cable outlets, cable length 15 m
50106903	KB ET - 20000 - SSA	2x M12 connector for BUS IN, axial cable outlets, cable length 20 m
50106904	KB ET - 25000 - SSA	2x M12 connector for BUS IN, axial cable outlets, cable length 25 m
50106905	KB ET - 30000 - SSA	2x M12 connector for BUS IN, axial cable outlets, cable length 30 m