Technical data sheet
Mounting system
Part no.: 50117254
BTU 200M-D14

Figure can vary

Contents

- Technical data
- Dimensioned drawings
- Accessories

ПРОМЭЛЕКТРОНИКА / sales@prom-elec.com

Technical data

Basic data

Contains	2 M3 x 20 screws
	2x M3 x 16 screw
	2x position washers
Suitable for	18 series sensors
	25B series sensors
	25C series sensors
	28 series sensors
	3B series sensors
	3C series sensors
	5 series sensors
	55 series sensors

Mechanical data

Standard designation, metal mounting device	Aluminum
	Steel, galvanized
Design of mounting device	Mounting system
Type of fastening, at system	For 14 mm rod
	Sheet-metal mounting
Type of fastening, at device	Screw type
	Suited for M3 screws
Type of mounting device	Adjustable
	Clampable
	Turning, 360°
Mounting device material	Metal
ITEM-compatible	No

Classification

Customs tariff number	73182900
eCl@ss 5.1.4	27279202
eCl@ss 8.0	27279202
eCl@ss 9.0	27273701
eCl@ss 10.0	27273701
eCl@ss 11.0	27273701
ETIM 5.0	EC002498
ETIM 6.0	EC003015
ETIM 7.0	EC003015

Dimensioned drawings

All dimensions in millimeters

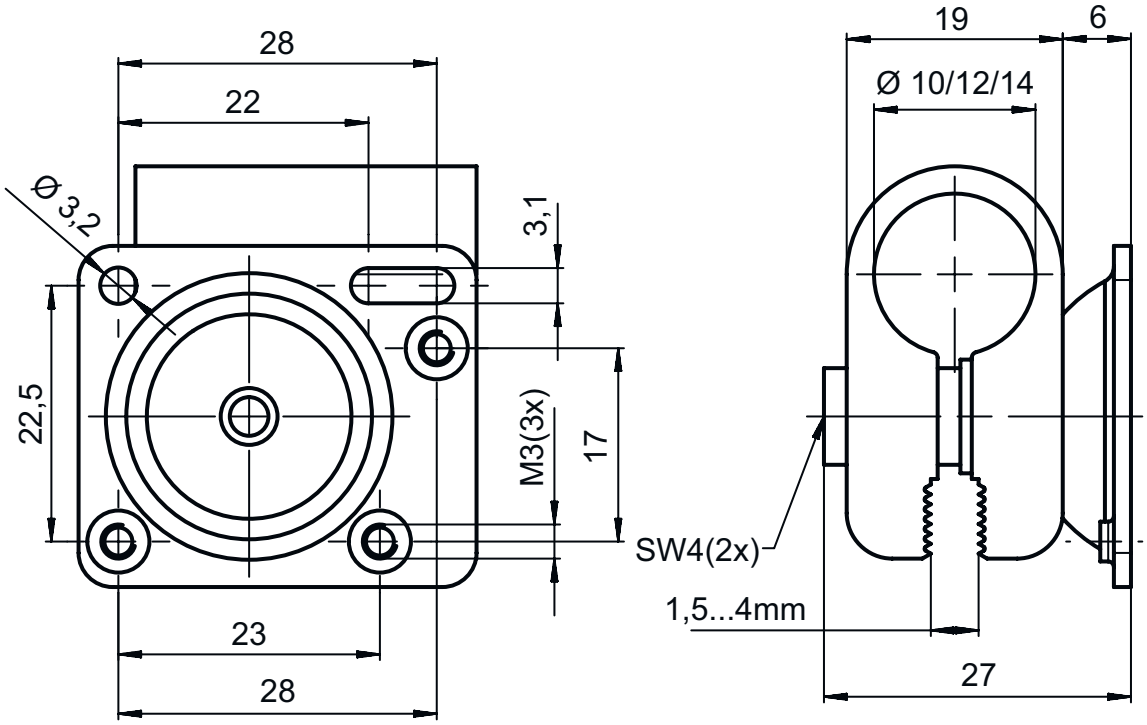

Accessories

Micro-triad-type reflectors

	Part no.	Designation	Article	Description
	50040895	MTKS 20x20	Reflector	Design: Rectangular Reflective surface: 20 mm x 20 mm Triple reflector size: 1.2 mm Material: Plastic Base material: Plastic Chemical designation of the material: PMMA8N Fastening: Through-hole mounting, Adhesive

Note
✎ A list with all available accessories can be found on the Leuze website in the Download tab of the article detailed page.

ПРОМЭЛЕКТРОНИКА / sales@prom-elec.com