Technical data sheet
Mounting bracket
Part no.: 50118543
BT 300M.5

Figure can vary

Contents

- Technical data
- Dimensioned drawings

ПРОМЭЛЕКТРОНИКА / sales@prom-elec.com

Technical data

Basic data

Suitable for	25C series sensors
	46B series sensors
	46C series sensors
	8 series sensors
	ODS10
	ODSL 9

Mechanical data

Standard designation, stainless steel mounting device	V2A
Design of mounting device	Angle, L-shape
Type of fastening, at system	Through-hole mounting
Type of fastening, at device	Screw type
	Suited for M4 screws
Type of mounting device	Adjustable
Mounting device material	Stainless steel
ITEM-compatible	No

Classification

Customs tariff number	73182900
eCl@ss 5.1.4	27279202
eCl@ss 8.0	27279202
eCl@ss 9.0	27273701
eCl@ss 10.0	27273701
eCl@ss 11.0	27273701
ETIM 5.0	EC002498
ETIM 6.0	EC003015
ETIM 7.0	EC003015

Dimensioned drawings

All dimensions in millimeters

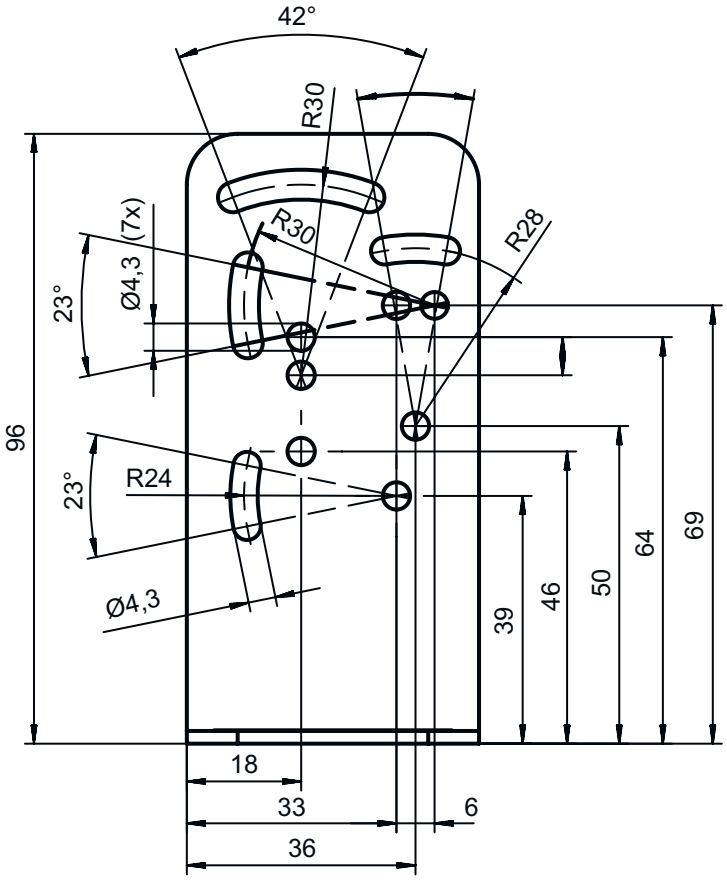

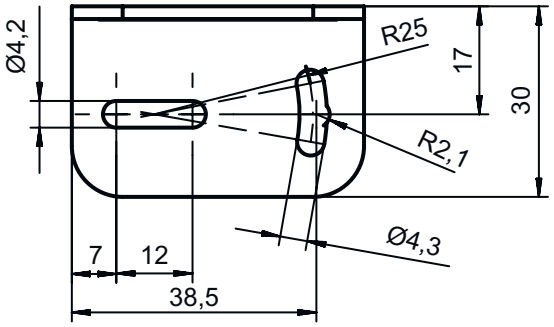

ПРОМЭЛЕКТРОНИКА / sales@prom-elec.com