Leuze

Original operating instructions

BPS 8

Bar Code Positioning System

The Sensor People

We reserve the right to make technical changes
EN • 2020-10-20 • 50105556

ПРОМЭЛЕКТРОНИКА / sales@prom-elec.com

© 2020
Leuze electronic GmbH & Co. KG
In der Braike 1
D-73277 Owen / Germany
Phone: +49 7021 573-0
Fax: +49 7021 573-199
http://www.leuze.com
info@leuze.com

1 About this document 6
1.1 Used symbols and signal words 6

2 Safety 7
2.1 Intended use 7
2.2 Foreseeable misuse 8
2.3 Competent persons 8
2.4 Exemption of liability 8
2.5 Laser safety notices 9

3 Technical data of BPS 8 11
3.1 General specifications BPS 8 11
3.2 Dimensioned drawings 13
3.3 Reading field curves 15

4 MA 8... / MA 2xxi connection units 16
4.1 MA 8.1 connection unit 16
4.2 MA 8-01 / MA 8-02 connection unit 17
4.3 MA 2xxi connection unit 17

5 Bar code tape 18
5.1 General information 18
5.2 BCB G30 ... control bar code MVS 19
5.3 Marker bar codes 22
5.4 Technical data of the BCB G30 ... bar code tape 24
5.5 Dimensioned drawing for position, control and marker bar codes 25

6 Mounting and installation 26
6.1 Mounting the bar code tape 26
6.1.1 Installation and application remarks 26
6.1.2 Cutting bar code tapes 27
6.1.3 Mounting the BCB 28
6.1.4 BCB repair with repair kit 30
6.2 Mounting the BPS 8 32
6.2.1 BT 8-01 mounting device 33
6.2.2 BT 8-0 mounting device 33
6.3 Device arrangement 35

7 Electrical connection 38
7.1 Safety notices for the electrical connection 38
7.2 Electrical connection BPS 8 38
7.2.1 BPS 8 - PWR IN - Voltage supply, RS 232, Switching input/output 38
7.3 Electrical connection via connection unit MA 8.1 40
7.3.1 Electrical connection MA 8.1 40
7.3.2 PWR IN HOST/RS 232 connector – voltage supply and RS 232 40
7.3.3 SW IN/OUT socket – switching input and switching output 41
7.3.4 BCL socket – connecting the BPS 8 to the MA 8.1 42
7.4 Electrical connection via connection unit MA 8-01 / MA 8-02 43
7.4.1 PWR IN HOST/RS485 connector – voltage supply/RS 485 43
7.4.2 SW IN/OUT socket – switching input and switching output 43
7.4.3 BCL/BPS socket – connecting the BPS 8 to the MA 8-01/MA 8-02 44
7.4.4 Termination of the RS 485 interface 45

8 Configuration / device parameters . . . 46
8.1 RS 232/RS 485 interface . . . 46
8.1.1 General information . . . 46
8.2 BPS Configuration Tool software . . . 46
8.2.1 Installation of the BPS Configuration Tool software . . . 46
8.2.2 Brief manual for the BPS Configuration Tool . . . 47
8.2.3 Setting the parameters . . . 50
8.3 Service operating mode . . . 50
8.3.1 Activate service interface . . . 50
8.3.2 Connecting the service interface . . . 51
8.3.3 Overview of commands and parameters . . . 51
8.4 Overview of the parameter structure . . . 52
8.5 Detailed description of the tabs . . . 53
8.5.1 Control . . . 53
8.5.2 Position detection . . . 54
8.5.3 Communication . . . 58
8.5.4 Switching input . . . 59
8.5.5 Switching output . . . 60

9 Protocols for position value output . . . 62
9.1 Binary protocol 1 – BPS 8 SM 10x-01 / BPS 8 SM 10x-05 . . . 62
9.1.1 Data format . . . 62
9.1.2 Request telegram to the BPS 8 SM 10x-01 / BPS 8 SM 10x-05 . . . 62
9.1.3 BPS 8 SM 10x-01 / BPS 8 SM 10x-05 response telegram . . . 63
9.2 Binary protocol 2 – BPS 8 SM 10x-02 . . . 68
9.2.1 Data format . . . 68
9.2.2 Request telegram to the BPS 8 SM 10x-02 . . . 69
9.2.3 BPS 8 SM 10x-02 response telegram . . . 70
9.3 Binary protocol 3 – BPS 8 SM 10x-03 . . . 74
9.3.1 Data format . . . 74
9.3.2 Request telegram to the BPS 8 SM 10x-03 . . . 74
9.3.3 BPS 8 SM 10x-03 response telegram . . . 75
9.4 Binary protocol 4 – BPS 8 SM 10x-04 . . . 77
9.4.1 Data format . . . 77
9.4.2 Request telegram to the BPS 8 SM 10x-04 . . . 77
9.4.3 BPS 8 SM 10x-04 response telegram . . . 79
9.4.4 Binary protocol 4 request sequences . . . 81
9.5 Binary protocol 6 – BPS 8 SM 10x-10 . . . 81
9.5.1 Data format . . . 82
9.5.2 Request telegram to the BPS 8 SM 10x-10 . . . 82
9.5.3 BPS 8 SM 10x-10 response telegram . . . 83

10 Diagnostics and troubleshooting . . . 85
10.1 Operating indicators of the LEDs . . . 85
10.2 General causes of errors . . . 85
10.3 Error on the interface . . . 86

11 Maintenance . . . 87
11.1 Cleaning . . . 87
11.2 Repairs, servicing . . . 87
11.3 Disassembling, packing, disposing . . . 87

12 Type overview and accessories . . . 88
12.1 Type overview: BPS 8 . . . 88
12.2 Type overview: Bar code tape . . . 88

12.2.1 Standard bar code tapes 88
12.2.2 Special tapes 88
12.2.3 Twin tapes 88
12.2.4 Repair tapes 89
12.2.5 Marker labels and control labels 89
12.3 Accessories – Modular connection unit 89
12.4 Accessories – Fieldbus gateway 90
12.5 Accessories – Cables 90
12.6 Accessories – Mounting device 90
12.7 Accessories - Configuration software 91

13 Appendix 92
13.1 EC Declaration of Conformity 92

1 About this document

1.1 Used symbols and signal words

CAUTION	
	Symbol indicating dangers to persons

ATTENTION LASER!	
	Symbol indicating dangers from harmful laser radiation

NOTE	
	Signal word for property damage Indicates dangers that may result in property damage if the measures for danger avoidance are not followed.

NOTE	
	Symbol for tips Text passages with this symbol provide you with further information.

	Symbol for action steps Text passages with this symbol instruct you to perform actions.

BCB	Bar code tape
BPS	Bar code Positioning System
BT	Mounting device
CDRH	Center for Devices and Radiological Health
CFR	Code of Federal Regulations
DGUV	Deutsche Gesetzliche Unfallversicherung (statutory German accident insurance association)
EMC	Electromagnetic compatibility
EN	European standard
FE	Functional earth
IEC	International Electrotechnical Commission
IO or I/O	Input/Output
IP	International Protection
LED	Light Emitting Diode
MA	Modular connection unit
MVS	Control bar code
NEC	National Electric Code
PE	Protective Earth
PWR	Power – Supply voltage
UL	Underwriters Laboratories
UV	Ultraviolet light

Table 1.1: Terms and abbreviations

2 Safety

The bar code positioning systems of the BPS 8 series and the MA 8… modular connection unit have been developed, produced and tested subject to the applicable safety standards. They correspond to the state of the art.

NOTE	
	Declaration of Conformity A copy of all declarations of conformity available for the product can be found in the appendix of this handbook (see chapter 13.1 "EC Declaration of Conformity" on see page 92).

2.1 Intended use

The bar code positioning system of the BPS 8 series is an optical measuring system which uses visible red laser light to determine the position of the BPS relative to a permanently mounted bar code tape.

The optional connector and interface unit MA 8… is intended for the easy connection of bar code positioning systems of type BPS 8.

Areas of application

The BPS 8 bar code positioning systems are designed for the following areas of application:

- Crane bridges and trolleys
- High-bay storage devices
- Side-tracking skates
- Electrical monorail systems
- Elevators

⚠ CAUTION	
	Observe intended use! The protection of personnel and the device cannot be guaranteed if the device is operated in a manner not complying with its intended use. ↳ Only operate the device in accordance with its intended use. ↳ Leuze electronic GmbH + Co. KG is not liable for damages caused by improper use. Read these operating instructions before commissioning the device. Knowledge of this document is required in order to use the equipment for its intended purpose.

⚠ CAUTION	
	Use only approved bar code tapes! The bar code tapes approved by Leuze and listed as accessories are an essential part of the measurement system. Bar code tapes not approved by Leuze are not allowed. The use of such bar code tapes is contrary to the intended use.

NOTE	
	Comply with conditions and regulations! Observe the locally applicable legal regulations and the rules of the employer's liability insurance association.

⚠ CAUTION	
	UL applications! For UL applications, use is only permitted in Class 2 circuits in accordance with the NEC (National Electric Code).

2.2 Foreseeable misuse

Any use other than that defined under "Intended use" or which goes beyond that use is considered improper use.

In particular, use of the device is not permitted in the following cases:

- in rooms with explosive atmospheres
- as stand-alone safety component in accordance with the machinery directive [1]
- for medical purposes

NOTE	
	Do not modify or otherwise interfere with the device! ↳ Do not carry out modifications or otherwise interfere with the device. The device must not be tampered with and must not be changed in any way. ↳ The use of a bar code tape not approved by Leuze is equivalent to an intervention in or change to the device/measurement system. ↳ The device must not be opened. There are no user-serviceable parts inside. ↳ Repairs must only be performed by Leuze electronic GmbH + Co. KG.

2.3 Competent persons

Connection, mounting, commissioning and adjustment of the device must only be carried out by competent persons.

Prerequisites for competent persons:

- They have a suitable technical education.
- They are familiar with the rules and regulations for occupational safety and safety at work.
- They are familiar with the technical description of the device.
- They have been instructed by the responsible person on the mounting and operation of the device.

Certified electricians

Electrical work must be carried out by a certified electrician.

Due to their technical training, knowledge and experience as well as their familiarity with relevant standards and regulations, certified electricians are able to perform work on electrical systems and independently detect possible dangers.

In Germany, certified electricians must fulfill the requirements of DGUV Provision 3 (e.g. electrician foreman). In other countries, there are respective regulations that must be observed.

2.4 Exemption of liability

Leuze electronic GmbH + Co. KG is not liable in the following cases:

- The device is not being used properly.
- Reasonably foreseeable misuse is not taken into account.
- Mounting and electrical connection are not properly performed.
- Changes (e.g., constructional) are made to the device.

1. Use as safety-related component within the safety function is possible, if the component combination is designed correspondingly by the machine manufacturer.

2.5 Laser safety notices

⚠ ATTENTION, LASER RADIATION – CLASS 2 LASER PRODUCT

Do not stare into beam

The device satisfies the requirements of IEC/EN 60825-1:2014 safety regulations for a product of laser class 2 and complies with 21 CFR 1040.10 except for conformance with IEC 60825-1 Ed. 3., as described in Laser Notice No. 56, dated May 8, 2019.

- CAUTION! Opening the device can lead to dangerous exposure to radiation.
- Never look directly into the laser beam or in the direction of reflected laser beams!

  If you look into the beam path over a longer time period, there is a risk of injury to the retina.
- Do not point the laser beam of the device at persons!
- Interrupt the laser beam using a non-transparent, non-reflective object if the laser beam is accidentally directed towards a person.
- When mounting and aligning the device, avoid reflections of the laser beam off reflective surfaces!
- CAUTION! Use of controls or adjustments or performance of procedures other than specified herein may result in hazardous light exposure.
- Observe the applicable statutory and local laser protection regulations.
- The device must not be tampered with and must not be changed in any way.
- There are no user-serviceable parts inside the device.
  Repairs must only be performed by Leuze electronic GmbH + Co. KG.
- If the scanner motor fails during the emission of laser radiation, the limit value of laser class 2 in accordance with IEC 60825-1:2014 could be exceeded. The device has safeguards to prevent this occurrence.
- If the emitted laser beam is at a standstill, immediately disconnect the faulty bar code reader from the voltage supply.
- The BPS 8 emits scanned optical radiation at a wavelength of 655 nm (red).
- Looking at the device's mirror and operating at the lowest scanning rate (500 scans/s) at a viewing distance of 100 mm results in pulses with a pulse duration shorter than 420 µs on the retina of the eye. The total pulse peak power at the exit window is less than 1.7 mW.

The average laser power is less than 1 mW in accordance with laser class 2 acc. to IEC 60825-1:2014

NOTE

Affix laser information and warning signs!

Laser warning and laser information signs are affixed to the device (see Figure 2.1):

In addition, self-adhesive laser warning and information signs (stick-on labels) are supplied in several languages (see Figure 2.2).

- Affix the laser information sheet to the device in the language appropriate for the place of use.

  When using the device in the U.S.A., use the stick-on label with the "Complies with 21 CFR 1040.10" notice.
- Affix the laser information and warning signs near the device if no signs are attached to the device (e.g., because the device is too small) or if the attached laser information and warning signs are concealed due to the installation position.

Affix the laser information and warning signs so that they are legible without exposing the reader to the laser radiation of the device or other optical radiation.

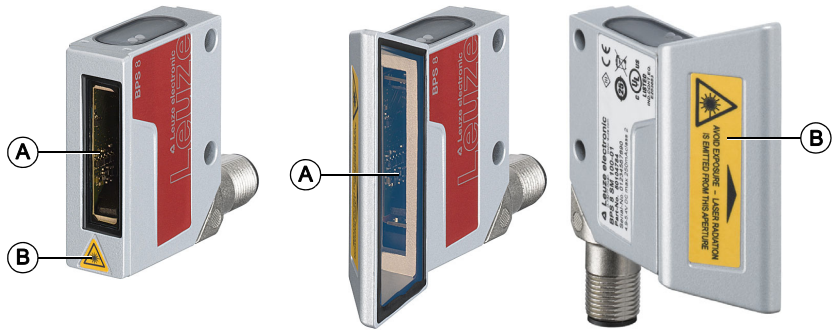

A Laser aperture
B Laser warning sign

Figure 2.1: Laser apertures, laser warning signs

Figure 2.2: Laser warning and information signs – supplied stick-on labels

3 Technical data of BPS 8

3.1 General specifications BPS 8

Optical data	
Light source	Laser diode
Beam deflection	Via rotating polygon wheel
Reading distance	See reading field (Figure 3.3 and Figure 3.4 on see page 15)
Optical window	Glass
Laser class	2 acc. to IEC 60825-1:2014
Wavelength	655 nm
Max. output power (peak)	1.7 mW
Impulse duration	< 420 µs
Measurement data	
Reproducible accuracy	±0.15 … ±1 mm depending on device version
Response time	26.6 ms (configurable)
Output time	3.3 ms
Basis for contouring error calculation	13.3 ms
Working range	BPS 8 SM 102: 80 … 140 mm BPS 8 SM 100: 60 … 120 mm
Max. traverse rate	4 m/s
Electrical data	
Operating voltage [a)]	BPS 8: 4.9 … 5.4 VDC With MA 8…: 10 … 30 VDC
Power consumption	BPS 8: 1.5 W With MA 8…: max. 2 W
Interface type	RS 232 directly or in combination with MA 8.1, RS 485 in combination with MA 8-01/MA 8-02
Service interface	RS 232 directly on the BPS 8, RS 232 via MA 8.1, RS 485 via MA 8-01/MA 8-02, with default data format: 9.6 kBit/s, 8 data bits, no parity, 1 stop bit
Switching input / switching output	1 switching input, 1 switching output, each is programmable, only in combination with MA 8…
Green LED	Device ready (power on)
Mechanical data	
Degree of protection	IP 67
Weight	70 g
Dimensions (H x W x D)	48 x 40.3 x 15 mm (BPS 8 SM 102…), 61 x 51 x 17.4 mm (BPS 8 SM 100…)
Housing	Diecast zinc

Environmental data	
Operating temperature range	0 °C … -40 °C
Storage temperature range	-20 °C … -60 °C
Air humidity	Max. 90 % rel. humidity, non-condensing
Vibration	IEC 60068-2-6, test Fc
Shock/continuous shock	IEC 60068-2-27, test Ea
Electromagnetic compatibility	EN 61000-6-2:2005+AC:2005, EN 61000-6-3:2007+A1:2011+AC:2012
Conformity	CE, CDRH
Certifications [1) b)]	UL 60950-1, CSA C22.2 No.60950-1
Bar code tape	
Max. length (measurement length)	10,000 m [c)]
Ambient temperature	-40 °C … +120 °C
Mech. properties	Scratch and wipe resistant, UV resistant, moisture resistant, partly chemical resistant

a) For UL applications: use is permitted exclusively in Class 2 circuits according to NEC

b) These sensors shall be used with UL Listed Cable assemblies rated 30 V, 0.5 A min, in the field installation, or equivalent (categories: CYJV/CYJV7 or PVVA/PVVA7)

c) Depends on the transmission protocol and on the configured resolution.

Table 3.1: General specifications

3.2 Dimensioned drawings

BPS 8 SM 102… with front beam exit

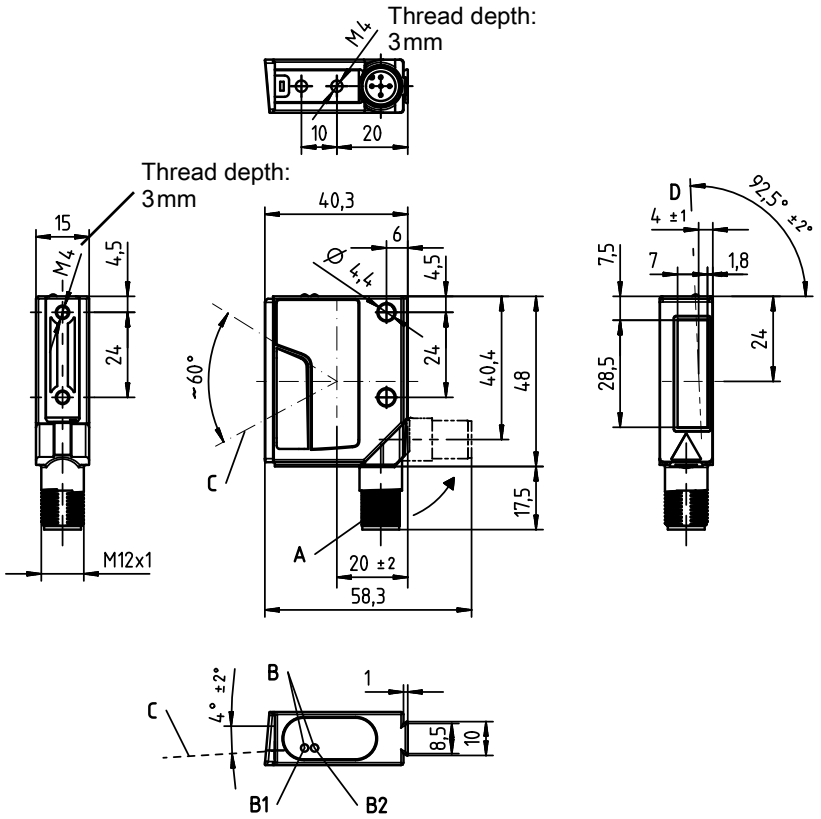

A Turning connector, turnable 90°
B Indicator diodes (**B1**: status LED, **B2**: decode LED)
C Scanning beam, divergence max. 5mm at 150 mm reading distance
D Optical axis

Figure 3.1: BPS 8 SM 102… dimensioned drawing

BPS 8 SM 100… with lateral beam exit

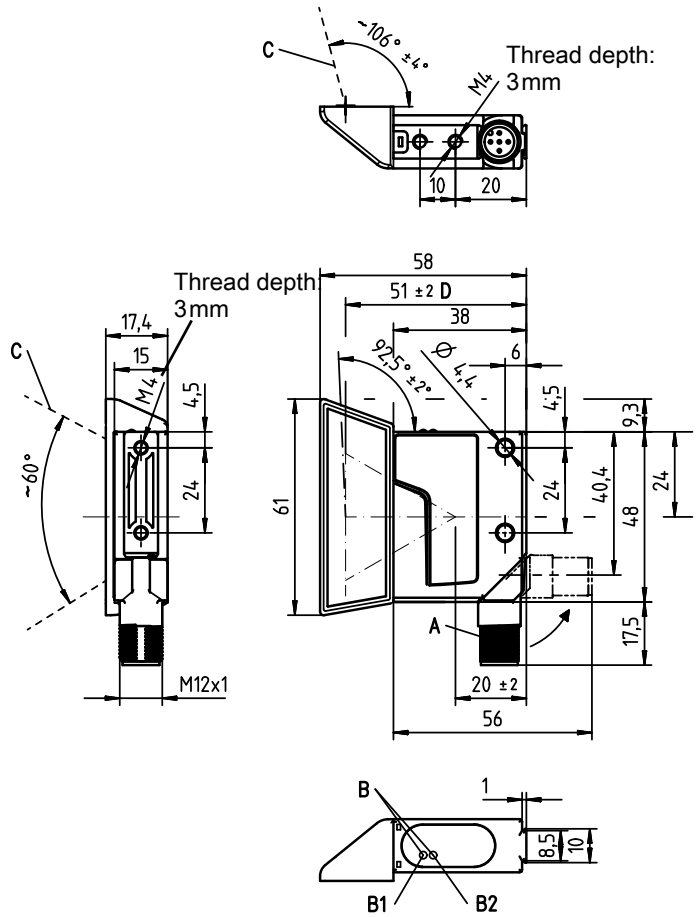

A Turning connector, turnable 90°
B Indicator LEDs (**B1**: status LED, **B2**: decode LED)
C Scanning beam, divergence max. 5mm at 150 mm reading distance
D Optical axis

Figure 3.2: BPS 8 SM 100-01 dimensioned drawing

3.3 Reading field curves

BPS 8 SM 102 with front beam exit

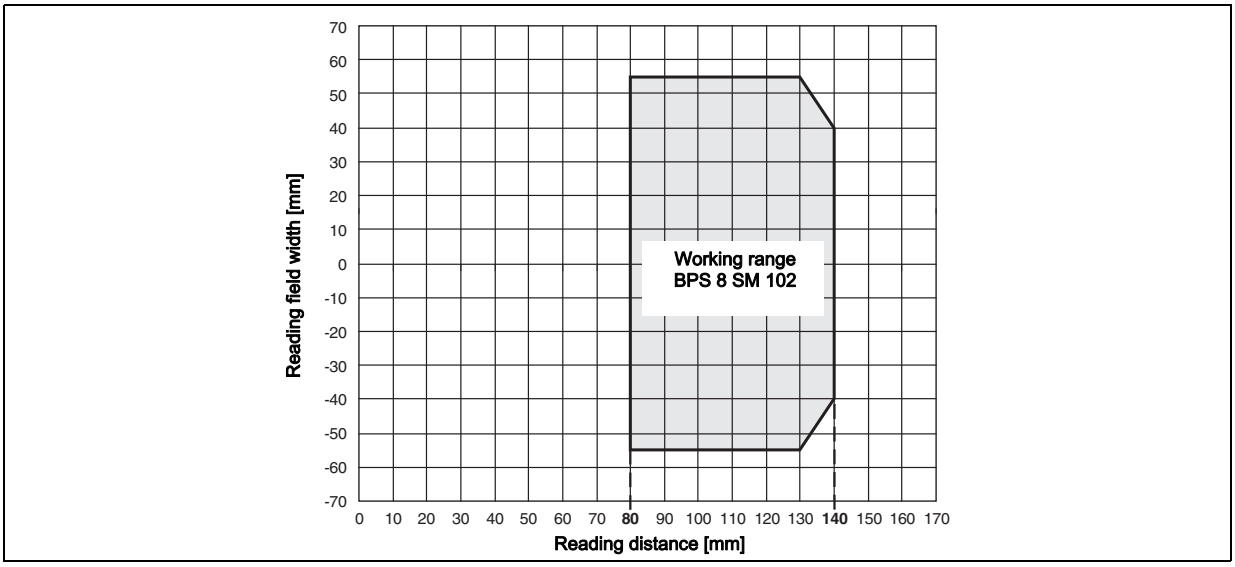

Figure 3.3: Reading field curve BPS 8 SM 102 with front beam exit

BPS 8 SM 100 with lateral beam exit

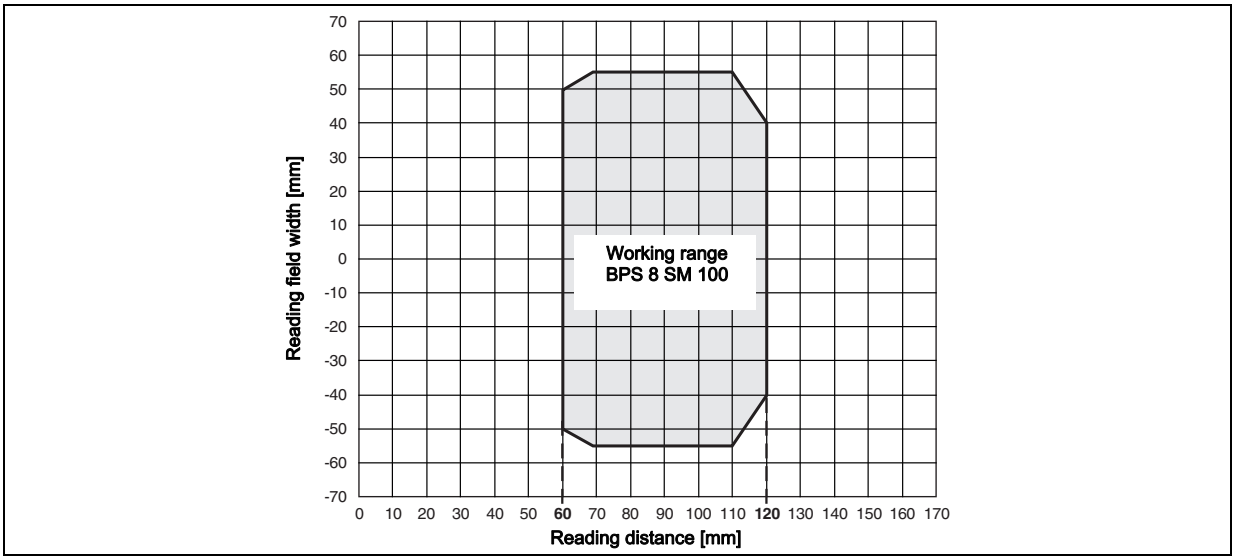

Figure 3.4: Reading field curve BPS 8 SM 100 with lateral beam exit

4 MA 8… / MA 2xxi connection units

Various connection units are available for convenient electrical connection:

- **MA 8.1** RS 232 interface Operating voltage 10 … 30 VDC
- **MA 8-01** RS 485 interface Operating voltage 10 … 30 VDC
- **MA 8-02** RS 485 interface Operating voltage 10 … 30 VDC
- **MA 2xxi** Different fieldbus systems Operating voltage 18 … 30 VDC

MA 8-01 and MA 8-02 differ in the resistor network for the termination of the RS 485 interface:

- **MA 8-01** 390 Ω / 220 Ω / 390 Ω
- **MA 8-02** 47 kΩ / 150 Ω / 47 kΩ

NOTE

You can find connection and interconnection cables of varying lengths in chapter 12.5 "Accessories – Cables" on page 109.

4.1 MA 8.1 connection unit

The MA 8.1 modular connection unit is an optional accessory for the connection of a BPS 8 to a DC voltage supply of 10 to 30 V DC. If offers the following advantages over the installation of the BPS 8 as a stand-alone device:

- M12 socket for switching input and switching output
- M12 connector for RS 232 interface and voltage supply 24 VDC
- M12 socket for connection of the BPS 8

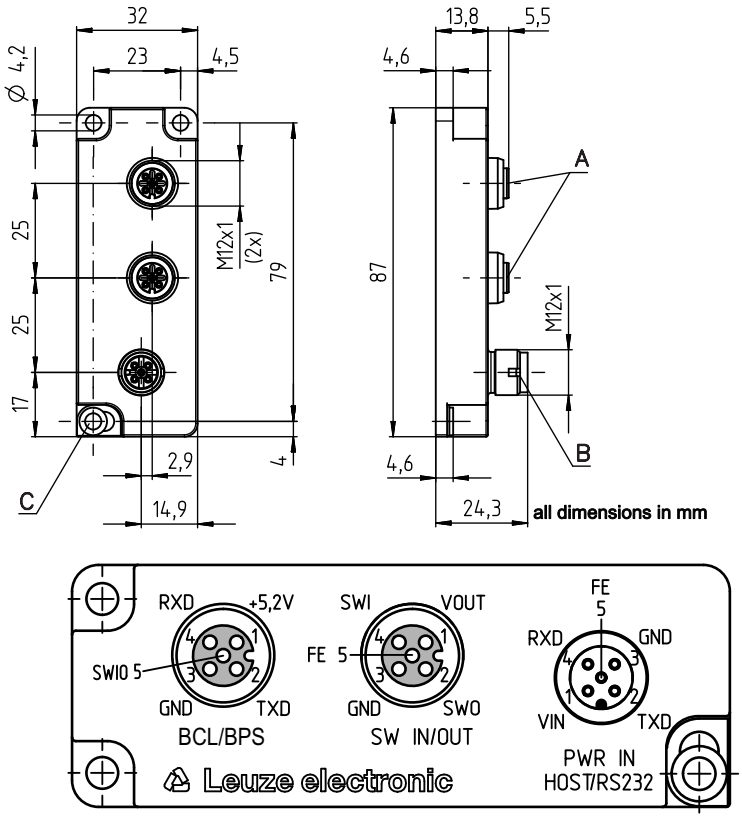

A M12 socket, 5-pin, A-coded
B M12 connector, 5-pin, A-coded
C FE connection

Figure 4.1: Dimensioned drawing and pin assignment of the MA 8.1 connection unit

4.2 MA 8-01 / MA 8-02 connection unit

The modular connection unit is an optional accessory when connecting a BPS 8 to an RS 485 interface. The RS 485 interface, the switching input and the switching output are all connected to the MA 8-01/MA 8-02. It also supplies voltage to the BPS 8. The MA 8-01/MA 8-02 connection unit offers the following advantages over the installation of the BPS 8 as a stand-alone device:

- M12 socket for switching input and switching output
- M12 connector for RS 485 interface and voltage supply 24 VDC
- M12 socket for connection of the BPS 8

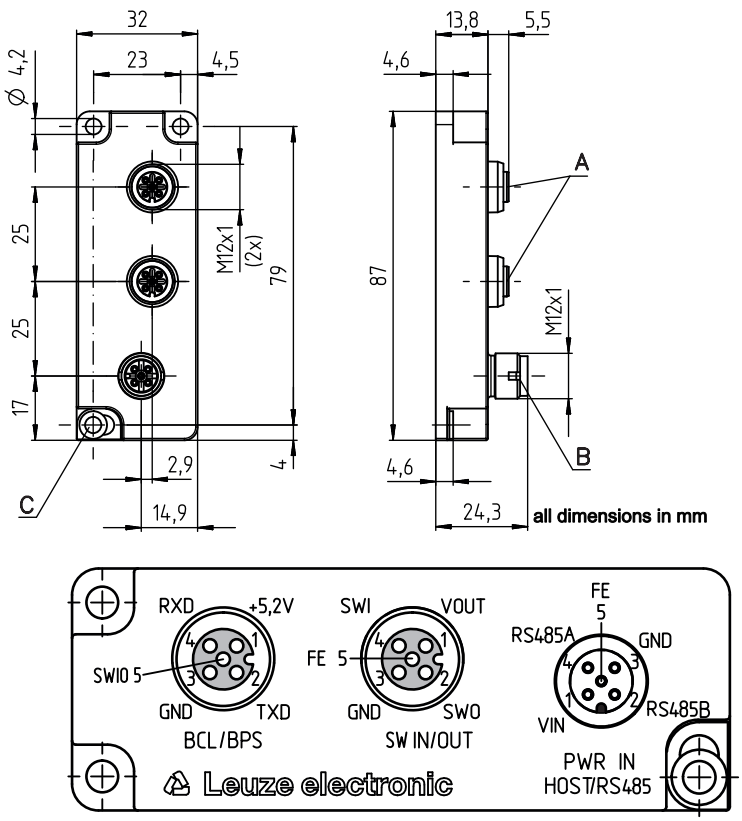

A M12 socket, 5-pin, A-coded
B M12 connector, 5-pin, A-coded
C FE connection

Figure 4.2: Dimensioned drawing and pin assignment of the MA 8-01/MA 8-02 connection unit

4.3 MA 2xxi connection unit

The MA 2xxi modular connection unit is a gateway for the BPS 8 for connecting to various fieldbus systems and Ethernet networks.

In this setup, the data of the BPS 8 is transmitted through the RS 232 interface to the MA 2xxi and implemented there on the relevant fieldbus/Ethernet systems.

The following gateways are available for the BPS 8:

- MA 204i PROFIBUS DP
- MA 208i Ethernet
- MA 248i PROFINET
- MA 235i CANopen
- MA 238i EtherCAT
- MA 255i DeviceNet
- MA 258i Ethernet/IP

You can find more detailed information on the gateways at **www.leuze.com**.

5 Bar code tape

5.1 General information

The bar code tape is available in different variants:

- **BCB G40 ...** bar code tape with 40 mm grid, Code128 with character set C, increasing in increments of 4 (e.g., 000004, 000008, …)
- **BCB G30 ...** bar code tape with 30 mm grid, Code128 with character set C, increasing in increments of 3 (e.g., 000003, 000006, …)

CAUTION	
	Bar code tape! BPS 8 is set for bar code tape BCB G30 ... with a 30 mm grid by default. The BPS 8 can be configured for position measurement with a 40 mm bar code tape (BCB G40 ...) with the **BPS Configuration Tool**.

A bar code tape consists of a sequence of individual position bar codes in one of the two grids. Defined cut marks are provided for cutting the BCB.

The bar code tape is delivered on a roll. A roll contains up to 300 m of BCB. The BCB always starts with the lowest position value at the outside of the roll (this is the value ’000000’ for standard tapes). The BCB ends at the inside on the wrapping core with the largest position value. If more than 300 m of BCB is ordered, the total length is divided into rolls of 300 m.

NOTE	
	Special tapes are produced according to customer specifications. A special tape is characterized by the following features: • The initial value as well as the final value of the tape (dependent on the BCB G30 ... grid dimension) according to customer specifications. • Special tapes are printed below the bar code with the corresponding position value. • Tape heights are available in millimeter increments in the range from 20 mm to 140 mm. • The maximum tape length is 10,000 m, the maximum position value is 9999.99 m. • Special tapes longer than 300 m are delivered wound on multiple rolls. An entry wizard is available for special tapes on the Leuze website under the "BPS 8 - Accessories" heading. The entry wizard provides support when entering the individual pieces of tape data and creates a query or order form with the correct part number and type designation.

NOTE	
	Only one BCB type per system! ↳ In a given system, use either only BCB G30 ... with 30 mm grid or only BCB G40 ... with 40 mm grid. If different BCB grids are used in one system, the BPS cannot ensure an exact position determination.

BCB G30 ... bar code tape with 30 mm grid

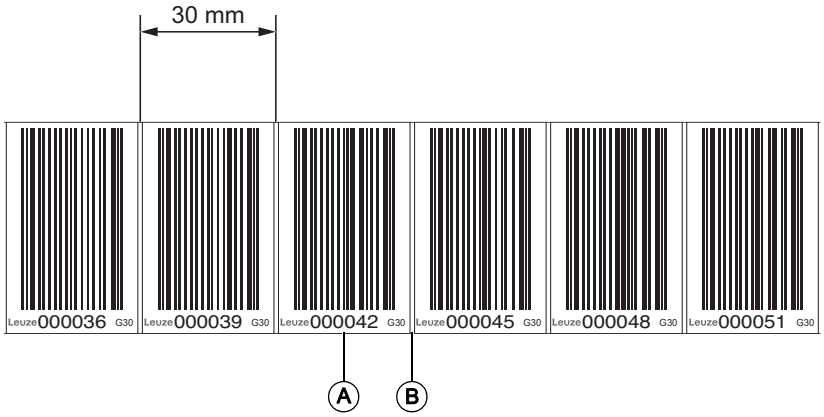

A Position bar code with position value
B Cut mark

Figure 5.1: BCB G30 ... bar code tape with 30 mm grid

Standard BCB G30 ... bar code tapes are available in various length increments in the following heights:

- 47 mm
- 25 mm

Special BCB G30 ... tapes are available in mm height increments between 20 and 140 mm.

An entry wizard is available for special tapes on the Leuze website under devices "BPS 8 - Accessories". The entry wizard provides support when entering the individual pieces of tape data and creates a query or order form.

NOTE	
	With a standard bar code tape and repair tape with 30 mm grid, the printed numerical values are divisible by three without a remainder.

5.2 BCB G30 ... control bar code MVS

With the help of control bar codes that are affixed on top of the bar code tape at appropriate positions, functions in the BPS can be activated or deactivated, e.g. precise, reproducible switching between different BCB value ranges at switches.

Code type Code128 with character set B is used for the control bar code.

The **MVS** label is a control bar code for the precise, reproducible switching of position values from a preceding to a subsequent bar code tape. The subsequent bar code tape begins with another, new value range.

The changeover between the different value ranges of the two BCBs occurs independent of the direction of travel in the center of the MVS control bar code.

NOTE	
	If, upon reaching the the center of the MVS control bar code, the BPS 8 does not detect the value range of the subsequent BCB in the scanning beam, the position value of the first BCB section is still output for half of the label width starting from the center of the MVS control bar code.

Arrangement of the control bar codes

The control bar code is attached in such a way that it replaces one position bar code or seamlessly connects two bar code tapes with different value ranges to one another (see figure 5.2).

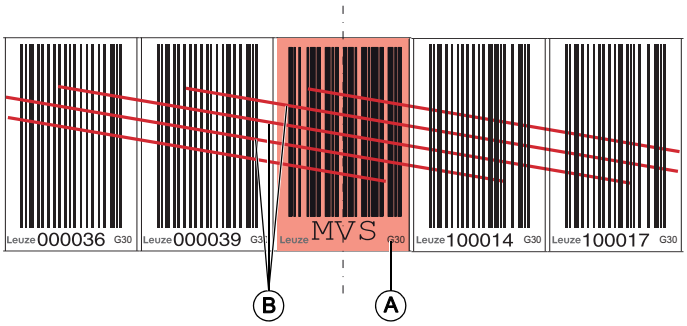

A Control bar code
B The control bar code is decoded in the marked scans

Figure 5.2: Arrangement of the MVS control bar code

NOTE	
	Distance between two control bar codes! ↳ Make certain that there is only one control bar code (or marker bar code) in the scanning beam at a time. The minimum distance between two control bar codes is determined by the distance between the BPS 8 and bar code tape and the resulting length of the scanning beam.

The control bar codes are simply affixed over the existing bar code tape.

NOTE	
	Grid dimension of control/marker bar code! The control/marker bar code must match the selected grid of the bar code tape used. If a 30 mm grid is used (default), then the control/marker bar code must also be inserted in the 30 mm grid. With a 40 mm grid, a 40 mm control/marker bar code is used.

NOTE	
	Keep the gap between the BCBs that are switched between as small as possible.

A Control bar code perfectly affixed on the bar code tape
B Control bar code at small gap between two bar code tapes

Figure 5.3: Correct positioning of the control bar code

NOTE	
	Gaps in bar code tape! ↳ Avoid polished and high-gloss surfaces. ↳ Keep the gaps between the two bar code tapes and the control bar code as small as possible.

BCB G30 ... control bar code MVS

With the MVS control bar code, there is precise and reproducible switching between two bar code tapes with different value ranges.

NOTE	
	1 m difference in the bar code position values for correct measurement value switching! ↳ For different BCB value ranges, make certain that the position value has a value distance of minimum 1 m between the preceding position bar code (before the control bar code) and the subsequent position bar code (after the control bar code). Example: If the last position bar code on the BCB G30 ... before the control bar code is ’075120’, the following position bar code on the BCB G30 ... after the control bar code must be at least ’075222’ (printed values BCB G30 ... in cm). If the minimum value range distance of 1 m between the bar code values is not maintained, position determination may be faulty.

- The end of the preceding bar code tape and the start of the subsequent bar code tape can end and begin, respectively, with completely different position bar codes.
- BCB changeover by means of a control bar code always occurs at the same position, i.e., it serves to change from the preceding tape to the subsequent tape and vice versa.
- If the center of BPS 8 reaches the center of the MVS control bar code at the transition position, the value range of the subsequent BCB is switched to – provided the BPS 8 has the next position bar code in the scanning beamsee figure 5.4.
  This means the output position value is always uniquely assigned to the preceding or subsequent BCB.

NOTE
If, upon reaching the center of the MVS control bar code, the BPS 8 does not detect the value range of the subsequent BCB in the scanning beam, the position value of the first BCB section is still output for half of the label width starting from the center of the MVS control bar code.

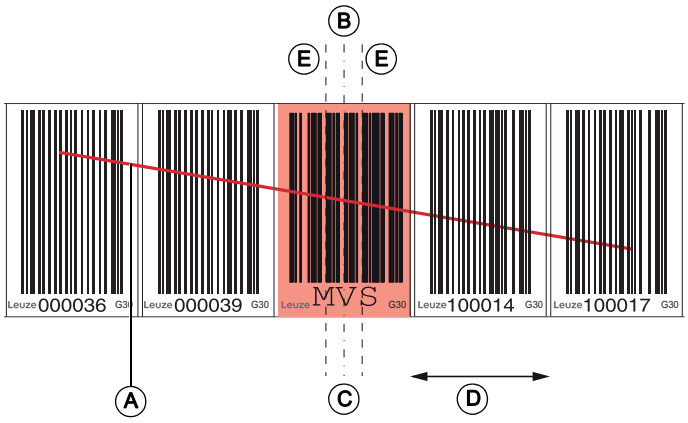

A Scanning beam
B Control bar code center
C BPS 8 center
D Direction of movement
E MVS hysteresis range

Figure 5.4: Measurement range changeover via MVS control bar code

NOTE
Measurement range changeover! The measurement range changeover from the preceding to the subsequent BCB occurs when the center of the BPS 8 (**C** in Figure 5.4) is opposite the center of the control bar code (**B** in Figure 5.4).

NOTE
Hysteresis for measurement range changeover! If a measurement range changeover occurs in the center of the MVS control bar code to the subsequent BCB, a hysteresis range of ± 2mm (**E** in Figure 5.4) is activated. If the direction of movement is reversed within this hysteresis range, a measurement range changeover occurs to the preceding BCB 15 mm after the center of the MVS control bar code. Within this range of 15 mm, the position values are calculated from the subsequent BCB.

5.3 Marker bar codes

Marker bar codes, which are affixed at the appropriate locations via a position bar code, can be used to trigger various functions in the superior control. The BPS 8 detects the defined marker bar codes in the scanning beam, decodes them, and makes them available to the control.

NOTE
Distance between two marker bar codes! ↳ Make certain that there is only one marker bar code (or control bar code) in the scanning beam at a time. The minimum distance between two marker bar codes is determined by the distance between the BPS 8 and bar code tape and the resulting length of the scanning beam.

Definition of the marker bar code

The following combinations of letters and numbers may be used as marker labels:

- AA1
- BB1
- CC1
- DD1
- EE1
- FF1
- GG1

Marker labels are implemented as follows:

- Color red
- Height 47 mm
- In grid dimension 30 mm (BCB G30 ... ML)
- Code 128 B
- Marker labels are individual labels and are supplied in a packaging unit containing 10 pieces.

Arrangement for using the marker bar code with position bar codes

The marker bar code must be attached to the bar code tape aligned with the grid of the actual coding. A position bar code should be detected by the scanning beam before and after the marker bar code.

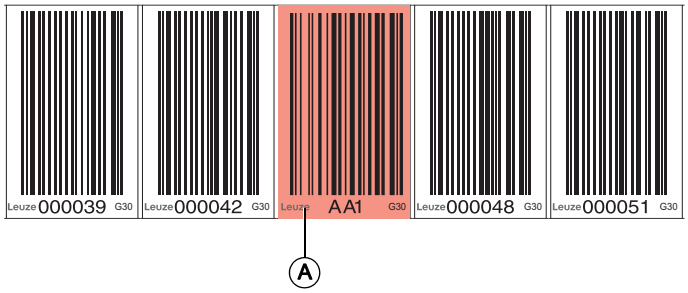

A Marker bar code

Figure 5.5: System arrangement of marker bar code

Arrangement for using the marker bar code without position bar codes

The marker bar code must be positioned within the BPS 8's detection range.

NOTE	
	If position bar codes are arranged in the detection area of the scanning beam before and after the marker bar code, the position calculation is continued without interruption.

5.4 Technical data of the BCB G30 ... bar code tape

Dimensions	
Grid	30mm
Standard height	47mm / 25 mm
Standard lengths	0 … 5m, 0 … 10m, 0 … 20m, …, 0 … 150m, 0 … 200 m
Special heights	20 mm - 140 mm in 1 mm increments
Special lengths	Up to a length of 9999.99 m
Tape tolerance	±1 mm per meter
Structure	
Surface protection	Polyester, matt
Base material	Polyester film, affixed without silicone
Adhesive	Acrylate adhesive
Strength of adhesive	0.1mm
Environmental data	
Processing temperature received	0 °C … -45 °C
Temperature resistance	-40°C … +120°C
Dimensional stability	No shrinkage, tested according to DIN 30646
Curing	Final curing after 72h, the BPS 8 can detect the position immediately after the BCB is affixed
Weathering resistance	UV light, humidity, salt spray fog (150 h/5 %)
Chemical resistance (checked at 23 °C over 24 h)	Transformer oil, diesel oil, white spirit, heptane, ethylene glycol (1:1)
Behavior in fire	Self-extinguishing after 15 s, does not drip
Surface	Grease-free, dry, clean, smooth
Mechanical properties	Scratch and wipe resistant, UV resistant, moisture resistant, partly chemical resistant

Table 5.1: Technical data of the BCB G30 ... bar code tape

5.5 Dimensioned drawing for position, control and marker bar codes

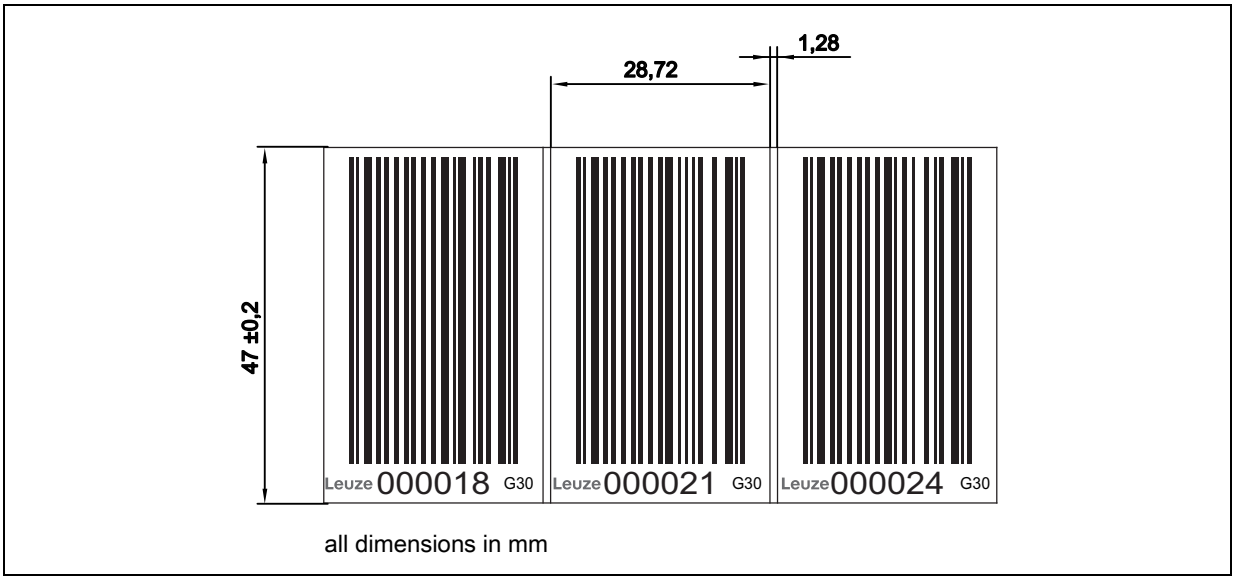

Figure 5.6: Dimensioned drawing for position, control and marker bar codes in a 30 mm grid

6 Mounting and installation

6.1 Mounting the bar code tape

6.1.1 Installation and application remarks

NOTE

BCB mounting

- When processing BCBs, observe the specified processing temperatures.

  When processing BCBs in cold storage facilities, the BCB must be affixed before cooling the storage facility. However, if it should be necessary to affix the BCB at temperatures outside of the specified processing temperature, assure that the bonding surface as well as the BCB are at the processing temperature.
- Avoid dirt deposits on the BCB.

  If possible, affix the BCB vertically. If possible, affix the BCB below an overhead covering.

  The BCB must never be continuously cleaned by on-board cleaning devices such as brushes or sponges. Permanent on-board cleaning devices polish the BCB and give it a glossy finish. The reading quality deteriorates as a result.
- After affixing the BCBs, make certain that there are no polished, high-gloss surfaces in the scanning beam (e.g., glossy metal at gaps between the individual BCBs), as the measurement quality of the BPS may be impaired.

  Affix the BCBs to a diffusely reflective support, e.g., a painted surface.
- Avoid sources of extraneous light and reflections on the BCB.

  Ensure that neither strong sources of extraneous light nor reflections of the support on which the BCB is affixed occur in the vicinity of the BPS scanning beam.
- Affix the BCB over expansion joints up to a width of several millimeters.

  The BCB must not be interrupted at this location.
- Cover protruding screw heads with the BCB.
- Ensure that the BCB is affixed without tension.

  The BCB is a plastic tape that can be stretched by strong mechanical tension. Excessive mechanical stretching results in lengthening of the tape and distortion of the position values.

NOTE

BCB application

- Make certain that the BCB is located in the scanning beam of the BPS over the entire traversing path.

  The BPS can determine the position on BCBs with arbitrary orientation.
- Bar code tapes with different value ranges may not directly follow one another.

  In the case of different value ranges, a gap of at least 1 m must be maintained between the last position bar code value of the preceding BCB and the first position bar code value of the subsequent BCB (see see chapter 5.2).
- For MVS control bar codes (see see chapter 5.2), the minimum distance of 1 m between the printed value of the last position bar code before the control bar code and the printed value of the first position bar code after the control bar code must be maintained (BCB G30 ... printed values in cm).
- In the case of bar code tapes with different value ranges, both BCBs must be BCB G30 ...-type in a 30 mm grid (see see chapter 5.1).
- When using the position bar code with the value ’000000’, negative values are output for position measurements to the left of the label.

6.1.2 Cutting bar code tapes

NOTE

Bridging gaps!

Any mechanical gaps may have to be bridged when affixing the bar code tape.

- Smaller gaps (up to around 10mm) can be covered with the tape.
- For wider gaps we recommend cutting out the label over the gap at the marked cut mark.
- In chemically aggressive environments, the bar code tape should be cut out over mechanical gaps. Since the tape is highly resistant to chemical loads only on the front side, exposure of the adhesive side should be avoided.

If necessary, the BCB is cut at the indicated cut marks (see Figure 6.1).

A Cut mark

Figure 6.1: Cut mark on the bar code tape

If another BCB is to be affixed directly after the preceding BCB, the subsequent bar code value must differ from the preceding bar code value by at least 1 m (BCB G30 ... printed values in cm, see Figure 6.2).

A Preceding bar code tape
B Cut mark
C Subsequent bar code tape, value of the last bar code of the preceding bar code tape + 1 m

Figure 6.2: Cut bar code tape

NOTE

Use MVS (BCB G30 ... MVS) control bar code!

For this arrangement (Figure 6.2) using the MVS bar code is recommended.

With the MVS control bar code, a unique, reproducible switching point between the two different position bar codes is achieved, irrespective of the direction of travel.

Without the MVS control bar code, the switching point is subject to hysteresis in the event of alternating directions of travel (see chapter 5.2 "BCB G30 ... control bar code MVS").

If the bar code tape cannot be affixed without interruption, the tape-free gap should be wider than 300 mm. When passing over the gap, the scanning beam can therefore always only read the preceding or subsequent position bar code.

Make sure that when starting the bar code tape after the gap approx. 10 position bar codes are cut off, because there may otherwise be an output of the same position values before and after the gap.

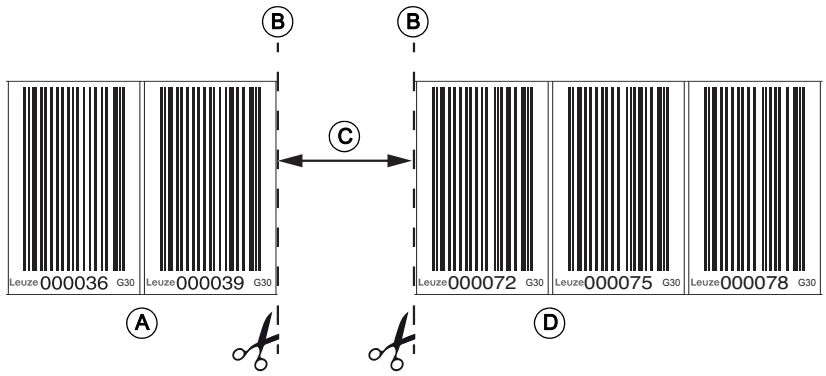

A Preceding bar code tape
B Cut mark
C Gap, at least 300 mm
D Subsequent bar code tape

Figure 6.3: Cut bar code tape

NOTE	
	No glossy gaps in the cut bar code tape! ↳ Ensure that there are matt, bright surfaces behind the gaps in the BCB. Polished, reflective, and high-gloss surfaces in the scanning beam may impair the measurement quality of the BPS.

6.1.3 Mounting the BCB

Mount the BCB as follows:

↳ Check the surface.

It must be flat, free of grease and dust, and be dry.

↳ Define a reference edge (e.g., metal edge of the busbar).

↳ Remove the backing and affix the BCB along the reference edge tension free.

↳ Secure the bar code tape to the mounting surface by pressing down with the palm of your hand.

When affixing, make certain that the BCB is free of folds and creases and that no air pockets form.

NOTE	
	When mounting, do not pull on the BCB! ↳ The BCB is a plastic tape that can be stretched by strong mechanical tension. The stretching results in lengthening of the tape and distortion of the position values on the BCB. ↳ While the BPS can still perform the position calculation in the event of distortions, the absolute measurement accuracy is no longer ensured in this case. If the values are taught using a teach-in process, stretching of the BCB is irrelevant.

NOTE	
	If a bar code tape was damaged, e.g., by falling parts, you can download a repair kit for the BCB from the Internet (see chapter 6.1.4 "BCB repair with repair kit"). Use the bar code tape created with the repair kit only temporarily as an emergency solution.

BCB mounting in horizontal curves

NOTE
Limited absolute measurement accuracy and reproducibility! ↳ Installing the BCB in bends impairs the absolute precision of the BPS, because the grid dimension can no longer be detected as 30 mm due to the optical distortion of the bar code.

↳ For horizontal curves, maintain a minimum bending radius of 300 mm (see figure 6.4).

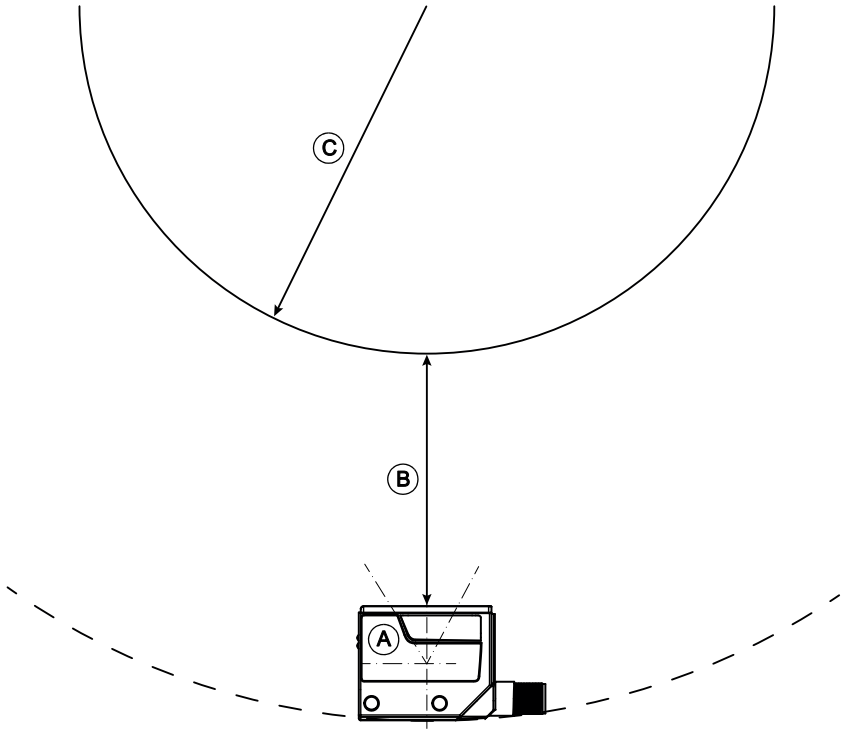

A BPS 8
B Reading distance
C Bar code tape radius, $R_{min.}$ = 300 mm

Figure 6.4: Mounting the bar code tape for use in horizontal curves

BCB mounting in vertical curves

NOTE
Limited absolute measurement accuracy and reproducibility! ↳ BCB mounting in curves decreases the absolute measurement accuracy of the BPS, since the distance between two bar codes is no longer exactly 30 mm. ↳ In areas where the BCB is fanned out around curves, limitations of the reproducibility must be expected.

↳ Only partially cut the BCB at the cut mark.

↳ Affix the BCB along the curve like a fan (see figure 6.5).

↳ Ensure that the BCB is affixed without mechanical tension.

NOTE
No glossy gaps in the bar code tape! ↳ Ensure that there are matt, bright surfaces behind the fanning in the BCB curves. Polished, reflective, and high-gloss surfaces in the scanning beam may impair the measurement quality of the BPS.

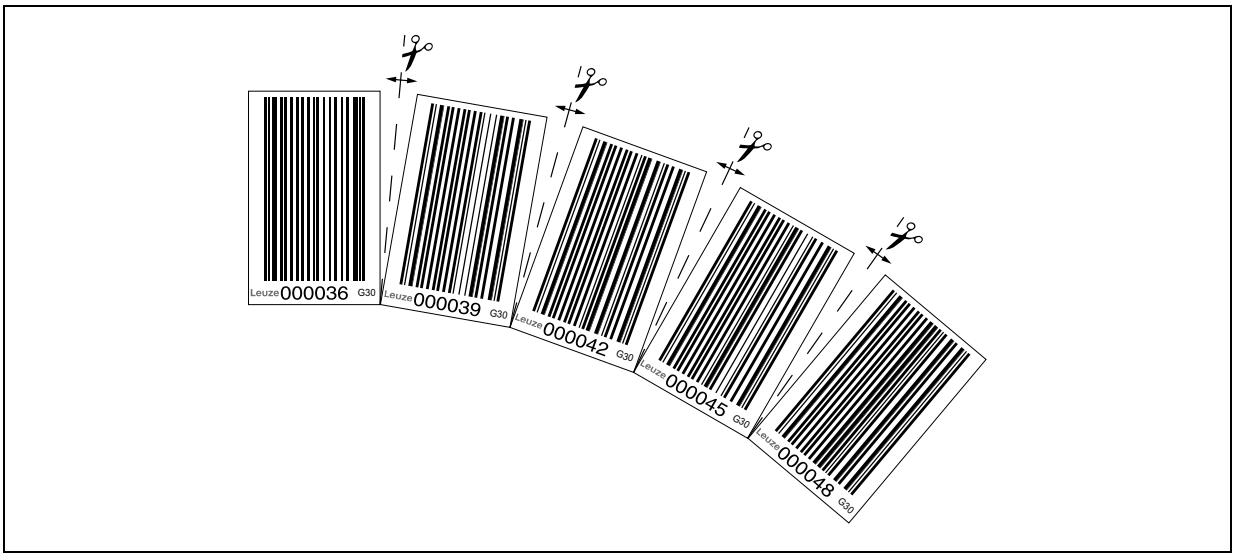

Figure 6.5: Preparing the bar code tape for use in vertical curves

6.1.4 BCB repair with repair kit

NOTE	
	Do not use the BCB repair kit on a permanent basis! ↳ Use the bar code tape created with the repair kit only temporarily as an emergency solution. The optical and mechanical properties of the self-printed bar code tape do not correspond to those of the original bar code tape. Self-printed bar code tape should not remain in the system on a permanent basis. ↳ An entry wizard is available for repair tapes on the Leuze website under devices "BPS 8 - Accessories". The entry wizard provides support when entering the individual pieces of tape data and creates a query or order form for the desired repair tape. ↳ Repair tapes (BCB G30 ... RK) are available in tape heights of 47 mm and 25 mm. ↳ Repair tapes are available up to a maximum length of 5 m per repair tape. ↳ Repair tapes longer than 5 must be ordered as special tapes in the entry wizard.

If a bar code tape was damaged, e.g., by falling parts, you can download a repair kit for the BCB from the Internet.

www.leuze.com > Products > Measuring Sensors > Sensors for Positioning > Bar code positioning systems > BPS 8 > Enter search term or use filter function > Tab Downloads > Repair kit.

NOTE	
	In the repair kit files, you will find all position values with 30 mm grid. The repair kit PDF files each contain a value range of 500 m. The following value ranges are available: • 0 … 500 m • 500 … 1000 m • 1000 … 1500 m etc. up to • 9500 … 9999 m You can find the repair kit PDF files with position bar codes in a 40 mm grid in the download area of our BPS 300i bar code positioning systems.

Replacing a section of defective bar code tape

↳ Determine the values of the defective position bar codes using the value printed in plain text. If this value is no longer legible, the position value of the next position bar code can be determined from the last legible value in the continuing 3 cm grid dimension.

- Download the required repair kit PDF file, look for the page(s) with the required position bar codes and print them out.
- Trim the required position bar codes and affix them over the defective positions of the bar code tape.

NOTE	
	Printing coding Select only those pages that are actually required. Change the printer settings so that the bar code is not distorted. Check the print results and measure the distance between two bar codes (see figure 6.6) Cut the code strips and arrange them next to one another. The code content must always increase or decrease each time by the value of 3. Check that the printed values increase by 3.

Figure 6.6: Checking the print results of the repair kit (30 mm grid)

6.2 Mounting the BPS 8

There are different types of mounting arrangements for the BPS 8:

1. Directly, using the 2 through holes in the housing.
2. Using the **BT 8-01** mounting device on the through holes.
3. Using the **BT 8-0** mounting device on the dovetail.

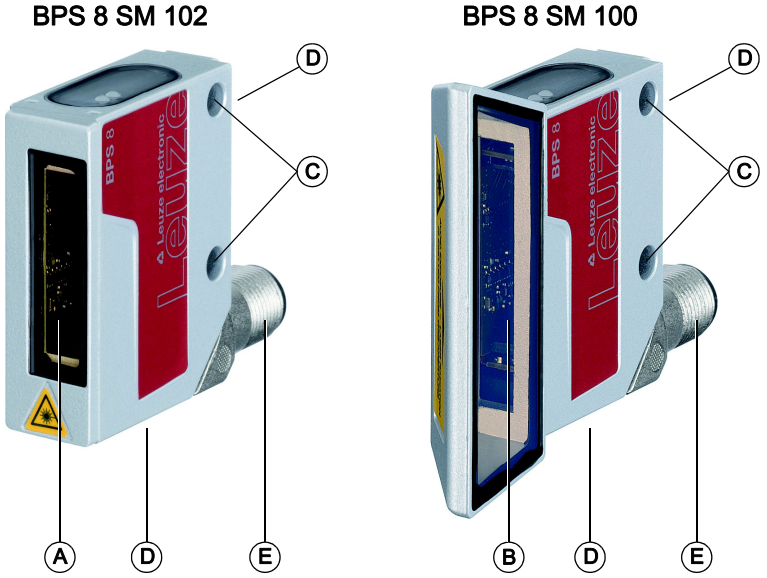

A Reading window with front beam exit
B Reading window with lateral beam exit
C Ø 4.4 mm through holes for mounting
D Dovetails and two M4 mounting threads at the rear and bottom side of the device
E M12 connector, turnable

Figure 6.7: BPS 8 mounting options

CAUTION

For the position calculation, the scanning beam of the BPS 8 must be incident on the bar code tape without interruption. Ensure that the scanning beam is always incident on the BCB when the system is moving.

BPS 8 system components to be attached/installed

Figure 6.8: BPS 8 system components

6.2.1 BT 8-01 mounting device

The BT 8-01 mounting device is available for mounting the BPS 8 using the 2 through holes. It is intended for attachment via two M4 screws. For order guide, please refer to see chapter 12.6 on see page 90.

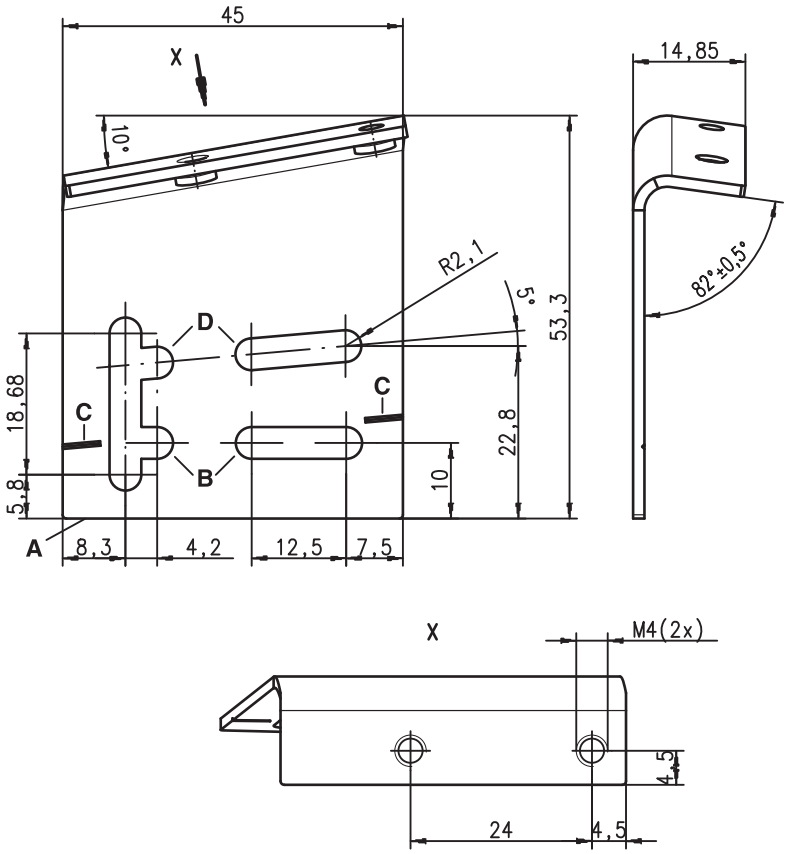

A Reference plane for a BCB height of 47mm
B Fastening holes for a BCB height of 47mm
C Reference plane for a BCB height of 30mm and 25mm
D Fastening holes for a BCB height of 30mm and 25mm

Figure 6.9: BT 8-01 mounting device

6.2.2 BT 8-0 mounting device

The BT 8-0 mounting device is available to you for the clamp-mounting of the BPS 8 to the dovetail on the rear of the device and the bottom of the device. It is intended for fastening at system via two M4 screws. For order guide, please refer to see chapter 12.6 on see page 90.

NOTE	
	The angles of inclination required for device arrangement are not integrated with this mounting device, in contrast with the BT 8-01.

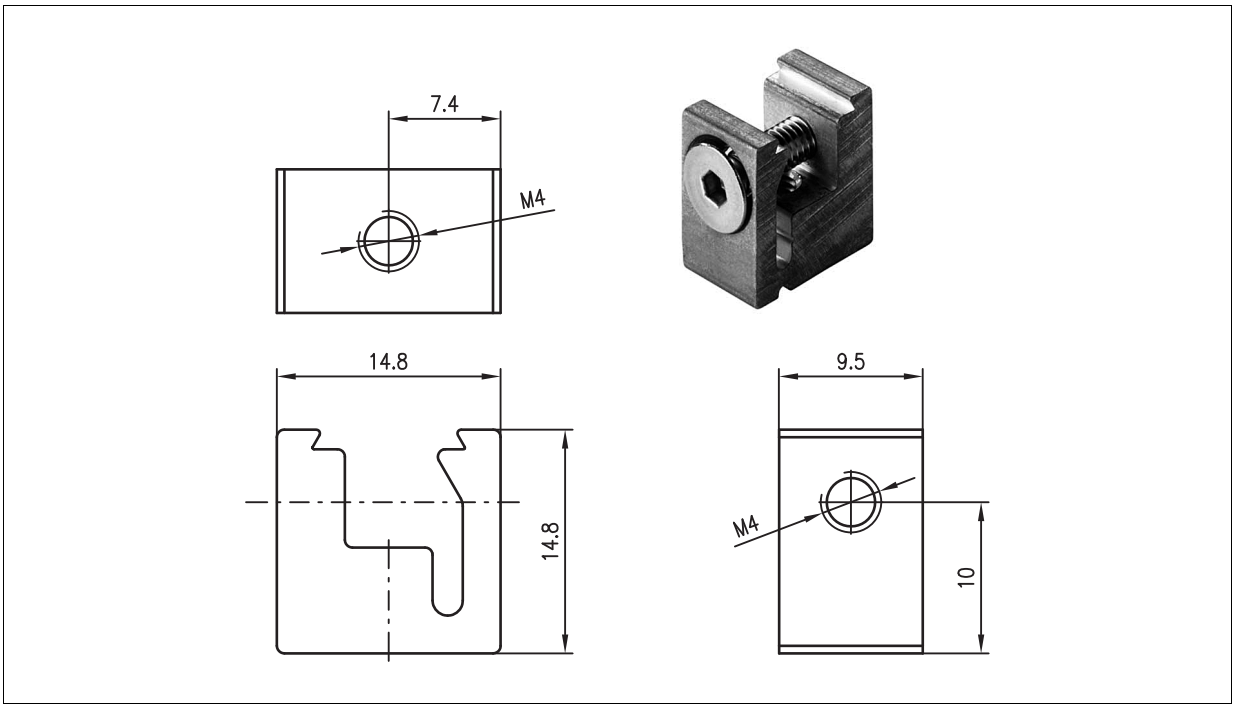

Figure 6.10: BT 8-0 mounting device

6.3 Device arrangement

Selecting a mounting location

	NOTE
	Select the mounting location ↳ The distance between BPS and bar code tape must be in the working range of the reading field curve. ↳ Make certain that the required environmental conditions (humidity, temperature, ambient light) are maintained. ↳ The scanning beam of the BPS should cover three or more position bar codes. ↳ Make certain that the exit window does not become soiled, e.g., by leaking liquids, abrasion from cardboard packaging or residues from packaging material. ↳ BPS mounting outdoors: Mount the BPS in a way which provides maximum thermal isolation. Mount the BPS so that it is protected from airflow, e.g., in a protective housing. In the event of frost on the bar code tape, no position values can be output. In the event of direct sunlight on the bar code tape or the BPS 8 during the reading process, no position value can be output. The BPS 8 is designed for operating temperatures of 0°C–40°C. Beyond those operating temperatures, one can expect no position values to be output. ↳ Mounting the BPS in a protective housing: When installing the BPS in a protective housing, ensure that the scanning beam can exit the protective housing without obstruction. ↳ Make certain that the working range determined from the scanning curve is adhered to at all locations where a position determination is to be made. ↳ Ensure that the scanning beam is always incident on the BCB when the system is moving. For the position calculation, the scanning beam of the BPS must be incident on the BCB without interruption. For the best functionality, the BPS must be guided parallel to the BCB. It is not permitted to move outside of the approved working range of the BPS (see chapter 3.3 "Reading field curves" on see page 15) while the system is in motion. ↳ Make certain that there is only one control or marker bar code in the scanning beam at a time. The minimum distance between two control bar codes is determined by the distance between the BPS and bar code tape and the resulting length of the scanning beam.

In order to select the right mounting location, several factors must be considered:

- The working range must be adhered to at all areas at which a position determination is to be made.
- The BPS should be mounted at an angle of 10° (depending on the tape height, see note on see page 36) in the horizontal axis relative to the bar code tape to ensure continued reliable positioning results even in the event of soiling of the bar code tape.
- On the BPS 8, the beam is not emitted perpendicular to the cover of the housing, but with an angle of about 4°±2° towards the bottom. To achieve a total pitch greater than/equal to 10°, the mounting bracket BT 8-01 has an angle of about 8°±0.5°. This angle must not fall below this value. A total reflection of the scanning beam on the bar code tape is thus prevented. With the angles integrated into the BT 8-01, the BPS 8 can be mounted in parallel to the bar code tape in the reading distance required.

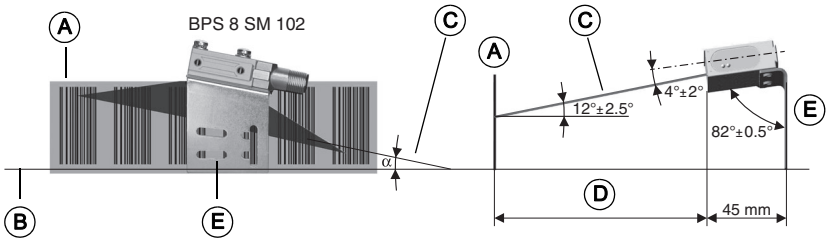

A Bar code tape
B Reference plane
C Pitch of scanning beam:
α = 10° for a tape height of 47 mm
α = 5° for a tape height of 30 mm or 25 mm
D Reading distance
E BT 8-01 mounting bracket

Figure 6.11: Beam exit and device arrangement of the BPS 8 SM 102

NOTE

Angle of inclination!

For the mounting, an angle of inclination of

- 10° for a tape height of 47 mm,
- 5° for a tape height of 30 mm or 25 mm

must be factored in the vertical axis and the working range of the reading field curve.

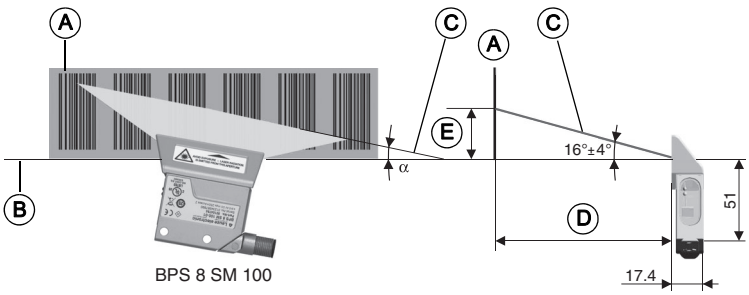

D	60	70	80	90	100	110	120
E	16	19	21	24	27	29	32

A Bar code tape
B Reference plane
C Pitch of scanning beam:
α = 10° for a tape height of 47 mm
α = 5° for a tape height of 30 mm or 25 mm
D Reading distance
E Height

Figure 6.12: Beam exit and device arrangement of the BPS 8 SM 100

NOTE	
	↳ The BPS 8 has to be mounted in such a way that • the scanning beam is incident on the bar code tape without interruption and as described in Figure 6.11 and Figure 6.12. • the BPS is guided parallel to the tape. • the permitted working range is not exited.

NOTE	
	For further information on mounting the bar code tape, please refer to see chapter 6.1 on see page 26.

7 Electrical connection

7.1 Safety notices for the electrical connection

The BPS 8 is connected via KD(S) S-M12-5A… M12 cables.

The corresponding mating connectors and ready-made cables are available as accessories for all connections. For additional information, refer to see chapter 12.5 starting on see page 90.

CAUTION

Safety notices!

- Connection of the device and cleaning must only be carried out by a qualified electrician.
- If faults cannot be cleared, the device should be switched off and protected against accidental use.
- Before connecting the device, be sure that the supply voltage agrees with the value printed on the respective name plate of the BPS 8.

  The power supply unit for the generation of the supply voltage for the BPS 8 and the respective connection units must have a secure electrical insulation through double insulation and safety transformers according to EN 60742 (corresponds to IEC 60742).
- Ensure the device is correctly earthed. Unimpaired operation is only guaranteed when the functional earth is connected properly.

CAUTION

Degree of protection IP 67!

Degree of protection IP 67 is achieved only if the connectors and caps are screwed into place!

7.2 Electrical connection BPS 8

7.2.1 BPS 8 - PWR IN - Voltage supply, RS 232, Switching input/output

PWR IN (5-pin connector, A-coded)			
	Pin	Name	Comment
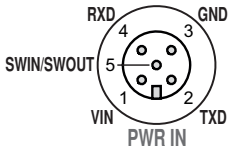 M12 connector (A-coded)	1	VIN	Positive supply voltage: +4.9 … +5.4VDC
	2	TXD	RS 232 transmission line
	3	GND	Supply voltage: 0VDC
	4	RXD	RS 232 receiving line
	5	SWIN/ SWOUT	Configurable switching input/output
	Thread	FE	Functional earth (housing)

Figure 7.1: BPS 8 - Pin assignment PWR IN

NOTE

The switching input/switching output are programmed via the parameters in the configuration software **BPS Configuration Tool** in the tabs Switching input and Switching output. For more information see also see chapter 8.5.4 and see chapter 8.5.5, see page 59 et seq.

CAUTION

Degree of protection IP 67!

Degree of protection IP 67 is achieved only if the connectors and caps are screwed into place!

Connecting the functional earth FE

CAUTION	
	Connect functional earth! ↳ Ensure that the functional earth (FE) is connected correctly. Fault-free operation is only guaranteed if the functional earth is connected properly.

- **BPS 8 with cable (option) and open cable end**:
  - Use shielded cables (see chapter 12.5 "Accessories – Cables").
  - Connect the shield in the switch cabinet to **FE** (functional earth).
  - The BPS 8 is usually connected to an earthed steel structure (**PE**). To prevent compensating currents, **FE** and **PE** must be configured for potential equalization.
- **BPS 8 connected via MA 8…**:
  - Use shielded cables (see chapter 12.5 "Accessories – Cables").
  - Connect PIN 5 of MA 8 PWR connection cable to **FE**.
  - The BPS 8 is usually connected to an earthed steel structure (**PE**). To prevent compensating currents, **FE** and **PE** must be configured for potential equalization.

Cable lengths and shielding

The following maximum cable lengths and shielding types must be observed:

Connection	Interface	Max. cable length	Shielding
BPS 8 - Service	RS 232	10 m	Absolutely required, sheath of a shielded line
BPS 8/MA 8… - Host	RS 485	25 m	Absolutely required, shielded
Switching input		10 m	Not necessary
Switching output		10 m	Not necessary

7.3 Electrical connection via connection unit MA 8.1

7.3.1 Electrical connection MA 8.1

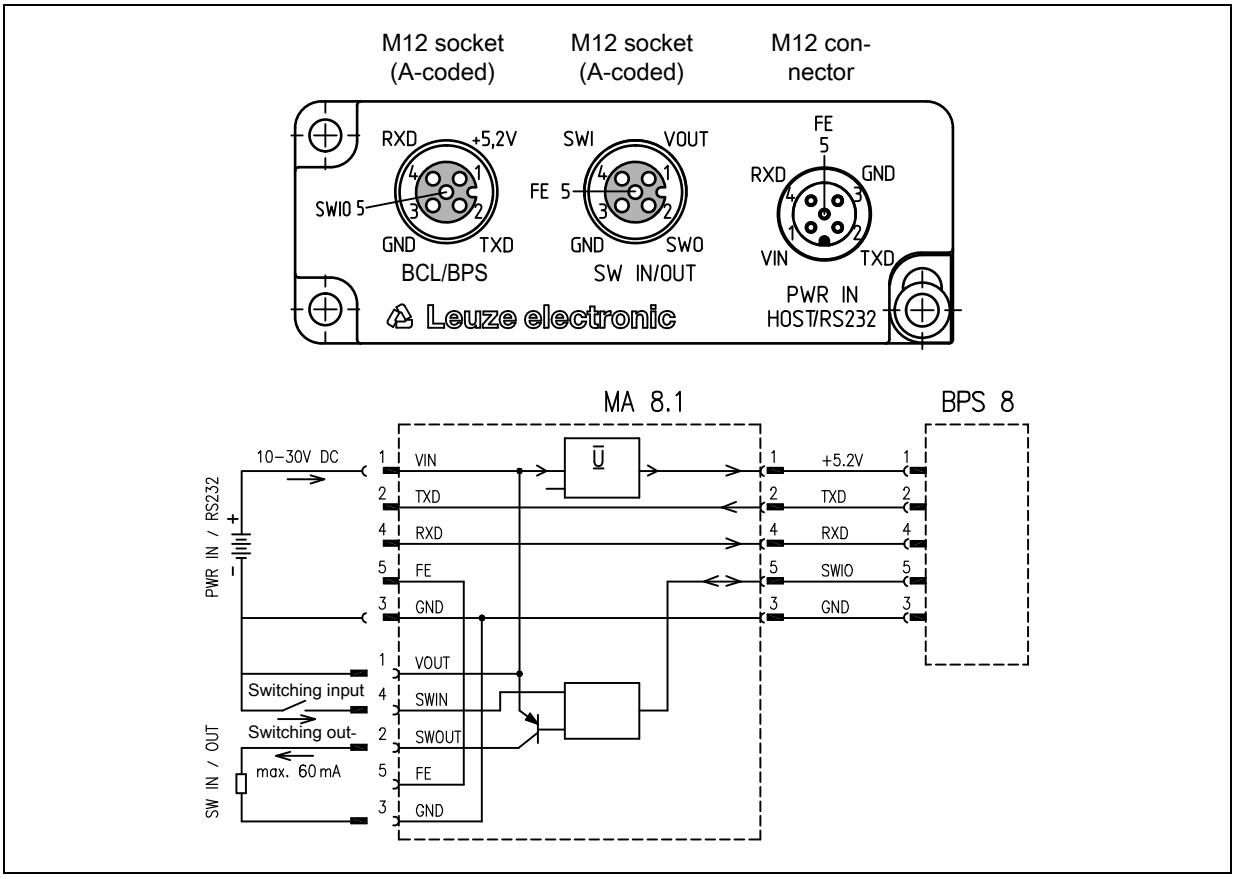

Figure 7.2: Electrical connection MA 8.1

7.3.2 PWR IN HOST/RS 232 connector – voltage supply and RS 232

PWR IN HOST/RS 232 (5-pin connector, A-coded)			
	Pin	**Name**	**Comment**
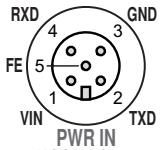 M12 connector (A-coded)	1	VIN	Positive supply voltage: +10 … +30VDC
	2	TXD	RS 232 transmit data from the BPS 8 to the host
	3	GND	Supply voltage: 0VDC
	4	RXD	RS 232 received data from the host to the BPS 8
	5	FE	Functional earth
	Thread	FE	Functional earth (housing)

Figure 7.3: MA 8.1 – Pin assignment PWR IN HOST/RS 232 connector

⚠ CAUTION

Degree of protection IP 67!
Degree of protection IP 67 is achieved only if the connectors and caps are screwed into place!

7.3.3 SW IN/OUT socket – switching input and switching output

SW IN/OUT (5-pin socket, A-coded)			
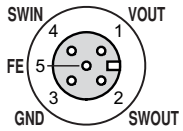 SW IN/OUT M12 socket (A-coded)	**Pin**	**Name**	**Comment**
	1	VOUT	Voltage supply for sensor system (VOUT identical to VIN at PWR IN)
	2	SWOUT	Switching output
	3	GND	GND for the sensor system
	4	SWIN	Switching input
	5	FE	Functional earth
	Thread	FE	Functional earth (housing)

Figure 7.4: MA 8.1 – Pin assignment SW IN/OUT socket

⚠ CAUTION

Degree of protection IP 67!

Degree of protection IP 67 is achieved only if the connectors and caps are screwed into place!

NOTE

The switching input/switching output are programmed via the **BPS Configuration Tool** configuration software. For further information, see see chapter 8.2, see page 46 et seq.

⚠ CAUTION

Connecting a sensor with standard M12 connectors!

If you use a sensor with a standard M 12 connector, please note the following:

↳ Use **only sensors** on which the **switching output does not lie on pin 2** or **sensor cables on which pin 2 is not assigned**. Otherwise, the switching output is not protected against feedback on the switching input. If the inverted sensor output lies on pin 2, erroneous behavior of the switching output will result.

Connecting the switching input / switching output

The MA 8.1 is provided with a switching input and a switching output. The connection of switching input / switching output is carried out in accordance with Figure 7.5.

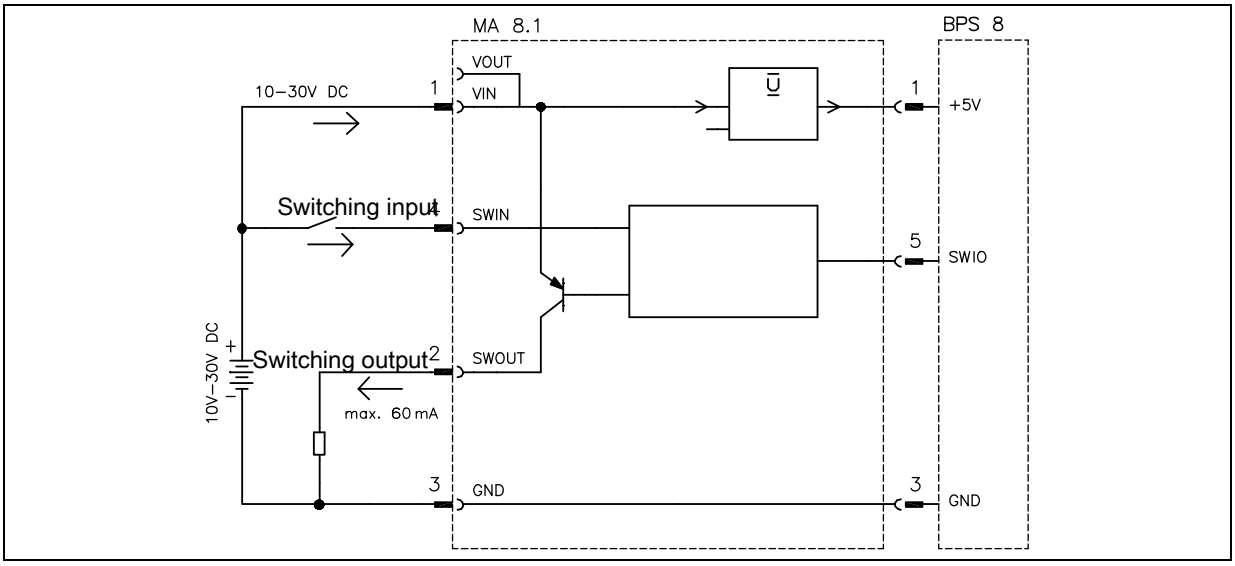

Figure 7.5: Connection of the switching input/output of the MA 8.1

7.3.4 BCL socket – connecting the BPS 8 to the MA 8.1

BCL (5-pin socket, A-coded)			
	Pin	Name	Comment
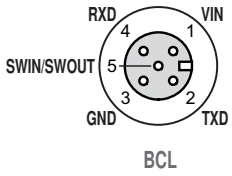 M12 socket (A-coded)	1	VIN	Supply voltage for BPS 8 +4.9 … +5.4VDC
	2	TXD	RS 232 transmission line
	3	GND	Supply voltage: 0VDC
	4	RXD	RS 232 receiving line
	5	SWIN/ SWOUT	Programmable switching input/output of the BPS 8
	Thread	FE	Functional earth (housing)

Figure 7.6: MA 8.1 – Pin assignment BCL socket

⚠ CAUTION

Degree of protection IP 67!

Degree of protection IP 67 is achieved only if the connectors and caps are screwed into place!

The BPS 8 is connected to the MA 8.1 via the KDS S-M12-5A-M12-5x-P1-xxx interconnection cable. The voltage supply is connected via the **PWR IN HOST/RS232** socket.

⚠ CAUTION

Connect functional earth!

↳ Ensure that the functional earth (FE) is connected correctly.

Fault-free operation is only guaranteed if the functional earth is connected properly.

7.4 Electrical connection via connection unit MA 8-01 / MA 8-02

Electrical data

Service interface	**No MA 8-01/MA 8-02 connected**: RS 232 with default data format, 9.6kBit/s, 8 data bits, no parity, 1 stop bit **With MA 8-01/MA 8-02 connected**: RS 485 replaces RS 232
Switching input/output	1 switching input, 1 switching output, each is programmable Switching input: 10 … 30VDC Switching output:I_{max} = 60mA output voltage = operating voltage
Operating voltage	10 … 30VDC
Power consumption	Max. 0.5W (without BPS 8)

7.4.1 PWR IN HOST/RS485 connector – voltage supply/RS 485

PWR IN HOST/RS485 (5-pin connector, A-coded)			
	Pin	**Name**	**Comment**
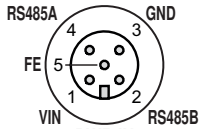 PWR IN HOST/RS485 M12 connector (A-coded)	1	VIN	Positive supply voltage: +10 … +30VDC
	2	RS485B	RS 485 receive/transmit data B-line
	3	GND	Supply voltage: 0VDC
	4	RS485A	RS 485 receive/transmit data A-line
	5	FE	Functional earth
	Thread	FE	Functional earth (housing)

Figure 7.7: MA 8-01/MA 8-02 – Pin assignment PWR IN HOST/RS485 connector

⚠ CAUTION

Degree of protection IP 67!
Degree of protection IP 67 is achieved only if the connectors and caps are screwed into place!

7.4.2 SW IN/OUT socket – switching input and switching output

SW IN/OUT (5-pin socket, A-coded)			
	Pin	**Name**	**Comment**
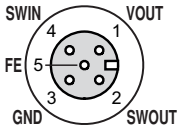 SW IN/OUT M12 socket (A-coded)	1	VOUT	Voltage supply for sensor system (VOUT identical to VIN at PWR IN)
	2	SWOUT	Switching output
	3	GND	GND for the sensor system
	4	SWIN	Switching input
	5	FE	Functional earth
	Thread	FE	Functional earth (housing)

Figure 7.8: MA 8-01/MA 8-02 – Pin assignment SW IN/OUT socket

CAUTION

Degree of protection IP 67!
Degree of protection IP 67 is achieved only if the connectors and caps are screwed into place!

NOTE

The switching input/switching output are programmed via the parameters in the **BPS Configuration Tool** configuration software. For further information, see see chapter 8.2, see page 46 et seq.

CAUTION

Connecting a sensor with standard M12 connectors!
If you use a sensor with a standard M 12 connector, please note the following:

- Use **only sensors** on which the **switching output does not lie on pin 2** or **sensor cables on which pin 2 is not assigned**. Otherwise, the switching output is not protected against feedback on the switching input. If the inverted sensor output lies on pin 2, erroneous behavior of the switching output will result.

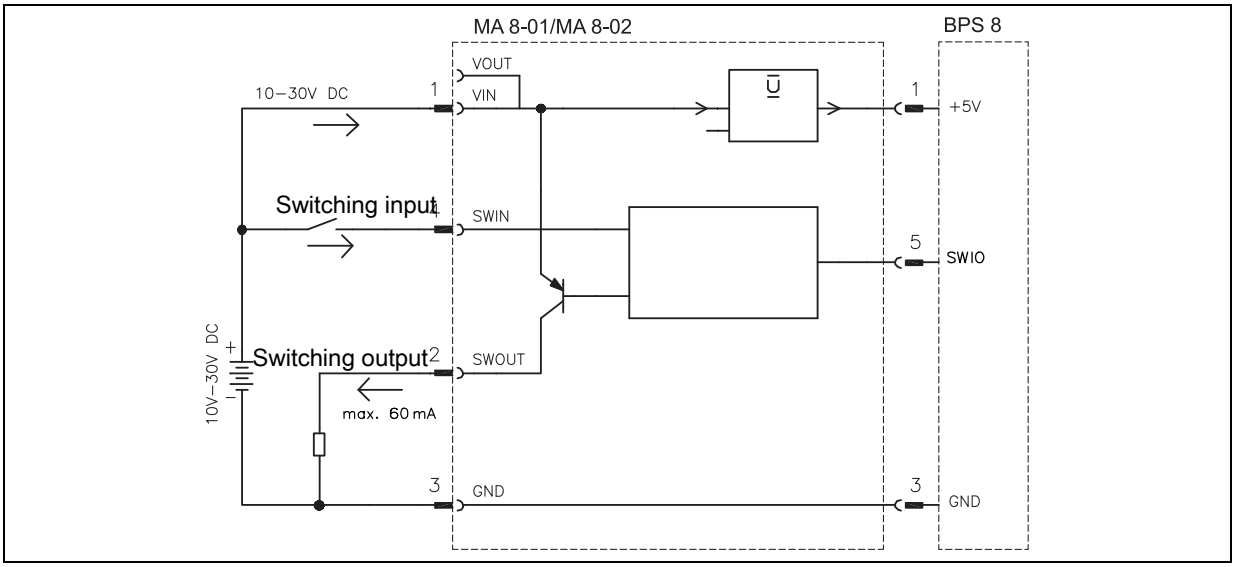

Figure 7.9: Electrical connection MA 8-01/MA 8-02

7.4.3 BCL/BPS socket – connecting the BPS 8 to the MA 8-01/MA 8-02

BCL/BPS (5-pin socket, A-coded)			
	Pin	**Name**	**Comment**
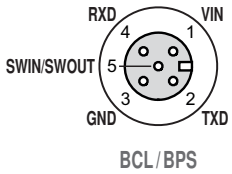 M12 socket (A-coded)	1	VIN	Supply voltage for BPS 8 aprox. +5.2VDC
	2	TXD	RS 232 transmission line
	3	GND	Supply voltage: 0VDC
	4	RXD	RS 232 receiving line
	5	SWIN/ SWOUT	Programmable switching input/output of the BPS 8
	Thread	FE	Functional earth (housing)

Figure 7.10: MA 8-01/MA 8-02 – Pin assignment BCL/BPS socket

CAUTION	
	Degree of protection IP 67! Degree of protection IP 67 is achieved only if the connectors and caps are screwed into place!

The BPS 8 is connected to the MA 8-01/MA 8-02 via the KDS S-M12-5A-M12-5x-P1-xxx interconnection cable. The voltage supply is connected via the **PWR IN HOST/RS485** socket.

CAUTION	
	Connect functional earth! ↳ Ensure that the functional earth (FE) is connected correctly. Fault-free operation is only guaranteed if the functional earth is connected properly.

7.4.4 Termination of the RS 485 interface

Permanently installed termination networks are present in the MA 8-01 and the MA 8-02 which differ in terms of resistance values. The resistor network terminates the outgoing RS 485 data interface, as shown in Figure 7.11, and cannot be switched off.

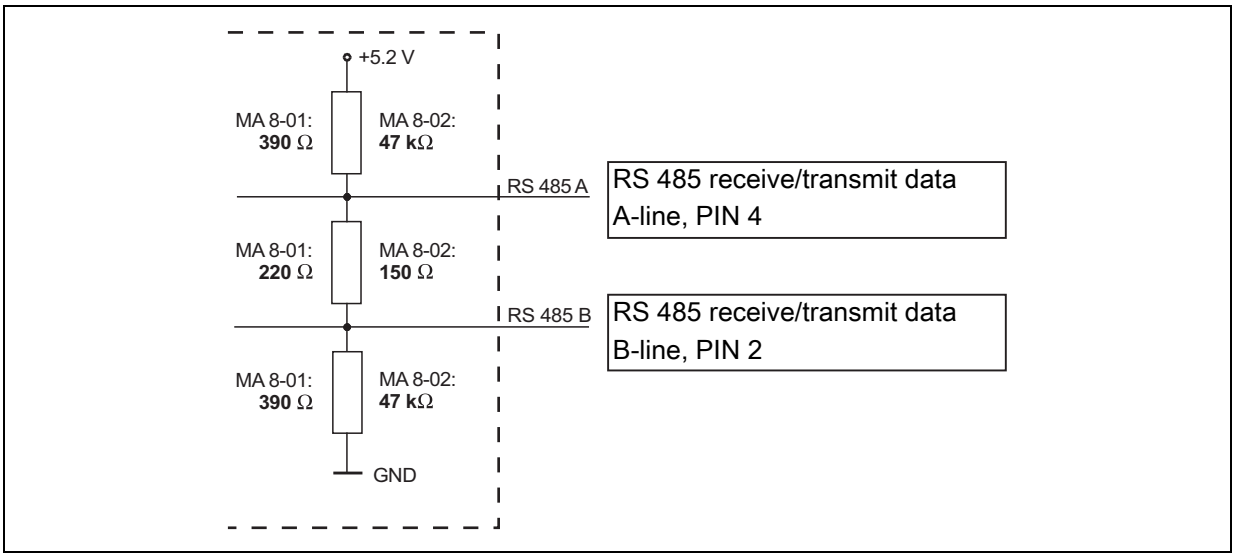

Figure 7.11: Termination of the RS 485 interface in the MA 8-01/MA 8-02

8 Configuration / device parameters

8.1 RS 232/RS 485 interface

8.1.1 General information

The BPS 8 system is supplied with an RS 232 interface. Using the MA 8-01 or the MA 8-02 permits this to be replaced by an RS 485 interface. All settings regarding the protocols and device parameters may be individually configured using the **BPS Configuration Tool** software.

NOTE	
	The current version of the BPS Configuration Tool can be downloaded from the Leuze home page at **www.leuze.com**.

NOTE	
	Detailed information on the electrical connection can be found in see chapter 7 "Electrical connection" on page 38.

8.2 BPS Configuration Tool software

8.2.1 Installation of the BPS Configuration Tool software

- Download the installation software to your PC:
  www.leuze.com > Products > Measuring Sensors > Sensors for Positioning > Bar Code Positioning Systems > BPS 8 > (Name of the BPS 8) > Tab Downloads > Software/Driver> BPS-Config V Configuration Software… .
- Unzip the compressed folder
- Call up the installation file (…-Setup.exe)
- Select the language for your installation and accept the license agreement.

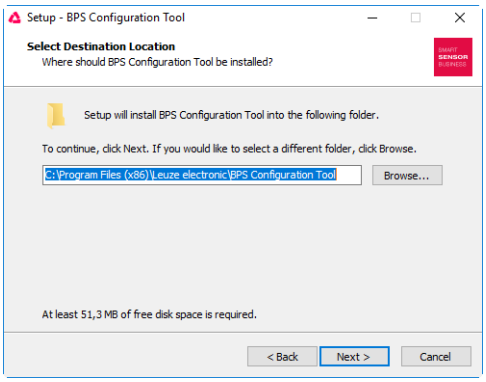

Figure 8.1: Installation directory selection

↳ Select the target folder for the installation and the components to be installed in the subsequent window.

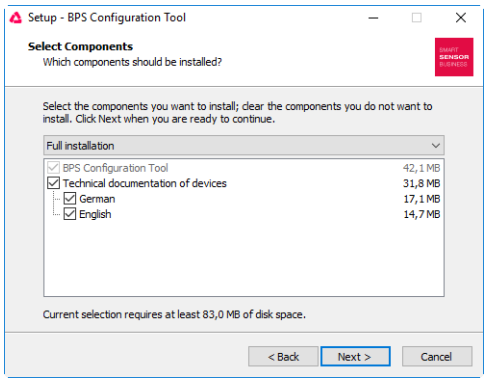

Figure 8.2: Selection of the components to be installed

↳ Confirm your entry with Next and follow the installation routine.
For further details please refer to online help of the "BPS Configuration Tool" software.

↳ Start the **BPS Configuration Tool** by clicking on the start menu entry or by double-clicking on the desktop icon.

8.2.2 Brief manual for the BPS Configuration Tool

General information

The **BPS Configuration Tool** program was developed as a convenient user-friendly tool to operate Leuze BPS systems.

To install the tool, double click on the **Setup.exe** file and follow the instructions. After the program has been successfully installed and started, the left side shows the default project **Leuze electronic**. In this project, every possible device has already been created.

This project is read-only but can be edited arbitrarily and saved under a different name using the **Project -> Save as** menu.

Creating a new project

↳ Select **Project -> New…** or click on the symbol in the top left corner.

↳ Assign a file name. Up to 256 characters are possible.
The **.PCT** extension must remain the same.

↳ Assign a project name (= title) to the project. Up to 256 characters are possible.

↳ Enter a description if required.

↳ After confirmation with **OK**, the new project name is shown in the top left corner.

Create individual devices

↳ Left click on project name (= title)

↳ **Device -> New -> Individual device** or click on the top left icon .

↳ Assign a device name

↳ Select device type (only BPS can be selected).

↳ Select BPS type

↳ Select BPS version = software version of the device

↳ After clicking **OK**, the new device is shown in the project.

Follow this procedure to create all devices required.

NOTE	
	When creating an individual device, the Leuze standard parameter set is always created together with the selected device according to the software version selected. The interface data from the PC to the device are also created together with the Leuze standard settings. These are: • Data format: 9600 / 8 / 1 / None • Framing protocol: <STX><data><CR><LF> • Address: none

Copying and pasting devices

It is possible to copy and paste individual devices. To do this, the device to be copied must be selected. By clicking on the right mouse button, the **Copy** and **Paste** functions become available. Only the device settings are copied, not the deposited interface data of the PC.

Renaming devices

It is possible to rename individual devices. This requires the respective device to be selected. Right click on the mouse button, select **Device properties…** and enter the desired description under **Name**.

Graphical configuration

If a device is selected via the left mouse button, the window of the graphical configuration opens automatically. The graphical interface visualizes the device settings and these can be loaded or transferred using the symbols and .

For further help on device-specific parameters, the technical description for the selected device may be opened. To view the technical description of the device, click on the symbol.

All parameters that were changed, i.e. that deviate from the Leuze factory settings, have a yellow background or frame color or are marked with the symbol for better orientation.

To reset all parameters of the selected device back to the Leuze factory settings, click on the symbol. This only resets the values in the PC and not the settings in the BPS.

Tree structure configuration

The second option for working off-line is the tree structure. The tree structure contains all settings of the graphical structure plus additional parameters.

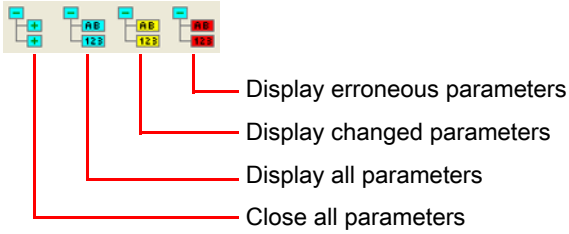

Terminal

The third option of communicating with the device is the terminal. This is only possible online.

If no device is selected, only the terminal is available. Its interface settings are available under **Options -> Communication…**. They can also be selected by clicking on the communication parameters displayed in the lower status bar.

Standard commands

The right third of the terminal window shows the following symbols for direct online commands:

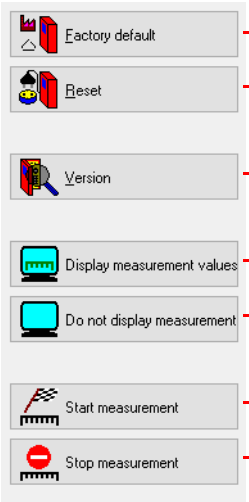

Sets all parameters in the device to the factory settings!

Software reset

Version query

Displays the measurement values on the terminal

Does not display the measurement values on the terminal

Starts the measurement process

NOTE	
	Switching between online and offline configuration! ↳ Please note that the device settings are not always displayed with their current values if one changes between online and offline configuration. If a parameter is edited using an online command, the change is only displayed in the graphical menu (and thus stored in the project) once the edited parameters have been uploaded from the device!

Terminal options

From the menu, select **Terminal -> Options…** or click on the symbol (terminal must be selected). From the **Send** and **Receive** tabs choose between the 3 data formats **ASCII**, **Hexadecimal** and **Decimal**. Standard: **ASCII**.

NOTE	
	If your computer has the **Terminal** font installed, please select this font for the display. In the **Terminal** tab you also have the option to output the **Line number**, the **Date** and the **Time**.

Terminal content

Use the , , and symbols to save, open or print the data in the terminal window.

Use to clear the content of the terminal window.

In **Version V01.12** and higher of the **BPS Configuration Tool**, the terminal content is logged automatically in the file **terminal.txt**. This file is stored in the main directory of the BPS Configuration Tool. It may be edited with any text editor.

NOTE	
	If another device is selected, the file content is deleted and the recording starts again.

User-defined commands

By using the symbol, you can create your own commands or sequences or load previously stored commands. In the window that appears, the following labels mean:

Command name: description of the symbol's command.

Command: actual command sequence.

Click the **Accept** button and the new commands appear in the right third of the terminal window below the permanently defined symbols.

Send file

This feature has been implemented to permit several consecutive sequences to be transmitted to the device. This requires the sequences to be created as a text file first. The text file can then be retrieved under **Terminal -> Send file**.

Boot

For the scanner families BPS 8 and BPS 3x, the firmware may be changed directly with the BPS Configuration Tool. This requires the respective firmware boot file, however. To obtain the file, please get in touch with your respective contact person.

Graphical measurement value monitoring

This view allows the current position of the BPS system to be graphically displayed.

Setting the device-specific interface values

This sets the connection (interface) **from the PC to the device** and not the interface of the device. For service interface operation, the settings here do not need to be edited.

If the connected device is **not** operated via the service protocol:

↳ Use the left mouse button to select the device to be edited.

↳ Right click and select **Communication**. In the **Communication properties** window that opens, carry out the respective changes.

If the settings were changed, the Leuze standard parameters can be reselected by clicking on the button.

MA 8-01/MA 8-02 connection unit

The MA 8-01/MA 8-02 connection unit is not relevant for the configuration and is thus not explicitly supported in the BPS Configuration Tool.

8.2.3 Setting the parameters

You now have commissioned the BPS 8 and are ready to configure it. Using the parameter options made available by the BPS 8, you can configure the BPS 8 to suit your individual area of application. For instructions regarding the various setting options, refer to the online help or to see chapter 8.5, see page 53.

The various parameter sets are explained briefly in see chapter 8.4, to understand what is happening during parameter setting. The setting of the parameters then takes place in the **service** operating mode, which is described in the following chapter.

8.3 Service operating mode

Setting the required parameters is carried out in the **Service** operating mode. The operating mode **Service** provides the following defined operating parameters on the external RS232 interface, no matter how the BPS 8 is configured for standard operation:

- Transmission rate: 9.6 kBit/s
- No parity
- 8 data bits
- 1 stop bit
- Prefix: STX
- Postfix: CR, LF

8.3.1 Activate service interface

The service interface may be activated as follows:

- Via a "**v**" command during power-up (initialization phase).
- Via the **SRV** control bar code (see accompanying package insert) in front of the reading window during power-up (initialization phase)

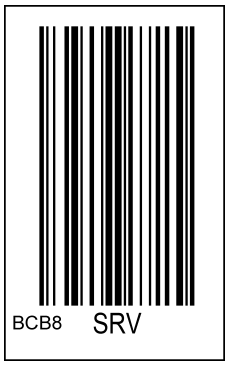

Figure 8.3: SRV control bar code

8.3.2 Connecting the service interface

You can connect a PC or a terminal to the BPS 8 via the serial interface and configure the BPS 8 through this connection. For this, you need a crossed RS 232 interconnection cable (null modem cable) that provides the connections RxD, TxD and GND. A hardware handshake via RTS, CTS is not supported at the service interface.

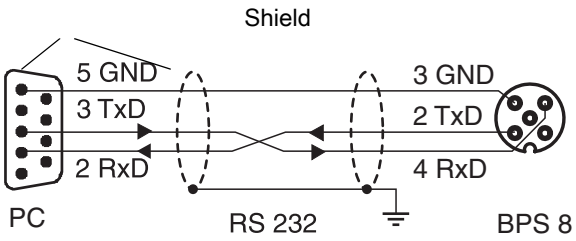

Figure 8.4: Connecting the RS 232 service interface to a PC or terminal

8.3.3 Overview of commands and parameters

Online commands can be used to send commands directly to the BPS 8 for control and configuration. For this, the BPS 8 has to be connected to a host or service computer via the serial interface. The commands described can be sent either via the host or the service interface.

General online commands

Command	Description
M+	Activation of the measurement.
M-	Deactivation of the measurement.
MMS	Controls the data output via the service interface. A single measurement value is output (Single Shot mode).
MMTyyyy	Controls the data output via the service interface. Measurement values are output cyclically; time must be subsequently specified: yyyy = Time specification in ms. Example: MMT0500. Measurement values are output via the service interface in a time interval of 500 ms.

Command	Description
MM-	Deactivation of the MMTyyy function. If the cyclical output via the service interface is no longer required, the function must be deactivated using the command MM-.
PC20	Resets all parameters in the BPS 8 to Leuze default values.
V	Version query, or puts the device into service mode. This requires a "V" to be transmitted during the initialization phase of the BPS 8.

8.4 Overview of the parameter structure

Using the **BPS Configuration Tool** program, parameters can be changed via the service interface. These parameters are separated into individual tabs in the **Graphical configuration** menu.

The following tabs are available:

Tab name	Folder contents
Control see page 53	• Measurement start mode
	• Measurement stop mode
	• Maximum polling interval
Position detection see page 54	• Resolution for the position value
	• Integration time
	• Preset value added to tape value
	• Counting direction for position calculation
	• Scaling factor
	• Offset value
	• Maximum permitted measurement length
	• Minimum permitted measurement length
	• Position tolerance time
	• Error output delay
Communication see page 58	• Baud rate
	• Data mode
	• Protocol
	• Address
Switching input see page 59	• Inversion
	• Mode
	• Debounce time
	• Start-up delay
	• Pulse duration
	• Switch-off delay
	• Function
Switching output see page 60	• Activation
	• Deactivation
	• Pulse duration

8.5 Detailed description of the tabs

NOTE	
	Note cross-references to parameters! In the following detailed descriptions of the tabs you will find in the last column of the tables **cross references (CR) to parameters and input/output data of other tabs** which are directly related to the described parameter. **Pay attention to these cross-references during configuration**.

Within the tabs, the **parameters** are labeled alphanumerically from a … z.

Example:

The parameter a **Preset value static** [mm] is activated only if the preset teaching is carried out via switching input h.

8.5.1 Control

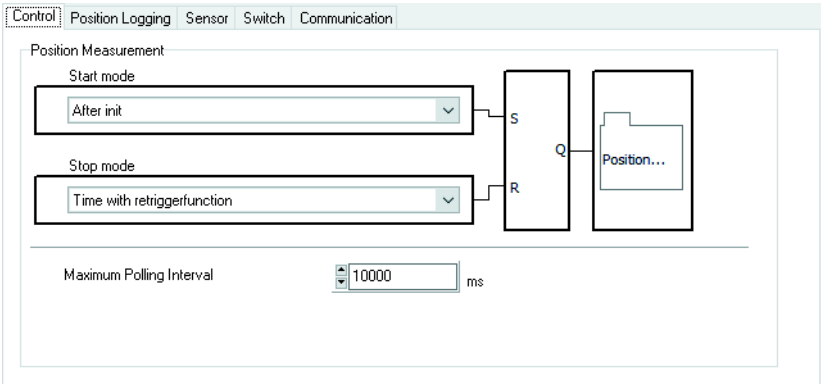

Figure 8.5: Control tab

Description:

The control manages the timing of the position calculation by starting and stopping the decoding. Control is performed depending on certain events such as the switching input or time functions. Using parameters, the events which influence the states are determined.

Parameter

Parameter	Description	Value range	Default	Unit	CR
a **Start mode**	The start mode determines by which event the position measurement is started.	1: After initialization **2: Via command or switching input**	2	–	**Switching input** h
b **Stop mode**	The stop mode determines after which event the position measurement is stopped.	2: Time (Polling Interval) **3: Time with re-triggering function (polling interval) via command or switching input** **4: Via command or switching input (the switching input must be programmed for this purpose)**	3	–	**Switching input** h
c **Maximum polling interval**	Time period after which the scanning beam is switched off if no polling takes place.	0 … 65,535	10,000	ms	

8.5.2 Position detection

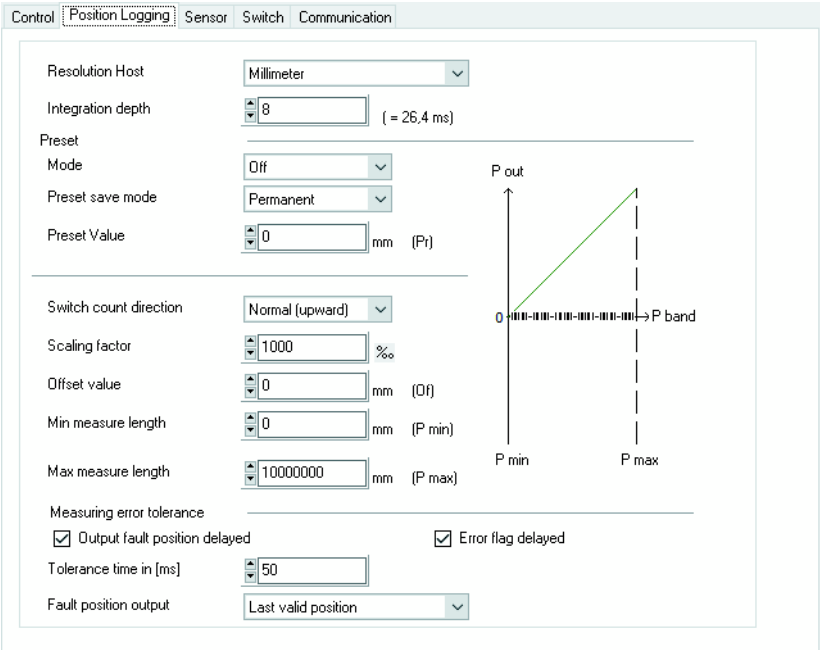

Figure 8.6: Position detection tab

Description:

The position detection controls all settings that affect the position values.

Resolution parameter

Parameter	Description	Value range	Default	Unit	CR
a **Resolution in [mm]**	The parameter specifies the resolution for the position value. The resolution has no effect on - Static preset - Offset.	1: 0.01 2: 0.1 **3: 1** 4: 10 5: 100 6: 1,000	3	mm	–

With the **Resolution** parameter, the resolution for the position values is defined. This parameter also performs a rounding correction (the position value is divided by the defined value range).

NOTE	
	The resolution only determines the mathematical decimal value and has no effect on the measurement accuracy.

NOTE	
	Maximum position value which can be represented The binary protocols 1 to 6 convey the position value with a different number of data bits. The number of data bits and the selected resolution determine the maximum position value that can be represented.

	Maximum position value which can be represented with a resolution of			
	1 mm (default)	0.1 mm	0.01 mm	0.001 mm
Binary protocol 1, 4, 6 (32 data bits)	10,000,000 mm[a)]	10,000,000 mm[1)]	10,000,000 mm[1)]	4,294,967 mm
Binary protocol 2 (24 data bits)	10,000,000 mm[1)]	1,677,721 mm	167,772 mm	16,777 mm
Binary protocol 3 (21 data bits)	2,097,152 mm	209,715 mm	20,971 mm	2,097 mm

a) The maximum position value that can be presented is limited by the maximum length of the bar code tape.

Integration depth parameter

Parameter	Description	Value range	Default	Unit	CR
b **Integration time**	Number of consecutive scans which are to be used for position determination.	4 … 32	**8**	**Integration steps**	–

The integration depth parameter is used to specify the number of raw position data which is used for integration in order to determine the position value.

Integration depth	Integration time [ms]
4	13.2
5	16.5
6	19.8
7	23.1
8 (default)	26.4
9	29.7
10	33.0
:	:
29	95.7
30	99.0
31	102.3
32	105.6

In order to obtain more exact measurement data while in the static state or for very slow travel speeds, the integration depth can be increased here. If, however, a high integration depth is used for high speeds, the contouring error is increased. With respect to contouring errors and exact measurement data, very good results have been obtained using 8 integration steps. Using 8 integration steps, the integration time is 26.4 ms.

Preset parameter

Parameter	Description	Value range	Default	Unit	CR
c **Preset mode**	Switches the preset function on or off	**1: Off** 2: On	**1**	–	–
d **Memory mode**	Store data temporarily or permanently.	**1: Permanently** 2: Temporarily	**1**	–	–
e **Preset value in [mm]**	New position value after teach event.	0 … 10,000,000	**0**	**mm**	**Switching input** h

With this parameter, a preset value can be defined which the BPS 8 outputs following a teach event. A switching input function is defined as a teach event. After reading in the preset, the current position value is replaced by the preset value and the position value is now calculated and output on the basis of the preset. The preset remains stored in the BPS 8 and remains active even following a new start. In order for the BPS 8 to again output the position value without the preset, the Preset mode must be switched off again.

Counting direction parameter

NOTE	
	To activate this function, the preset mode must be switched on.

The **preset value is always entered in units of mm**, independent of the resolution setting. The scaling factor has no effect on the static preset value.

Parameter	Description	Value range	Default	Unit	CR
f **Counting direction**	Counting direction for position calculation.	**0: Normal** 1: Inverted	**0**	–	–

NOTE

The BPS 8 is set as follows by default:

The position value is output with **normal** counting direction. With the **inverted** counting direction, 10,000,000mm minus the position value is output. The **Preset value** and **Offset value** parameters can be used to influence this behavior.

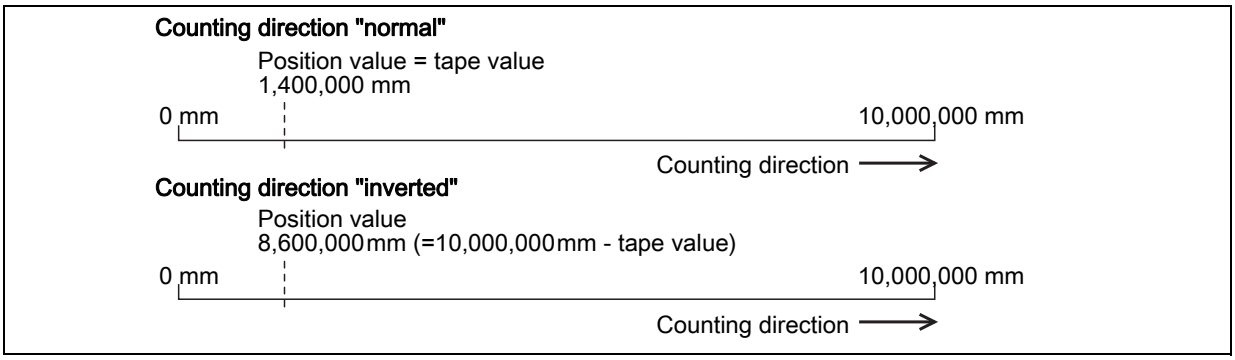

Figure 8.7: Counting direction for position calculation

Scaling factor parameter

Parameter	Description	Value range	Default	Unit	CR
g **Scaling factor in [‰]**	Scaling factor used to convert the position values.	0 … 65,535	**1,000**	**‰**	–

The scaling function is used to convert the tape values to any unit of measurement. To do this, the tape value is multiplied by the scaling factor.

NOTE

This parameter affects the *Offset value.* The Preset value parameter is not influenced by the scaling.

Offset value parameter

Parameter	Description	Value range	Default	Unit	CR
h **Offset value in [mm]**	Offset value added to tape value.	-10,000,000 … 10,000,000	**0**	**mm**	–

This function adds an offset value to the tape value.

NOTE

If the Preset parameter is activated and, as a result, a new value assigned to the tape value, the Offset function no longer affects the position value. The offset is not reactivated until the preset function is canceled. The offset value is entered in mm. When entering the offset value, the scaling factor parameter must be taken into account.

Min./max. measurement length parameter

Parameter	Description	Value range	Default	Unit	CR
i **Min. measurement length in [mm]**	Minimum permitted measurement length.	0 … 2,147,483,647	**0**	**mm**	**Switching output** d, e
j **Max. measurement length in [mm]**	Maximum permitted measurement length.	0 … 2,147,483,647	**10,000,000**	**mm**	**Switching output** d, e

With this parameter, a working limit on the bar code tape can be defined. The BPS 8 outputs position values within these minimum and maximum limits. Outside of this limit, a position value of zero is output.

NOTE

The switching output can be used to indicate that the measured value is outside of the measurement range. To enable this function, the "outside measurement range" or "inside measurement range" parameter must be activated.

Measurement error tolerance parameter

Parameter	Description	Value range	Default	Unit	CR
k **Tolerance time in [ms]**	Specifies the time for the display of the last position value following an error.	0 … 65,535	**50**	**ms**	–
l **Delayed output of position error**	Delays the output of an error by the configured tolerance time.	0: No, error delay deactivated **1: Yes, error delay activated**	**1**	–	–
m **Delayed output of error status**	Delays the output of an error in the status byte of the binary protocol by the configured tolerance time.	0: No, error delay deactivated **1: Yes, error delay activated**	**1**	–	–

The measurement error tolerance function is used to configure a time which results in an extended output of the last position value in the event of an error. If the position value changes momentarily to zero, e.g. due to a brief interruption of the scanning beam, soiling of the bar code tape or other short-term disturbances, the BPS 8 transmits the last valid position value.

If the error disappears within the configured time, the control notices nothing. The availability of the system is thereby ensured. No new values are delivered by the BPS 8, however, for a period of time extending up to the configured tolerance time. With the **Delay error output** parameter, an integration error (corresponds to a missing position value) can be signaled immediately or after the tolerance time has elapsed. If the error persists after the tolerance time has elapsed, the last valid position value is output.

Position value in the case of failure parameter

Parameter	Description	Value range	Default	Unit	CR
n **Position value in the case of failure**	In the case of failure, retain the last position value or output zero.	0: Zero **1: Last valid position value**	**1**	–	–

8.5.3 Communication

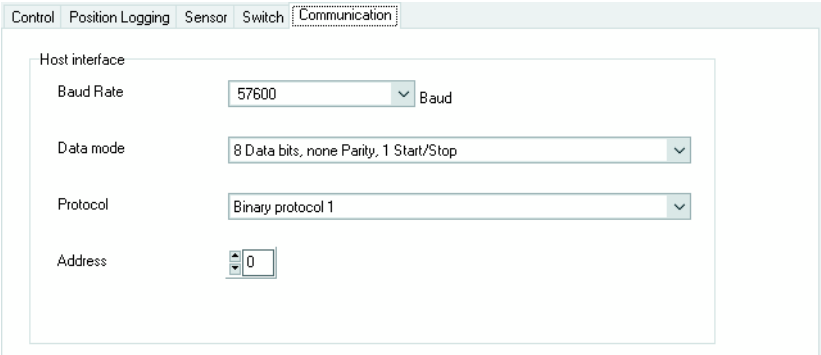

Figure 8.8: Communication tab

Parameter

Parameter	Description	Value range	Default	Unit	CR
a **Baud rate**	Setting the baud rate.	4: 1200 5: 2400 6: 4800 7: 9600 8: 19200 9: 38400 **10: 57600** 11: 62500 12: 115200 13: 187500	10	Baud	–
b **Data mode**	Setting of the data mode.	1: 7 data bits, no parity, 2 stop bits 2: 7 data bits, even parity, 1 stop bit 3: 7 data bits, even parity, 2 stop bits 4: 7 data bits, odd parity, 1 stop bit 5: 7 data bits, odd parity, 2 stop bits **6: 8 data bits, no parity, 1 stop bit** 7: 8 data bits, no parity, 2 stop bits 8: 8 data bits, even parity, 1 stop bit 9: 8 data bits, even parity, 2 stop bits 10: 8 data bits, odd parity, 1 stop bit 11: 8 data bits, odd parity, 2 stop bits 12: 8 data bits, no parity, 1 stop bit + WakeUp bit 13: 9 data bits, no parity, 1 stop bit	6	–	–
c **Protocol**	Setting the protocol type.	17: Binary protocol 2 18: Binary protocol 3 **19: Binary protocol 1** 20: Binary protocol 4 23: Binary protocol 6	19	–	–

Parameter	Description	Value range	Default	Unit	CR
d **Address**	Sets the participant address for the RS 485 network.	**0: Address 0** 1: Address 1 2: Address 2 3: Address 3	0	–	–

NOTE

The 5 different binary protocols are described in a separate chapter (**see chapter 9 "Protocols for position value output"**).

NOTE

The settings in the communication area apply to the RS 232 interface of the BPS 8 and to the settings of the RS 485 interface of the MA 8-01/MA 8-02. **The conversion from RS 232 to RS 485 in the MA 8-01 is implemented entirely in hardware**. The communication settings for the RS 232 interface also apply to the RS 485 for this reason.

8.5.4 Switching input

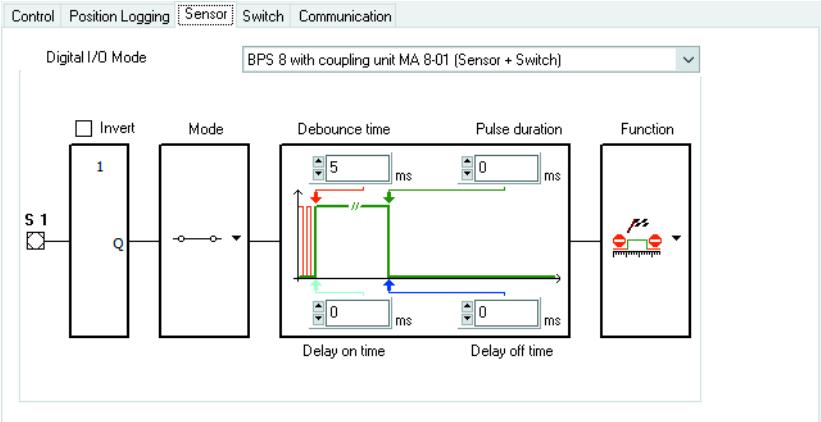

Figure 8.9: Switching input tab

Description:

Within this tab, the mode of operation of the digital switching input is defined.

Parameter

Parameter	Description	Value range	Default	Unit	CR
a **Digital I/O mode**	Defines whether the switching input and output are activated via the MA 8-01/MA 8-02 or whether only the switching input or only the switching output is activated.	0: Not released **1: BPS 8 with MA 8-01/ MA 8-02 (switching input + switching output)** 2: Switching input 3: Switching output	1	–	–
b **Inversion**	The parameter defines the logic of the applied signal. In case of an inversion, an external HIGH level is interpreted as an internal LOW level.	**0: No (active high)** 1: Yes (active low)	0	–	–
c **Mode**	This parameter controls the release of the switching input.	0: Off **1: On**	1	–	–

Parameter	Description	Value range	Default	Unit	CR
d **Debounce time in [ms]**	This parameter defines a debounce time which is implemented via software.	0 … 255	5	ms	–
e **Start-up delay in [ms]**	The parameter influences the time behavior during switch-on.	0 … 65535	0	ms	–
f **Pulse duration in [ms]**	The parameter defines a minimum time period before the signal is reset.	0 … 65535	0	ms	–
g **Switch-off delay in [ms]**	The parameter defines a time delay for the signal during switch-off.	0 … 65535	0	ms	–
h **Function**	The parameter specifies the function which is to be activated or deactivated by a status change at the switching input.	0: No function	2	–	–
		1: Teach preset			**Position detection** e
		2: Start/stop position measurement			**Control** a
		3: Stop position measurement			**Control** b

NOTE
The switching input function **Pos. measurement start/stop** in the **Function** parameter means: • High level at the switching input starts the position measurement. • Low level at the switching input stops the position measurement.

8.5.5 Switching output

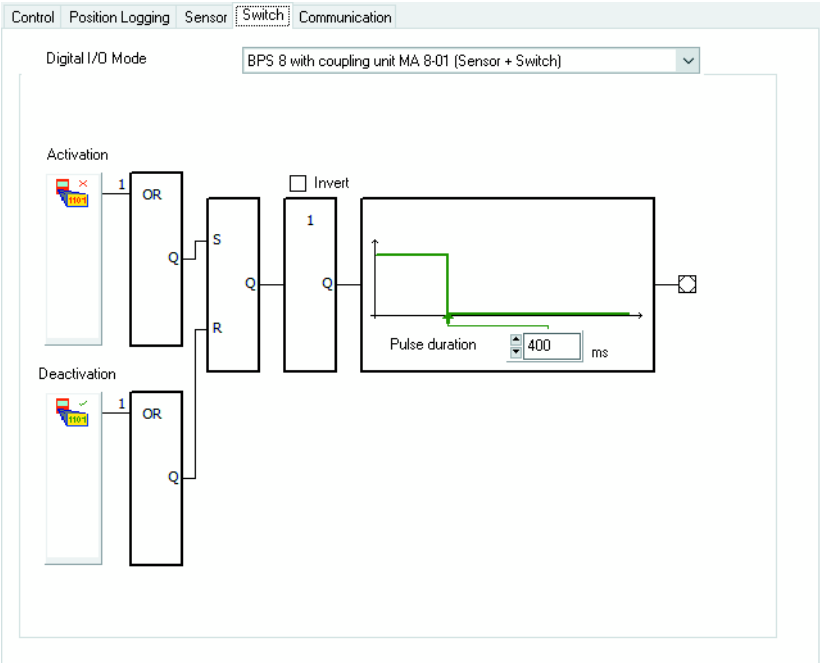

Figure 8.10: Switching output tab

Description:

Within this tab, the mode of operation of the digital switching output is defined.

Parameter

Parameter	Description	Value range	Default	Unit	CR
a Digital I/O mode	Defines whether the switching input and output are activated via the MA 8-01/MA 8-02 or whether only the switching input or only the switching output is activated.	0: Not released **1: BPS 8 with MA 8-01/ MA 8-02 (switching input + switching output)** 2: Switching input 3: Switching output	1	–	–
b Bias level / inverted	The parameter defines the bias level of the switching output.	**0: LOW (0V)** 1: HIGH (+Ub)	0	–	–
c Pulse duration in [ms]	The parameter defines the switch-on time period for the switching output. If the value is 0, the signal is static.	0 ... 1300	400	ms	–
d Switch-on function [EF]	The parameter specifies the events which set the switching output: - outside measurement range - within measurement range - erroneous measurement - successful measurement	Each 0: Not active 1: Active	0 0 1 0	–	Position detection i , j Position detection i , j Position detection Position detection
e Switch-off function [AF]	The parameter specifies the events which reset the switching output: - outside measurement range - within measurement range - erroneous measurement - successful measurement	Each 0: Not active 1: Active	0 0 0 1	–	– Position detection i , j Position detection i , j Position detection Position detection

NOTE

The events of the switch-on function and switch-off function are both linked to one another with a logical OR.

9 Protocols for position value output

This chapter describes the five binary protocols for communication between host and BPS 8 that can be selected via the communication parameters (see see chapter 8.5.3).

9.1 Binary protocol 1 – BPS 8 SM 10x-01 / BPS 8 SM 10x-05

NOTE

With the **BPS Configuration Tool**, the user can individually adapt the binary protocols 1 and 6 to the specific requirements of the application. The binary protocols 2, 3 and 4, on the other hand, have a fixed structure and cannot be modified.

9.1.1 Data format

Data format	BPS 8 SM 10x-01	BPS 8 SM 10x-05
Baud rate	57.6 kBit/s	19.2 kBit/s
Number of data bits	8	8
Number of start bits	1	1
Number of stop bits	1	1
Parity	None	None
Addressing	None	None
Operating mode	RS232 half duplex	RS232 half duplex
Handshake	None	None

Table 9.1: BPS 8 SM 10x-01 / BPS 8 SM 10x-05 data format

NOTE

Using the **BPS Configuration Tool**, the data format may be configured arbitrarily. The default values are the values shown above.

9.1.2 Request telegram to the BPS 8 SM 10x-01 / BPS 8 SM 10x-05

The request telegram consists of two bytes.

Request telegram structure

Byte no.	Designation	Bit 7	Bit 6	Bit 5	Bit 4	Bit 3	Bit 2	Bit 1	Bit 0
0	Request byte	0	0	0	SIN-GLE	POS	SLEEP	M	D
1	XOR combination	Exclusive OR combination of byte 0 with 00_h (repetition of the request byte)							

Description

Byte	Bit	Name	Function	Description
0	0	D	Request diagnostic information	1 = Request diagnostic data
				0 = Do not request diagnostic data
	1	M	Request marker data	1 = Request marker data
				0 = Do not request marker data
	2	SLEEP	Activate Standby mode	1 = Activate Standby mode.
				0 = Positioning mode
	3	POS	Request position information	1 = Request position data
				0 = Do not request position data
	4	SIN-GLE	Request single measurement	1 = Request single measurement (laser on, measure-ment, laser off)
				0 = Do not request single measurement
	5…7	–	None	Without function, bit permanently set to 0
1	0	XOR	XOR combination	Exclusive OR combination of byte 0 with 00_h

Bit **SINGLE**: If this bit is set to 1, a single measurement is output (laser on – measurement – laser off).
The response telegram to the "SINGLE" request is sent after around 40 ms. The "SINGLE" request cycle must be greater than 40 ms.

Bit **POS**: If this bit is set to 1, the position data is output.
The "POS" request cycle must be greater than 10 ms. If the no "POS" request occurs within 10 ms, the laser is deactivated. A response telegram is sent to a repeat "POS" request after approx. 30 ms.

Bit **SLEEP**: If this bit is set to 1, the Standby mode is activated.
The polygon wheel motor and the laser are switched off in Standby. Diagnosis of the read system cannot be performed. When the device is reactivated, the system start-up time is approx. 5 s.

Bit **M**: If this bit is set to 1, the marker bar code content is output.

Bit **D**: If this bit is set to 1, the diagnostic data is sent in response. An indicated error is reset once all diagnostic data has been polled. This is indicated by the status LED changing from red to green.

NOTE

It is advisable to set only one bit in the request byte, as the BPS can only answer one request at a time. If several bits are set, the function with the highest priority is executed.

Priority of the bits in the request byte:

- Priority 1: Diagnostic data request (D)
- Priority 2: Marker data request (M)
- Priority 3: Standby request (SLEEP)
- Priority 4: Position data request (POS)
- Priority 5: Request for one-time transmission of position data (SINGLE)

9.1.3 BPS 8 SM 10x-01 / BPS 8 SM 10x-05 response telegram

The response telegram consists of 6 bytes.

Response telegram structure

Byte no.	Designation	Bit 7	Bit 6	Bit 5	Bit 4	Bit 3	Bit 2	Bit 1	Bit 0
0	Status byte	0	Q1	Q0	SLEEP	MM	D	OUT	ERR
1	Data byte 1	P31	P30	P29	P28	P27	P26	P25	P24
2	Data byte 2	P23	P22	P21	P20	P19	P18	P17	P16
3	Data byte 3	P15	P14	P13	P12	P11	P10	P09	P08
4	Data byte 4	P07	P06	P05	P04	P03	P02	P01	P00
5	XOR combination	Bitwise exclusive OR combination of bytes 0 to 4							

Description

Byte	Bit	Name	Function	Description
0	0	ERR	Internal error	1 = An internal error has occurred
				0 = No error exists
	1	OUT	Tape error	1 = No bar code decodable
				0 = Bar code decodable
	2	D	Diagnostic data exist	1 = Diagnostic data are present in the memory
				0 = No diagnostic data exists
	3	MM	Marker bar code present	1 = The content of a marker bar code is in the memory
				0 = No content of a marker bar code in the memory
	4	SLEEP	Standby state	1 = Device is in Standby mode (see request telegram)
				0 = Device is in positioning mode
	5	Q0	Reading quality Q1Q0	00 = Reading quality > 75%
				01 = Reading quality 75% … 50%
	6	Q1		10 = Reading quality 50% … 25%
				11 = Reading quality < 25%
	7	–	None	Without function, bit permanently set to zero
1…4	0…7	Data, P31 … P 00	Data	Depending on the request, the data are transferred here; either position data, diagnostic data, marker data or SLEEP response.
5	0…7	XOR	XOR combination	Bitwise exclusive OR combination of bytes 0 to 4

Position data

The position data are output **in two's complement** as a **32-bit signed integer** value by default in millimeters with a resolution of 1 mm (see chapter 8.5.2 "Position detection")

NOTE

The **P00** data bit corresponds to the **LSB**, the **P31** data bit corresponds to the **MSB**.

Marker bar code

If information consisting of two of the capital letters A / B / C / D / E / F / G and one digit is read, the **MM** bit for the recognition of a marker bar code is set in the status byte:

0 = No marker data in the memory.
1 = Marker data in the memory.

The data content of the marker bar code can now be requested in the request telegram using the request bit **M.** If the data content of the marker bar code is not requested, the position continues to be output.

The marker data are output as an ASCII hex value in the data bytes 2 … 4.

Data byte 2: First marker bar code character (capital letter **A, B, C, D, E, F, G**)
Data byte 3: Second marker bar code character (capital letter **A, B, C, D, E, F, G**)
Data byte 4: Third marker bar code character (digit **1**)

NOTE

If no marker data are present in the memory of the BPS 8 and the request bit **M** is set, **E00** is transmitted.

NOTE

For more detailed information on marker bar codes, see see chapter 5.3 "Marker bar codes" on see page 22.

Example: output of marker data

Marker bar code: **AA1**

Data byte 2 = **A** = 41_h = 01000001_b

Data byte 3 = **A** = 41_h = 01000001_b
Data byte 4 = **1** = 31_h = 00110001_b

Byte no.	Designation	Bit 7	Bit 6	Bit 5	Bit 4	Bit 3	Bit 2	Bit 1	Bit 0
0	Status byte	0	Q1	Q0	SLEEP	MM	D	OUT	ERR
1	Data byte 1	0	0	0	0	0	0	0	0
2	Data byte 2	0	1	0	0	0	0	0	1
3	Data byte 3	0	1	0	0	0	0	0	1
4	Data byte 4	0	0	1	1	0	0	0	1
5	XOR combination	Exclusive OR combination of bytes 0 to 4							

Function sequence when a marker bar code is in the detection area:

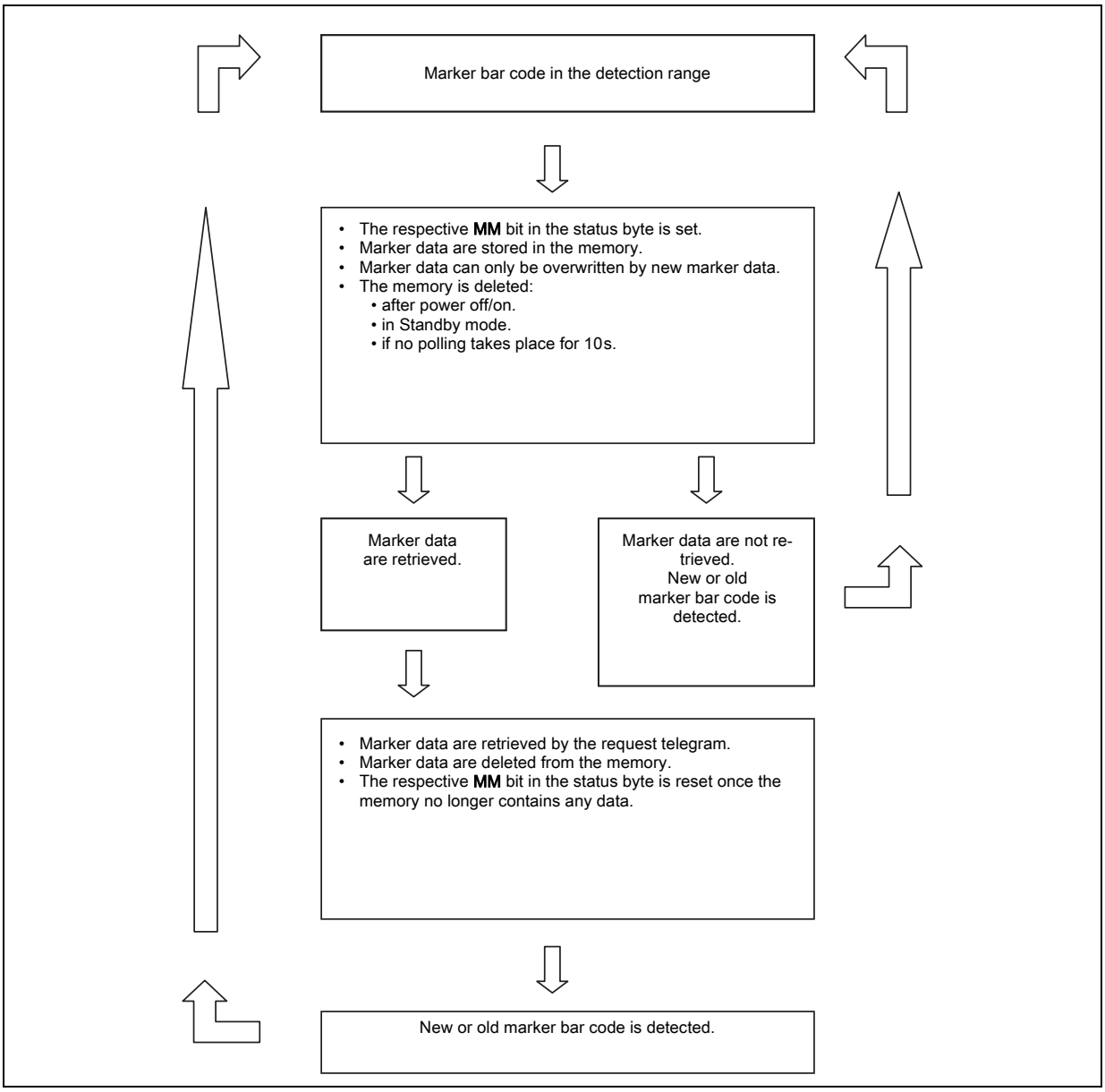

Figure 9.1: Function sequence for marker bar code inside the detection area

This process toggles the data as long as the MM bit is set to 1, and the memory contains marker data. The MM status information does not depend on the BPS' speed or on the control's clock rate.

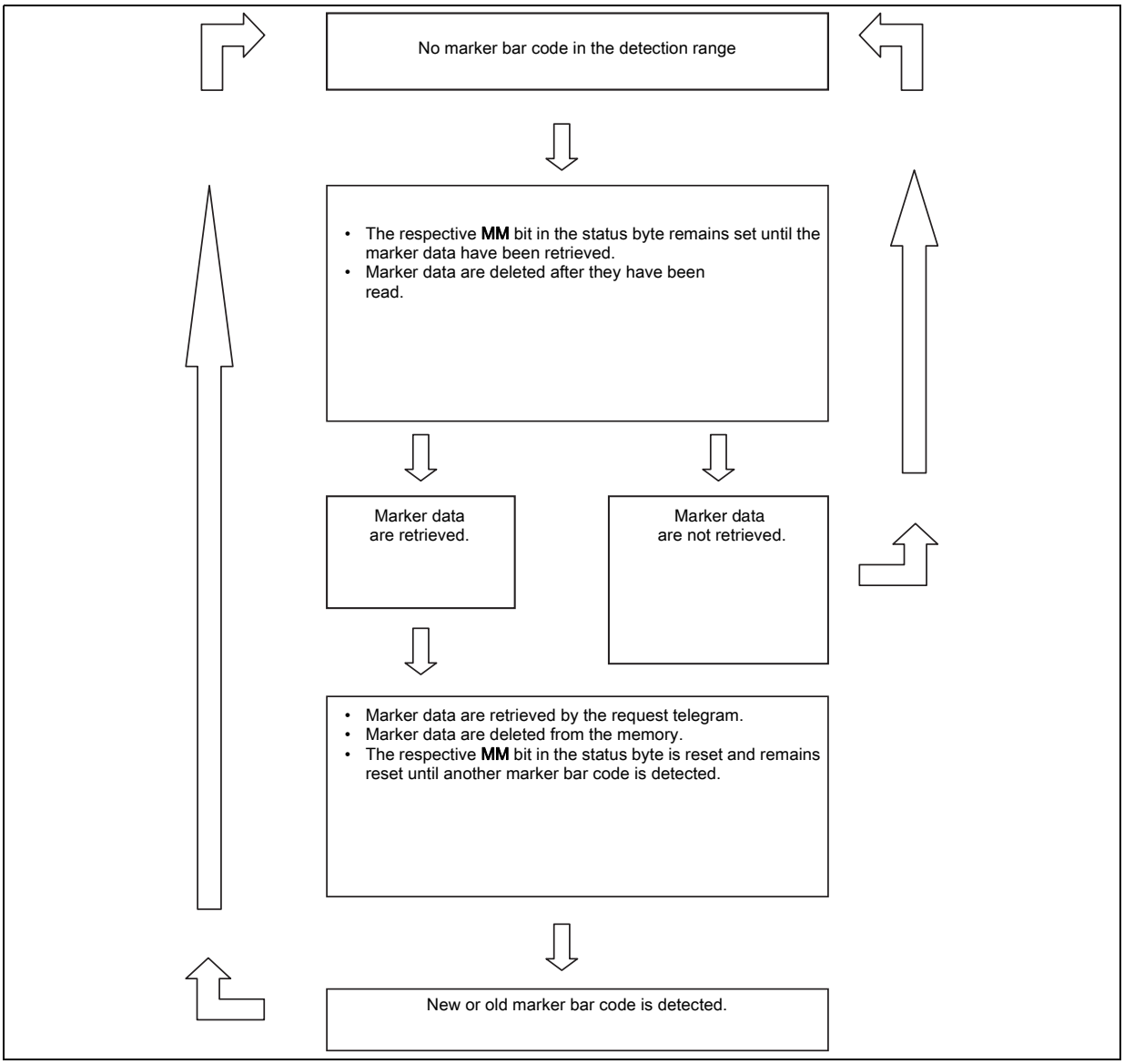

Figure 9.2: Function sequence for no marker bar code inside the detection area

Diagnostic data

If the diagnostic bit **D** in the status byte is set to 1, diagnostic data is present and may be retrieved.

The diagnostic data are retrieved by setting the bit **D** (bit 0) in the request byte. The diagnostic bit **D** remains set to 1 as long as data are present. Only after the memory for diagnostic data is empty, the bit changes to 0 and the red status LED returns to normal mode.

Like the marker data, the diagnostic data are output as an ASCII hex value in the data bytes 2 … 4.

Data byte 2: First diagnostic data character

Data byte 3: Second diagnostic data character

Data byte 4: Third diagnostic data character

Possible diagnostic data:

E01 = interface problem

E02 = motor problem

E03 = laser problem

E04 = internal problem

E05 = position value outside of measurement range

E09 = invalid control bar code

NOTE
If bit 2 **SLEEP** is set to 1 in the request byte and in the status byte bit 2 **D** has the value 1, BPS 8 is in Standby mode (SLEEP – laser and polygon wheel motor off). If bit 2 **SLEEP** in the control byte is set to 0, the BPS 8 returns to positioning mode after a boot time of approx. 5s. If polling takes place while the BPS 8 boots and there is no valid position data yet, the error message **No decodable bar code** (bit **OUT**) is generated.

Example: output of diagnostic data

Diagnostic data: **E05**

Data byte 2 = **E** = 45_h = 01000101_b

Data byte 3 = **0** = 30_h = 00110000_b

Data byte 4 = **5** = 35_h = 00110101_b

Byte no.	Designation	Bit 7	Bit 6	Bit 5	Bit 4	Bit 3	Bit 2	Bit 1	Bit 0
0	Status byte	0	Q1	Q0	SLEEP	MM	D	OUT	ERR
1	Data byte 1	0	0	0	0	0	0	0	0
2	Data byte 2	0	1	0	0	0	1	0	1
3	Data byte 3	0	0	1	1	0	0	0	0
4	Data byte 4	0	0	1	1	0	1	0	1
5	XOR combination	Exclusive OR combination of bytes 0 to 4							

9.2 Binary protocol 2 – BPS 8 SM 10x-02

NOTE
With the **BPS Configuration Tool**, the user can individually adapt the binary protocols 1 and 6 to the specific requirements of the application. The binary protocols 2, 3 and 4, on the other hand, have a fixed structure and cannot be modified.

9.2.1 Data format

Data format	BPS 8 SM 10x-02
Baud rate	62.5 kBit/s
Number of data bits	9
Number of start bits	1
Number of stop bits	1
Parity	None
Addressing	0 … 3
Operating mode	RS232 half duplex
Handshake	None

Table 9.2: BPS 8 SM 10x-02 data format

9.2.2 Request telegram to the BPS 8 SM 10x-02

The request telegram consists of one byte.

Request telegram structure

Byte no.	Designation	Bit 8	Bit 7	Bit 6	Bit 5	Bit 4	Bit 3	Bit 2	Bit 1	Bit 0
0	Request byte	1	0	1	1	S2	S1	S0	A1	A0

Description

Byte	Bit	Name	Function	Description			
0	0	A0	Address A1A0 in RS 485 network	00 = Address 0			
				01 = Address 1			
	1	A1		10 = Address 2			
				11 = Address 3			
	2	S0	Coded data request through the 3 bits S2, S1, S0	Coded request			
				S2	S1	S0	Meaning
	3	S1		0	0	0	Request position data
				0	0	1	Request marker data
	4	S2		0	1	0	Request diagnostic data
				1	0	0	Request one-time position data transfer
	5	–	None	Without function, bit permanently set to 1			
	6	–	None	Without function, bit permanently set to 1			
	7	–	None	Without function, bit permanently set to 0			
	8	–	None	Without function, bit permanently set to 1			

NOTE

A0 and **A1** are the address bits. If several BPS 8 operate in an RS485 network, an address configuration is required. Every BPS 8 is supplied with the **Standard address 0**. The address assignment (Default: 0) is performed using the **BPS Configuration Tool** (see chapter 8.5.3 "Communication").

NOTE

RS485 network!

An MA 8-01/MA 8-02 connection unit is mandatory for the operation of the BPS 8 in an RS485 network (see chapter 4.2 "MA 8-01 / MA 8-02 connection unit").

Bits **S2, S1, S0**: If all bits are set to 0, the position data are output.
The position data request cycle must be greater than 10 ms. If no position data request occurs within 10 s, the laser is deactivated. A response telegram is sent to a repeat position data request after approx. 30 ms.

If only the **S0** bit is set to 1, the marker data are output.

If only the **S1** bit is set to 1, the diagnostic data are sent in response. An indicated error is reset once all diagnostic data has been polled. This is indicated by the status LED changing from red to green.

If only the **S2** bit is set to 1, position data are output once (laser on – measurement – laser off).
The response telegram to the single measurement request is sent after around 40 ms.
The single measurement request cycle must be greater than 40 ms.

NOTE

Only ever one of the **S2, S1, S0** bits should be set in the request byte, because the BPS can only respond to one request. If several bits are set, the function with the highest priority is executed.

Priority of the bits in the request byte:

- Priority 1: Diagnostic data request
- Priority 2: Marker data request
- Priority 3: Request for one-time transmission of position data
- Priority 4: Position data request

9.2.3 BPS 8 SM 10x-02 response telegram

The response telegram consists of 8 bytes.

Response telegram structure

Byte no.	Designation	Bit 8	Bit 7	Bit 6	Bit 5	Bit 4	Bit 3	Bit 2	Bit 1	Bit 0
0	Status byte	0	D	M	A1	A0	QT1	QT0	OUT	ERR
1	Data byte 1	0	P23	P22	P21	P20	P19	P18	P17	P16
2	Data byte 2	0	P15	P14	P13	P12	P11	P10	P09	P08
3	Data byte 3	0	P07	P06	P05	P04	P03	P02	P01	P00
4	XOR combination	Bitwise exclusive OR combination of bytes 0 to 3								
5	Repetition of data byte 1	0	P23	P22	P21	P20	P19	P18	P17	P16
6	Repetition of data byte 2	0	P15	P14	P13	P12	P11	P10	P09	P08
7	Repetition of data byte 3	0	P07	P06	P05	P04	P03	P02	P01	P00

Description

Byte	Bit	Name	Function	Description
0	0	ERR	Internal error	1 = An internal error has occurred
				0 = No error exists
	1	OUT	Tape error	1 = No bar code decodable
				0 = Bar code decodable
	2	QT0	Reading quality Q1Q0	00 = Reading quality > 75%
				01 = Reading quality 75% … 50%
	3	QT1		10 = Reading quality 50% … 25%
				11 = Reading quality < 25%
	4	A0	Address A1A0 in RS 485 network	00 = Address 0
				01 = Address 1
	5	A1		10 = Address 2
				11 = Address 3
	6	M	Marker data exists	1 = Marker data are in the memory
				0 = No marker data in the memory
	7	D	Diagnostic data exist	1 = Diagnostic data are present in the memory
				0 = No diagnostic data exists
	8	–	None	Without function, bit permanently set to zero
1…3	0…8	Data, P23 … P 00	Data	Depending on the request, the data is transferred here; either position data, diagnostic data or marker data.
4	0…8	XOR	XOR combination	Bitwise exclusive OR combination of bytes 0 to 3
5…7	0…8	Data, P23 … P 00	Data resend	Depending on the request, the data is transferred here; either position data, diagnostic data or marker data.

Marker bar code

If information consisting of two of the capital letters A / B / C / D / E / F / G and one digit is read, the **M** bit for the recognition of a marker bar code is set in the status byte:

0 = No marker data in the memory.
1 = Marker data in the memory.

The data content of the marker bar code can now be retrieved in the request telegram using the request bit **S0**. If the data content of the marker bar code is not requested, the position continues to be output.

The marker data are output as an ASCII hex value in the data bytes 1 … 3.

Data byte 1: First marker bar code character (capital letter **A, B, C, D, E, F, G**)

Data byte 2: Second marker bar code character (capital letter **A, B, C, D, E, F, G**)
Data byte 3: Third marker bar code character (digit **1**)

NOTE

If no marker data are present in the memory of the BPS 8 and there is a marker data request, **E00** is transmitted.

NOTE

For more detailed information on marker bar codes, see see chapter 5.3 "Marker bar codes" on see page 22.

Example: output of marker data

Marker bar code: **AA1**

Data byte 1= **A** = 41_h = 001000001_b

Data byte 2= **A** = 41_h = 001000001_b

Data byte 3= **1** = 31_h = 000110001_b

Byte no.	Designation	Bit 8	Bit 7	Bit 6	Bit 5	Bit 4	Bit 3	Bit 2	Bit 1	Bit 0
0	Status byte	0	D	M	A1	A0	QT1	QT0	OUT	ERR
1	Data byte 1	0	0	1	0	0	0	0	0	1
2	Data byte 2	0	0	1	0	0	0	0	0	1
3	Data byte 3	0	0	0	1	1	0	0	0	0
4	XOR combination	Bitwise exclusive OR combination of bytes 0 to 3								
5	Repetition of data byte 1	0	0	1	0	0	0	0	0	1
6	Repetition of data byte 2	0	0	1	0	0	0	0	0	1
7	Repetition of data byte 3	0	0	0	1	1	0	0	0	1

Function sequence if a marker is inside the detection area:

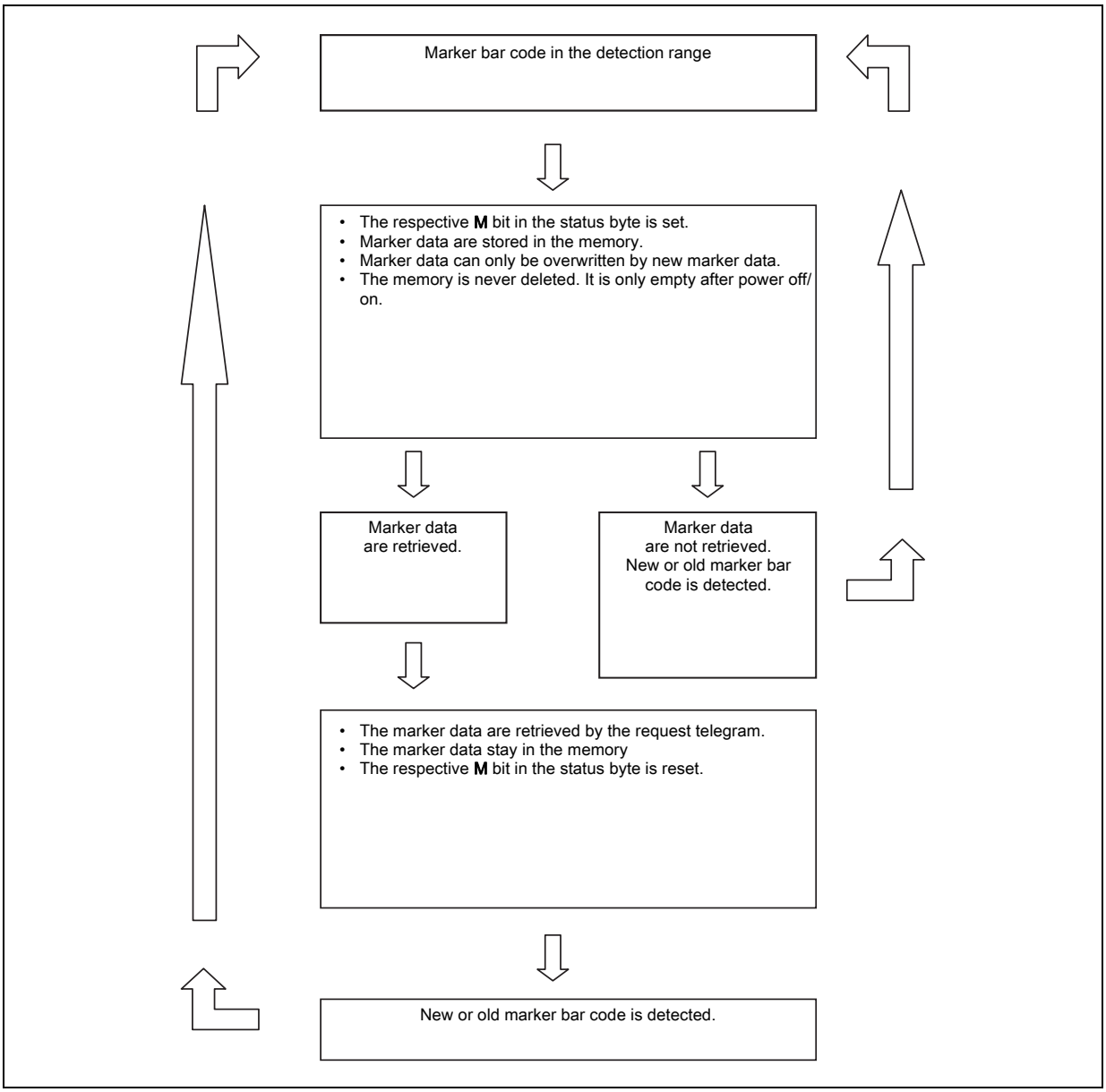

Figure 9.3: Function sequence for marker bar code inside the detection area

This process toggles the **M** bit in the status byte as long as there is a marker in the detection range. The marker information does not depend on the BPS' speed or on the control's clock rate.

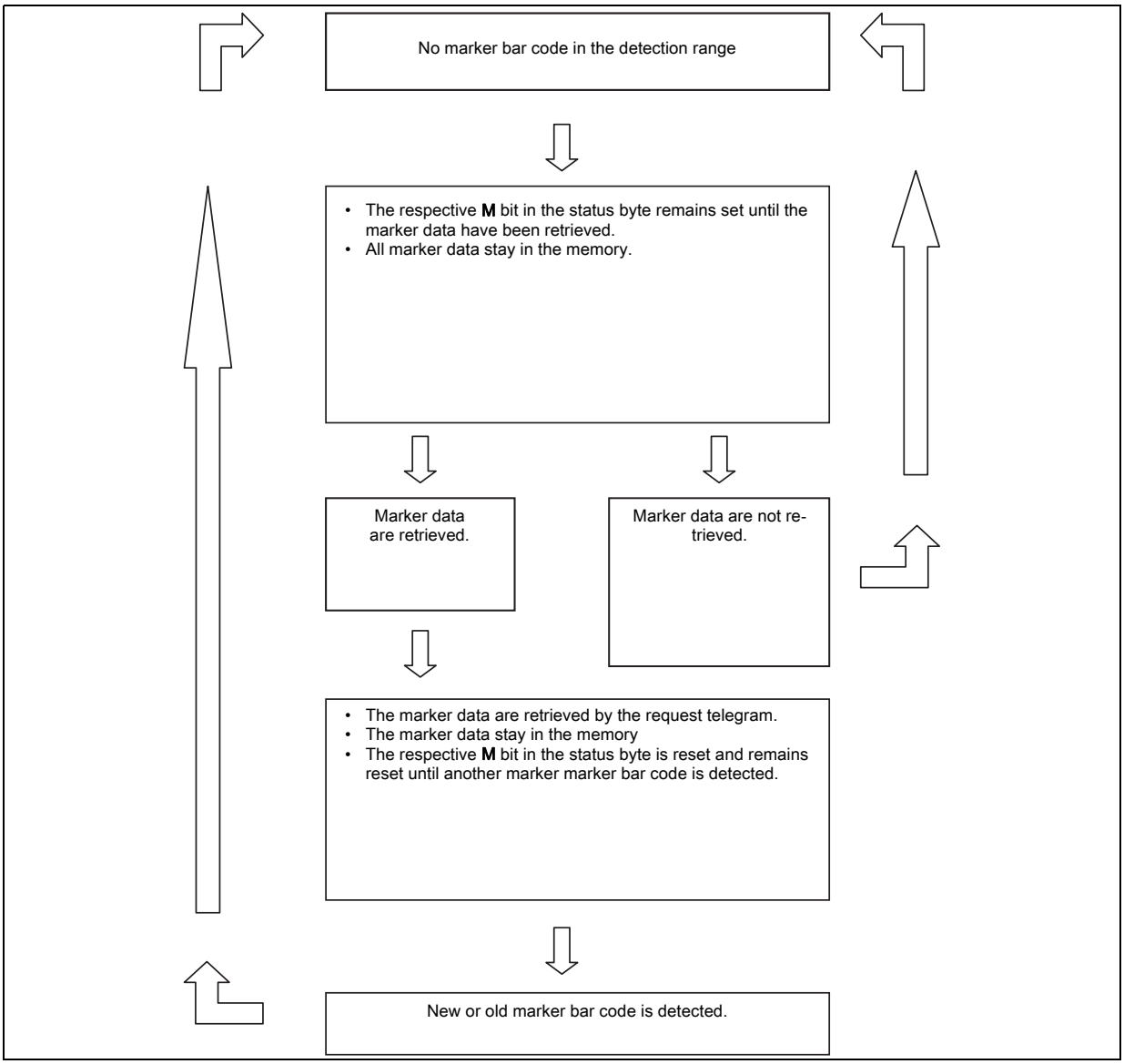

Figure 9.4: Function sequence for no marker bar code inside the detection area

Diagnostic data

If the diagnostic bit **D** in the status byte is set to 1, diagnostic data is present and may be retrieved.

By setting the bit **S1** (bit 3) in the request byte, the diagnostic data are retrieved. The diagnostic bit **D** remains set to 1 as long as data are present. Only after the memory for diagnostic data is empty, the bit changes to 0 and the red status LED returns to normal mode.

Like the marker data, the diagnostic data are output as an ASCII hex value in the data bytes 1 … 3.

Data byte 1: First diagnostic data character

Data byte 2: Second diagnostic data character

Data byte 3: Third diagnostic data character

Possible diagnostic data:

E01 = interface problem

E02 = motor problem

E03 = laser problem

E04 = internal problem

E05 = position data outside of measurement range

E09 = invalid control bar code

Example: output of diagnostic data

Diagnostic data: **E05**

Data byte 2 = **E** = 45_h = 001000101_b
Data byte 3 = **0** = 30_h = 000110000_b
Data byte 4 = **5** = 35_h = 000110101_b

Byte no.	Designation	Bit 8	Bit 7	Bit 6	Bit 5	Bit 4	Bit 3	Bit 2	Bit 1	Bit 0
0	Status byte	0	D	M	A1	A0	QT1	QT0	OUT	ERR
1	Data byte 1	0	0	1	0	0	0	1	0	1
2	Data byte 2	0	0	0	1	1	0	0	0	0
3	Data byte 3	0	0	0	1	1	0	1	0	1
4	XOR combination	Bitwise exclusive OR combination of bytes 0 to 3								
5	Repetition of data byte 1	0	0	1	0	0	0	1	0	1
6	Repetition of data byte 2	0	0	0	1	1	0	0	0	0
7	Repetition of data byte 3	0	0	0	1	1	0	1	0	1

9.3 Binary protocol 3 – BPS 8 SM 10x-03

NOTE

With the **BPS Configuration Tool**, the user can individually adapt the binary protocols 1 and 6 to the specific requirements of the application. The binary protocols 2, 3 and 4, on the other hand, have a fixed structure and cannot be modified.

9.3.1 Data format

Data format	BPS 8 SM 10x-03
Baud rate	19.2 kBit/s
Number of data bits	8
Number of start bits	1
Number of stop bits	1
Parity	Straight
Addressing	0 … 3
Operating mode	RS232 half duplex
Handshake	None

Table 9.3: BPS 8 SM 10x-03 data format

9.3.2 Request telegram to the BPS 8 SM 10x-03

The request telegram consists of one byte.

Request telegram structure

Byte no.	Designation	Bit 7	Bit 6	Bit 5	Bit 4	Bit 3	Bit 2	Bit 1	Bit 0
0	Request byte	CMD	F2	F1	F0	0	0	A1	A0

Description

Byte	Bit	Name	Function				Description
0	0	A0	Address A1A0 in RS 485 network	00 = Address 0			
				01 = Address 1			
	1	A1		10 = Address 2			
				11 = Address 3			
	2	–	None	Without function, bit permanently set to 0			
	3	–	None	Without function, bit permanently set to 0			
	4	F0	Coded data request through the 3 bits F2, F1, F0	Coded request			
				F2	F1	F0	Meaning
	5	F1		0	0	0	Request position data
				0	0	1	Request diagnostic data
	6	F2		1	0	0	Activate Standby mode
	7	CMD	Command flag				1 = valid request. The request byte is evaluated.
							0 = invalid request. The request byte is not evaluated.

NOTE

A0 and **A1** are the address bits. If several BPS 8 operate in an RS 485 network, an address configuration is required. Every BPS 8 is supplied with the **Standard address 0**. The address assignment (Default: 0) is performed using the **BPS Configuration Tool** (see chapter 8.5.3 "Communication").

NOTE

RS485 network!

An MA 8-01/MA 8-02 connection unit is mandatory for the operation of the BPS 8 in an RS485 network (see chapter 4.2 "MA 8-01 / MA 8-02 connection unit").

Bit **F0**: If this bit is set to 0, the position data is output.
The request cycle must be greater than 10 ms. If no position data request occurs within 10 s, the laser is deactivated. A response telegram is sent to a repeat position data request after approx. 30 ms.

If this bit is set to 1, the diagnostic data are sent in response. An indicated error is reset once all diagnostic data has been polled. This is indicated by the status LED changing from red to green.

Bit **F2**: If this bit is set to 1, the Standby mode is activated.
The polygon wheel motor and the laser are switched off in Standby. Diagnosis of the read system cannot be performed. When the device is reactivated (bit **F2** = 0), the system start-up time is approx. 5 s.

NOTE

Only ever one of the **F2** and **F0** bits should be set in the request byte, because the BPS can only respond to one request. If several bits are set, the function with the highest priority is executed.

Priority of the bits in the request byte:

- Priority 1: Diagnostic data request
- Priority 2: Standby request
- Priority 3: Position data request

9.3.3 BPS 8 SM 10x-03 response telegram

The response telegram consists of 5 bytes.

Response telegram structure

Byte no.	Designation	Bit 7	Bit 6	Bit 5	Bit 4	Bit 3	Bit 2	Bit 1	Bit 0
0	Status byte	0	SLEEP	A1	A0	CALC	DB	OUT	ERR
1	Data byte 1	0	P20	P19	P18	P17	P16	P15	P14
2	Data byte 2	0	P13	P12	P11	P10	P09	P08	P07
3	Data byte 3	0	P06	P05	P04	P03	P02	P01	P00
4	XOR combination	Bitwise exclusive OR combination of bytes 0 to 3							

Description

Byte	Bit	Name	Function	Description
0	0	ERR	Internal error	1 = An internal error has occurred
				0 = No error exists
	1	OUT	Tape error	1 = No bar code decodable
				0 = Bar code decodable
	2	DB	Diagnostic response flag	0 = No diagnostic data
				1 = The data bytes contain the diagnostic data
	3	CALC	Position/diagnostic data flag	1 = Response to request for position or diagnostic data
	4	A0	Address A1A0 in RS 485 network	00 = Address 0
				01 = Address 1
	5	A1		10 = Address 2
				11 = Address 3
	6	SLEEP	Standby state	1 = Device is in Standby mode (see request telegram)
				0 = Device is in positioning mode
	7	–	None	Without function, bit permanently set to zero
1…3	0…8	Data, P20 … P 00	Data	Depending on the request, the data is transferred here; either position data, diagnostic data or marker data.
4	0…8	XOR	XOR combination	Bitwise exclusive OR combination of bytes 0 to 3

In the response to a position data request, the bits **CALC**, **DB** and **SLEEP** are set as follows:

- **CALC** = 1
- **DB** = 0
- **SLEEP** = 0

Diagnostic data

By setting the bit **F0** in the request byte (bit 3), the diagnostic data are requested.

If at this point the diagnostic bit **DB** in the status byte is set to 1, the data in the data bytes correspond to the diagnostic data.

In the response to a diagnostic data request, the bits **CALC**, **DB** and **SLEEP** are set as follows:

- **CALC** = 1
- **DB** = 1
- **SLEEP** = 0

The diagnostic data are output as an ASCII hex value in the data bytes 1 … 3.

Data byte 1: First diagnostic data character

Data byte 2: Second diagnostic data character

Data byte 3: Third diagnostic data character

Possible diagnostic data:

E01 = interface problem

E02 = motor problem

E03 = laser problem

E04 = internal problem

E05 = position data outside of measurement range

E09 = invalid control bar code

Example: output of diagnostic data

Diagnostic data: **E05**
Data byte 1 = **E** = 45_h = 01000101_b
Data byte 2 = **0** = 30_h = 00110000_b
Data byte 3 = **5** = 35_h = 00110101_b

Byte no.	Designation	Bit 7	Bit 6	Bit 5	Bit 4	Bit 3	Bit 2	Bit 1	Bit 0
0	Status byte	0	SLEEP =0	A1	A0	CALC= 1	DB=1	OUT	ERR
1	Data byte 1	0	1	0	0	0	1	0	1
2	Data byte 2	0	0	1	1	0	0	0	0
3	Data byte 3	0	0	1	1	0	1	0	1
4	XOR combination	Bitwise exclusive OR combination of bytes 0 to 3							

Standby mode

NOTE

If bit **SLEEP** (bit 6) in status byte is set to 1, the BPS is in Standby mode. In a diagnostic response during Standby mode, the bits **CALC**, **DB** and **SLEEP** are set as follows:

- **CALC** = 0
- **DB** = 0
- **SLEEP** = 1

In Standby mode, the data bits **P00** to **P20** are always 0.

9.4 Binary protocol 4 – BPS 8 SM 10x-04

NOTE

With the **BPS Configuration Tool**, the user can individually adapt the binary protocols 1 and 6 to the specific requirements of the application. The binary protocols 2, 3 and 4, on the other hand, have a fixed structure and cannot be modified.

9.4.1 Data format

Data format	BPS 8 SM 10x-04
Baud rate	62.5 kBit/s
Number of data bits	9
Number of start bits	1
Number of stop bits	1
Parity	None
Addressing	0 … 3
Operating mode	RS232 half duplex
Handshake	None

Table 9.4: BPS 8 SM 10x-04 data format

9.4.2 Request telegram to the BPS 8 SM 10x-04

The request telegram consists of 6 bytes.

Request telegram structure

Byte no.	Designation	Bit 8	Bit 7	Bit 6	Bit 5	Bit 4	Bit 3	Bit 2	Bit 1	Bit 0
0	Target address (BPS)	1	AZ7	AZ6	AZ5	AZ4	AZ3	AZ2	AZ1	AZ0
1	Source address (host)	0	AQ7	AQ6	AQ5	AQ4	AQ3	AQ2	AQ1	AQ0
2	Length (without checksum)	0	L7	L6	L5	L4	L3	L2	L1	L0

Byte no.	Designation	Bit 8	Bit 7	Bit 6	Bit 5	Bit 4	Bit 3	Bit 2	Bit 1	Bit 0
3	Function identifier	0	F7	F6	F5	F4	F3	F2	F1	F0
4	Control byte	0	S7	S6	S5	S4	S3	S2	S1	S0
5	Checksum	Bitwise exclusive OR combination of bytes 0 … 4								

Description

Byte	Bit	Name	Function	Description
0	0…7	**AZ0** … **AZ7**	Target address of the BPS in the RS 485 network	Permissible address range: 2_d … 255_d, default address = 81_d
	8	–	None	Without function, bit permanently set to 1
1	0…7	**AQ0** … **AQ7**	Source address of the host in the RS 485 network	Permissible source addresses: 1_d or 129_d
	8	–	None	Without function, bit permanently set to 0
2	0…7	**L0** … **L7**	Length	Length of the response telegram (number of data bytes + status byte), **permissible value: 5_d** (4 data bytes +1 status byte in the response)
	8	–	None	Without function, bit permanently set to 0
3	0…7	**F0** … **F7**	Function identifier	The function identifier describes the action which should be executed in the BPS and answered: 90_d ($5A_h$) = Request position data 91_d ($5B_h$) = Request one-time transmission of position data 92_d ($5C_h$) = Activate positioning mode
	8	–	None	Without function, bit permanently set to 0
4	0…7	**S0** … **S7**	Control byte	For future function extensions. **Not currently evaluated**.
	8	–	None	Without function, bit permanently set to 0
5	0…8	Check-sum	Check sum	Bitwise exclusive OR combination of bytes 0 … 4

NOTE

AZ0 … **AZ7** are the address bits. If several BPS 8 operate in an RS 485 network, an address configuration is required. Every BPS 8 is supplied with the **Standard address 81_d**. The address assignment (Default: 81_d) is performed using the **BPS Configuration Tool** (see chapter 8.5.3 "Communication").

NOTE

RS485 network!

An MA 8-01/MA 8-02 connection unit is mandatory for the operation of the BPS 8 in an RS485 network (see chapter 4.2 "MA 8-01 / MA 8-02 connection unit").

Function identifier

In the request telegram, which function should be executed in the device is signaled to the BPS in the bits **F0** to **F7**. The function identifier is entered in the response telegram. If the function identifiers is defined, the BPS executes the desired function and sends the associated response telegram to the control. The following function identifiers are currently defined:

90_d ($5A_h$): **Request position data**:
Activates positioning mode when this is deactivated. Once a position value is available, it is sent to the control. Positioning mode remains active, and is only deactivated after 10 s. If a position value is requested once again within these 10 s, positioning mode remains active (retrigger).

- Response time with deactivated positioning mode:
  ≤ 4 ms with BUSY response (see diagnostic data)
- Response time with activated positioning mode:
  ≤ 4 ms
- Minimum request interval: 10 ms
- Maximum request interval for retrigger: 10 s

91_d ($5B_h$): **Request one-time transmission of position data**:
Activates positioning mode; determines and sends position data once. Positioning mode is subsequently deactivated (laser on – measurement – laser off).

- Response time with deactivated positioning mode:
  ≤ 40 ms
- Response time with activated positioning mode:
  ≤ 4 ms
- Minimum request interval: 40 ms

92_d ($5C_h$): **Activate positioning mode**:
Activates positioning mode; the BUSY response is sent immediately. The bits **DIA0** to **DIA3** (see diagnostic data) and the bit **OUT** are set to 1 in the status byte of the response telegram. 0 is sent as a position value.
If a request is sent after approx. 35 ms with the function identifier "Request position data" or "Request one-time transmission of position data", this request is answered with a response time of ≤ 4 ms.

9.4.3 BPS 8 SM 10x-04 response telegram

The response telegram consists of 10 byte.

Response telegram structure

Byte no.	Designation	Bit 8	Bit 7	Bit 6	Bit 5	Bit 4	Bit 3	Bit 2	Bit 1	Bit 0
0	Target address (BPS)	1	AZ7	AZ6	AZ5	AZ4	AZ3	AZ2	AZ1	AZ0
1	Source address (host)	0	AQ7	AQ6	AQ5	AQ4	AQ3	AQ2	AQ1	AQ0
2	Length (without checksum)	0	L7	L6	L5	L4	L3	L2	L1	L0
3	Function identifier	0	F7	F6	F5	F4	F3	F2	F1	F0
4	Status byte	0	DIA3	DIA2	DIA1	DIA0	Q1	Q0	RNG	OUT
5	Data byte 0	0	P31	P30	P29	P28	P27	P26	P25	P24
6	Data byte 1	0	P23	P22	P21	P20	P19	P18	P17	P16
7	Data byte 2	0	P15	P14	P13	P12	P11	P10	P09	P08
8	Data byte 3	0	P07	P06	P05	P04	P03	P02	P01	P00
9	Checksum	Bitwise exclusive OR combination of bytes 0 to 3								

Description

Byte	Bit	Name	Function	Description
0	0…7	**AZ0** … **AZ7**	Target address of the host in the RS 485 network	Permissible source addresses: 1_d or 129_d
	8	–	None	Without function, bit permanently set to 1
1	0…7	**AQ0** … **AQ7**	Source address of the BPS in the RS 485 network	Permissible address range: 2_d … 255_d, default address = 81_d
	8	–	None	Without function, bit permanently set to 0
2	0…7	**L0** … **L7**	Length	Length of the response telegram (number of data bytes + status byte), **Value permanently at 5_d** (4 data bytes + 1 status byte)
	8	–	None	Without function, bit permanently set to 0

Byte	Bit	Name	Function	Description
3	0…7	**F0 … F7**	Function identifier	The function identifier describes the action which is executed by the BPS and answered: 90_d ($5A_h$) = Request position data 91_d ($5B_h$) = Request one-time transmission of position data 92_d ($5C_h$) = Activate positioning mode
	8	–	None	Without function, bit permanently set to 0
4	0	**OUT**	Tape error	1 = No bar code decodable
				0 = Bar code decodable
	1	**RNG**	Measurement range error	1 = Configured measurement range exceeded/under-shot (Measurement range default: 0 … 10,000 m, no nega-tive values)
				0 = Position values within the configured measurement range
	2	**Q0**	Reading quality Q1Q0	00 = Reading quality > 75%
				01 = Reading quality 75% … 50%
	3	**Q1**		10 = Reading quality 50% … 25%
				11 = Reading quality < 25%
	4…7	**DIA0 … DIA3**	Diagnostic informa-tion	These 4 bits contain coded diagnostic data (see following description)
	6	**SLEEP**	Standby state	1 = Device is in Standby mode (see request telegram)
				0 = Device is in positioning mode
	7	–	None	Without function, bit permanently set to zero
5…8	0…7	**Data, P31 … P 00**	Data	The position data are transmitted here following a posi-tion data or single data request
	8	–	None	Without function, bit permanently set to zero
9	0…8	**Check-sum**	XOR combination	Bitwise exclusive OR combination of bytes 0 to 8

Position data

The position data are output **in two's complement** as a **32-bit signed integer** value by default in millimeters with a resolution of 1 mm (see chapter 8.5.2 "Position detection")

NOTE

The **P00** data bit corresponds to the **LSB**, the **P31** data bit corresponds to the **MSB**.

Function identifier

See request telegram, See "Function identifier" on page 78.

Diagnostic data

The 4 bits **DIA0** to **DIA3** contain coded diagnostic data:

0000 (0_d) = No diagnostic data exist
0001 (1_d) = Interface error
0010 (2_d) = Motor error
0011 (3_d) = Laser error
0100 (4_d) = Internal error
0101 (5_d) = Request contains invalid data
0110 (6_d) … 1110 (14_d) = Not currently used
1111 (15_d) = Activation of positioning mode running (**BUSY**)

9.4.4 Binary protocol 4 request sequences

Cyclical request of position data

The simplest request sequence is the cyclical request with the function identifier **90_d ($5A_h$) Request position data**. An answer is sent within 4 ms.

With positioning mode enabled, the response contains the defined status information and the position data. If no valid position data can be determined, the status bit **OUT** is set to 1.

If positioning mode is deactivated, the BUSY response is sent; i.e. the bits **DIA0** to **DIA3** and the bit **OUT** are set to 1 in the status byte of the response telegram. 0 is sent as a position value.

Requesting a one-time transmission of position data

In order to obtain as short a response time as possible, the following sequence must be performed with positioning mode deactivated:

- Request telegram is sent with the function identifier **92_d ($5C_h$) Activate positioning mode**.
- The BPS activates positioning mode and sends the defined BUSY response within 4 ms.
- After ≥ 35 ms, a request telegram is sent with the function identifier **91_d ($5B_h$) Request one-time transmission of position data**.
- Position data are present in the BPS, and the response telegram is sent within 4 ms. Positioning mode is automatically deactivated.

This sequence is especially suited to position data determination over long distances; i.e. where position data are required at greater time intervals (100 ... 1,000 ms) and with reduced precision.

Advantages:

- Due to the combination of the requests **Activate positioning mode** and **Request one-time transmission of position data**, a response is sent within 4 ms. With request cycle times of ≥ 35 ms, an alternating request from **Activate positioning mode** and **Request one-time transmission of position data** can be implemented.
- The BPS does not work permanently in positioning mode for requests with the function identifier **Request one-time transmission of position data**.

Disadvantages:

- The polling sequence must be actively controlled in the control.

Behavior in the event of errors

If no current position data can be determined, the last valid position value will continue to be transmitted, and the status bit **OUT** is set to 1.

In the event of protocol errors (e.g. incorrect target address, length, checksum), the request telegram is discarded and no response is sent.

In the event of incorrect data (e.g. incorrect function identifier) and a correct telegram structure, the telegram is answered. In the response telegram, the unsupported function is entered and the position value 0 is sent.

The BPS 8 currently switches the laser off after a request pause of 10 s; i.e. if no valid request is sent to the BPS 8 during this time, the position measurement is stopped. If the BPS 8 receives a valid request once more, the laser is switched on and position measurement is activated. Approx. 30 ms lapse until the request is answered.

9.5 Binary protocol 6 – BPS 8 SM 10x-10

NOTE	
	With the **BPS Configuration Tool**, the user can individually adapt the binary protocols 1 and 6 to the specific requirements of the application. The binary protocols 2, 3 and 4, on the other hand, have a fixed structure and cannot be modified.

9.5.1 Data format

Data format	BPS 8 SM 10x-10
Baud rate	115.2 kBit/s
Number of data bits	8
Number of start bits	1
Number of stop bits	1
Parity	None
Addressing	None
Operating mode	RS 232 full duplex
Handshake	None

Table 9.5: BPS 8 SM 10x-10 data format

9.5.2 Request telegram to the BPS 8 SM 10x-10

The request telegram consists of two bytes.

Request telegram structure

Byte no.	Designation	Bit 7	Bit 6	Bit 5	Bit 4	Bit 3	Bit 2	Bit 1	Bit 0
0	Request byte	0	0	0	0	ON	OFF	0	DIAG
1	XOR combination	Exclusive OR combination of byte 0 with 00_h (repetition of the request byte)							

Description

Byte	Bit	Name	Function	Description
0	0	DIAG	Request diagnostic information	1 = Request diagnostic data
				0 = Do not request diagnostic data
	1	–	None	Without function, bit permanently set to 0
	2	OFF	Deactivate measurement operation	1 = Deactivate measurement operation and cyclical measurement value output
				0 = No function
	3	ON	Activate measurement operation	1 = Activate measurement operation and cyclical measurement value output
				0 = No function
	4…7	–	None	Without function, bit permanently set to 0
1	0	XOR	XOR combination	Exclusive OR combination of byte 0 with 00_h

Bit **ON**: If this bit is set to 1, measurement operation and the **cyclical** output of position data are activated. The position data are transmitted cyclically from the BPS.

Bit **OFF**: If this bit is set to 1, measurement operation is deactivated and the **cyclical** output of data is stopped. If measurement operation and the **cyclical** output of position data are re-activated, the boot time is 5 s.

Bit **DIAG**: If this bit is set to 1, diagnostic data can be requested. An indicated error is reset once all diagnostic data has been polled. This is indicated by the status LED changing from red to green.

NOTE

It is advisable to set only one bit in the request byte, as the BPS can only answer one request at a time. If several bits are set, the function with the highest priority is executed.

Priority of the bits in the request byte:

- Priority 1: Diagnostic data request (DIAG)
- Priority 2: Deactivate cyclical output of position data and measurement operation (OFF)
- Priority 3: Activate cyclical output of position data and measurement operation (ON)

9.5.3 BPS 8 SM 10x-10 response telegram

The response telegram consists of 6 bytes.

Response telegram structure

Byte no.	Designation	Bit 7	Bit 6	Bit 5	Bit 4	Bit 3	Bit 2	Bit 1	Bit 0
0	Status byte	0	Q1	Q0	0	0	DIB	OUT	ERR
1	Data byte 1	P31	P30	P29	P28	P27	P26	P25	P24
2	Data byte 2	P23	P22	P21	P20	P19	P18	P17	P16
3	Data byte 3	P15	P14	P13	P12	P11	P10	P09	P08
4	Data byte 4	P07	P06	P05	P04	P03	P02	P01	P00
5	XOR combination	Bitwise exclusive OR combination of bytes 0 to 4							

Description

Byte	Bit	Name	Function	Description
0	0	**ERR**	Internal error	1 = An internal error has occurred
				0 = No error exists
	1	**OUT**	Tape error	1 = No bar code decodable
				0 = Bar code decodable
	2	**DIB**	Diagnostic data exist	1 = Diagnostic data are present in the memory
				0 = No diagnostic data exists
	3	–	None	Without function, bit permanently set to zero
	4	–	None	Without function, bit permanently set to zero
	5	**Q0**	Reading quality Q1Q0	00 = Reading quality > 75%
				01 = Reading quality 75% … 50%
	6	**Q1**		10 = Reading quality 50% … 25%
				11 = Reading quality < 25%
	7	–	None	Without function, bit permanently set to zero
1…4	0…7	**Data, P31 … P 00**	Data	Depending on the request, the data are transferred here; either position data, diagnostic data, marker data or SLEEP response.
5	0…7	**XOR**	XOR combination	Bitwise exclusive OR combination of bytes 0 to 4

Position data

The position data are output **in two's complement** as a **32-bit signed integer** value by default in millimeters with a resolution of 1 mm (see chapter 8.5.2 "Position detection")

NOTE

The **P00** data bit corresponds to the **LSB**, the **P31** data bit corresponds to the **MSB**.

Diagnostic data

If the diagnostic bit **DIB** in the status byte is set to 1, diagnostic data are present and may be retrieved.

By setting the bit **DIAG** (bit 0) in the request byte, the diagnostic data are retrieved. The diagnostic bit **DIB** remains set to 1 as long as data are present. Only after the memory for diagnostic data is empty, the bit changes to 0 and the red status LED returns to normal mode.

The diagnostic data is output as an ASCII hex value in the data bytes 2 … 4.

Data byte 2: First diagnostic data character

Data byte 3: Second diagnostic data character

Data byte 4: Third diagnostic data character

Possible diagnostic data:

E01 = interface problem

E02 = motor problem

E03 = laser problem

E04 = internal problem

E05 = position data outside of measurement range

E09 = invalid control bar code

NOTE	
	If bit 2 **OFF** is set to 1 in the request byte and in the status byte bit 2 **DIB** has the value 1, BPS 8 is in Standby mode (laser and polygon wheel motor off). If bit 2 **OFF** is set to 0 in the request byte, the BPS 8 returns to positioning mode after a boot time of approx. 5 s. If polling takes place while the BPS 8 boots and there is no valid position data yet, the error message **No decodable bar code** (bit **OUT**) is generated.

Example: output of diagnostic data

Diagnostic data: **E05**

Data byte 2 = **E** = 45_h = 01000101_b

Data byte 3 = **0** = 30_h = 00110000_b

Data byte 4 = **5** = 35_h = 00110101_b

Byte no.	Designation	Bit 7	Bit 6	Bit 5	Bit 4	Bit 3	Bit 2	Bit 1	Bit 0
0	Status byte	0	Q1	Q0	0	0	DIB	OUT	ERR
1	Data byte 1	0	0	0	0	0	0	0	0
2	Data byte 2	0	1	0	0	0	1	0	1
3	Data byte 3	0	0	1	1	0	0	0	0
4	Data byte 4	0	0	1	1	0	1	0	1
5	XOR combination	Exclusive OR combination of bytes 0 to 4							

10 Diagnostics and troubleshooting

10.1 Operating indicators of the LEDs

Two 3-color-LEDs at the top of the BPS 8 case show the device and reading status (see dimensioned drawings see page 13 et seq.).

	LED	State	Meaning
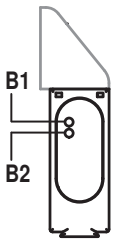	Status LED (B1)	Off	No supply voltage
		Green, flashing	Initialization of the device
		Green, continuous light	Operational readiness
		Red, flashing	Warning
		Red, continuous light	Error, no function possible
		Orange, flashing	Service operation active
	Decode LED (B2)	Off	Positioning deactivated
		Green, continuous light	Positioning running (position data valid)
		Red, continuous light	Positioning running (position data invalid)
		Orange, continuous light	Positioning running (marker bar code detected)

10.2 General causes of errors

Error	Possible error cause	Measures
Status LED "off"	• No supply voltage connected to the device.	☐ Check supply voltage.
Status LED "Red, flashing"	• Warning.	☐ Query diagnostic data and carry out the resulting measures.
Status LED "Red, continuous light"	• Error, no function possible.	☐ Internal device error, send in device
Status LED "Orange, flashing"	• Service operation active.	☐ Reset service operation using BPS Configuration Tool.
Decode LED "off"	• Positioning deactivated.	☐ Call up position data. ☐ Deactivate SLEEP mode
Decode LED "Red, continuous light"	• Position data invalid (out of tape).	☐ Check positioning of bar code tape. ☐ Change the angle of the scanning beam by tilting the BPS 8. ☐ Check mounting. ☐ Clean BPS 8 window.
Decode LED "Orange, continuous light"	• Marker bar code detected.	☐ Call up marker bar code.
Position error	• No bar code tape exists. • Scanner positioned in total reflec-tion. • Scanner not properly mounted.	☐ Check positioning of bar code tape. ☐ Change the angle of the scanning beam by tilting the BPS 8. ☐ Check mounting. ☐ Clean BPS 8 window.

10.3 Error on the interface

Error	Possible error cause	Measures
No communication via RS 232/RS 485	• Incorrect wiring. • Different baud rates. • Different protocol settings.	☐ Check wiring. ☐ Check baud rate. ☐ Check protocol settings.
Sporadic errors on the RS 232/RS 485 interface	• Incorrect wiring. • Effects due to EMC. • Overall network expansion exceeded.	☐ Check wiring, in particular the shield of the wiring. ☐ Check the cable used. ☐ Check shielding (shield covering in place up to the clamping point). ☐ Check grounding concept and connection to FE. ☐ Check max. network expansion as a function of the max. cable lengths.

11 Maintenance

Usually, the BPS 8 does not require any maintenance by the operator.

11.1 Cleaning

In the event of dust build-up, clean the optical window with a soft cloth; use a cleaning agent (commercially available glass cleaner) if necessary.

Also check the bar code tape for possible soiling.

CAUTION	
	No solvents, no acetone! ↳ Do not use solvents or cleaning agents containing acetone for cleaning! Use of improper cleaning agents can damage the optical window.

11.2 Repairs, servicing

Repairs to the device must only be carried out by the manufacturer.

↳ Contact your Leuze distributor or service organization should repairs be required.
The addresses can be found at www.leuze.com.

↳ When sending devices to Leuze electronic for repair, please provide an accurate description of the error.

11.3 Disassembling, packing, disposing

Repacking

For later reuse, the device is to be packed so that it is protected.

NOTE	
	Electrical scrap is a special waste product! Observe the locally applicable regulations regarding disposal of the product.

12 Type overview and accessories

12.1 Type overview: BPS 8

Part no.	Type designation	Description
50104783	BPS 8 SM 102-01	Front beam exit, M12 connector, presetting: **binary protocol 1** with baud rate 57.6 kBit/s
50104784	BPS 8 SM 100-01	Lateral beam exit, M12 connector, presetting: **binary protocol 1** with baud rate 57.6 kBit/s
50104785	BPS 8 SM 102-02	Front beam exit, M12 connector, **binary protocol 2**
50104786	BPS 8 SM 100-02	Lateral beam exit, M12 connector, **binary protocol 2**
50104787	BPS 8 SM 102-03	Front beam exit, M12 connector, **binary protocol 3**
50104788	BPS 8 SM 100-03	Lateral beam exit, M12 connector, **binary protocol 3**
50106812	BPS 8 SM 102-04	Front beam exit, M12 connector, **binary protocol 4**
50106813	BPS 8 SM 100-04	Lateral beam exit, M12 connector, **binary protocol 4**
50107325	BPS 8 SM 102-05	Front beam exit, M12 connector, presetting: **binary protocol 1** with baud rate 19.2 kBit/s
50107326	BPS 8 SM 100-05	Lateral beam exit, M12 connector, presetting: **binary protocol 1** with baud rate 19.2 kBit/s
50137879	BPS 8 SM 102-10	Front beam exit, M12 connector, presetting: **binary protocol 6**

12.2 Type overview: Bar code tape

12.2.1 Standard bar code tapes

Leuze offers a wide selection of standardized bar code tapes.

- These are available in grid dimensions of 30 mm (BCB G30 ...) and 40 mm (BCB G40 ...).
- Standard tapes always begin with the tape value 0 and are available in length increments of 10 m in lengths from 5 m/10 m up to 150 m/200 m.
- Standard tapes are available in heights of 47 mm and 25 mm.
- Standard tapes are printed below the bar code with the corresponding position value.

The tapes are wound and delivered on a core.

All available standard tapes are listed on the Leuze website under the respective, selected BPS product under the "Accessories" heading.

12.2.2 Special tapes

Special tapes are produced according to customer specifications.

A special tape is characterized by the following features:

- The initial value as well as the final value of the tape (dependent on the BCB G30 ... or BCB G40 ... grid dimension) according to customer specifications.
- Special tapes are printed below the bar code with the corresponding position value.
- Tape heights are available in millimeter increments in the range from 20 mm to 140 mm.
- The maximum tape length is 10,000 m, the maximum position value is 9999.99 m.
- Special tapes longer than 300 m are delivered wound on multiple rolls.

An entry wizard is available for special tapes on the Leuze website under the "BPS 8 - Accessories" heading. The entry wizard provides support when entering the individual pieces of tape data and creates a query or order form with the correct part number and type designation.

12.2.3 Twin tapes

Twin tapes are special tapes and are produced according to customer specifications.

A twin special tape is characterized by the following features:

- Two identical tapes are delivered in one package. The tape values as well as the tape tolerances are identical on both tapes. The tapes are printed with the position value in plain text below and above the bar code.
- The initial value as well as the final value of the tape (dependent on the BCB G30 ... or BCB G40 ... grid dimension) according to customer specifications.
- Tape heights are available in millimeter increments in the range from 20 mm to 140 mm.
- The maximum tape length is 10,000 m, the maximum position value is 9999.99 m.
- Twin special tapes longer than 300 m are delivered wound on multiple rolls.

An entry wizard is available for twin special tapes on the Leuze website under the "BPS 8 - Accessories" heading. The entry wizard provides support when entering the individual pieces of tape data and creates a query or order form with the correct part number and type designation.

12.2.4 Repair tapes

Repair tapes are produced according to customer specifications.

A repair tape is characterized by the following features:

- The initial value as well as the final value of the tape (corresponding to the BCB G30 ... or BCB G40 ... grid dimension) according to customer specifications.
- The maximum tape length of a repair tape is 5 m. Repair tapes longer than 5 m must be ordered as a special tape.
- Repair tapes are available in tape heights of 47 mm and 25 mm.
- Repair tapes are printed below the bar code with the corresponding position value.
- Repair tapes are usually delivered wound on a roll.

An entry wizard is available for repair tapes on the Leuze website under the "BPS 8 - Accessories" heading. The entry wizard provides support when entering the individual pieces of tape data and creates a query or order form with the correct part number and type designation.

12.2.5 Marker labels and control labels

Leuze offers a selection of standardized marker and control labels

- Marker or control labels are available in a grid dimension of 30 mm (BCB G30 ...) and 40 mm (BCB G40 ...).
- Marker or control labels are available in a height of 47 mm.
- Control label BCB ... MVS, base color red
- Control label BCB ... MV0, base color yellow
- Marker label BCB ... ML base color red
- Marker labels and control labels are individual labels that are delivered in a packaging unit containing 10 pieces.

All available marker and control labels are listed on the Leuze website under the respective, selected BPS product under the "Accessories" heading.

12.3 Accessories – Modular connection unit

Part no.	Type designation	Description
50101699	MA 8.1	Connection unit **with RS 232 interface** for BPS 8, M12 connector, operating voltage 10 … 30VDC
50104790	MA 8-01	Connection unit **with RS 485 interface** for BPS 8, M12 connector, operating voltage 10 … 30VDC, termination network 390Ω / 220Ω / 390Ω
50104789	MA 8-02	Connection unit **with RS 485 interface** for BPS 8, M12 connector, operating voltage 10 … 30VDC, termination network 47kΩ / 150Ω / 47kΩ

12.4 Accessories – Fieldbus gateway

Part no.	Type designation	Description
50112893	MA 204*i*	PROFIBUS DP gateway
50112892	MA 208*i*	Ethernet TCP/IP gateway
50114154	MA 235*i*	CANopen
50114155	MA 238*i*	EtherCAT
50112891	MA 248*i*	PROFINET-IO RT gateway
50114156	MA 255*i*	DeviceNet
50114157	MA 258*i*	EtherNet/IP

12.5 Accessories – Cables

Part no.	Type designation	Description
50133888	KDS S-M12-5A-M12-5A-P1-010	Interconnection cable, 5-wire, M12 connector, straight (A-coded) to M12 socket, straight (A-coded), shielded, 1m
50133890	KDS S-M12-5A-M12-5A-P1-020	Interconnection cable, 5-wire, M12 connector, straight (A-coded) to M12 socket, straight (A-coded), shielded, 2m
50133891	KDS S-M12-5A-M12-5A-P1-030	Interconnection cable, 5-wire, M12 connector, straight (A-coded) to M12 socket, straight (A-coded), shielded, 3m
50133882	KDS S-M12-5A-M12-5W-P1-010	Interconnection cable, 5-wire, M12 connector, angled (A-coded) to M12 socket, straight (A-coded), shielded, 1m
50133883	KDS S-M12-5A-M12-5W-P1-020	Interconnection cable, 5-wire, M12 connector, angled (A-coded) to M12 socket, straight (A-coded), shielded, 2m
50133884	KDS S-M12-5A-M12-5W-P1-030	Interconnection cable, 5-wire, M12 connector, angled (A-coded) to M12 socket, straight (A-coded), shielded, 3m
50133861	KD S-M12-5A-P1-100	Connection cable, 5-wire, M12 socket, straight (A-coded), open cable end, shielded, 10m
50113467	KD JST-M12A-5P-3000	Interconnection cable, 5-wire, M12 socket, straight (A-coded) to JST connector, shielded, 3m, for connection to MA2xxi
50102971	KB 008-10000-A-S	Connection cable, 5-wire, M12 connector, straight (A-coded), open cable end, shielded, 10m
50101941	KB 008-3000-A-S	Connection cable, 5-wire, M12 connector, straight (A-coded), open cable end, shielded, 3m
50020501	KD 095-5A	M12 socket, 5-pin, straight (A-coded), with screw terminals
50040097	KD 01-5-BA	M12 socket, 5-pin, straight (A-coded), with screw terminals, gold-plated contacts
50020502	KD 095-5	M12 socket, 5-pin, angled (A-coded), with screw terminals
50040098	KD 01-5-SA	M12 connector, 5-pin, straight (A-coded), with screw terminals (for MA 8…)
50101943	KD 01-5-SR	M12 connector, 5-pin, angled (A-coded), with screw terminals (for MA 8…)

12.6 Accessories – Mounting device

Part no.	Type designation	Description
50104791	BT 8-01	Mounting bracket
50036196	BT 8-0	Mounting clamp for dovetail on the device, screw connection on the system

12.7 Accessories - Configuration software

NOTE	
	The current version of the **BPS Configuration Tool** can be downloaded from the Leuze home page at **www.leuze.com**.

ПРОМЭЛЕКТРОНИКА / sales@prom-elec.com

13 Appendix

13.1 EC Declaration of Conformity

The bar code positioning systems of the BPS 8 series have been developed and manufactured in accordance with the applicable European standards and directives.

The manufacturer of the product, Leuze electronic GmbH + Co. KG in D-73277 Owen, possesses a certified quality assurance system in accordance with ISO 9001.