Leuze electronic

the sensor people

SMART
SENSOR
BUSINESS

BCL 648i

Bar Code Reader

EN 2015/04 - 50126988
We reserve the right to
make technical changes

Original operating instructions

ПРОМЭЛЕКТРОНИКА / sales@prom-elec.com

© 2015
Leuze electronic GmbH + Co. KG
In der Braike 1
D-73277 Owen / Germany
Phone: +49 7021 573-0
Fax: +49 7021 573-199
http://www.leuze.com
info@leuze.de

1 About this document . . . 7
1.1 Used symbols and signal words . . . 7

2 Safety . . . 8
2.1 Intended use . . . 8
2.2 Foreseeable misuse . . . 8
2.3 Competent persons . . . 8
2.4 Exemption of liability . . . 9
2.5 Laser safety notices . . . 9
2.5.1 Laser safety notices– laser class 2 . . . 9

3 Device description . . . 12
3.1 Device overview . . . 12
3.2 Performance characteristics . . . 12
3.3 Device construction . . . 14
3.4 Connection technology . . . 15
3.5 Display elements . . . 15
3.5.1 Structure of the control panel . . . 15
3.5.2 Status display and operation . . . 16
3.5.3 LED indicators . . . 16
3.6 Operational controls . . . 17
3.7 External parameter memory . . . 18

4 Functions . . . 19
4.1 autoReflAct . . . 20
4.2 autoConfig . . . 21

5 Reading techniques . . . 22
5.1 Line scanner (single line) . . . 22
5.2 Line scanner with oscillating mirror . . . 22
5.3 Omnidirectional reading . . . 23
5.4 Leuze multiScan over Ethernet/PROFINET . . . 24

6 Mounting . . . 25
6.1 Device arrangement . . . 25
6.1.1 Selecting a mounting location . . . 25
6.1.2 Avoiding total reflection – Line scanner . . . 25
6.1.3 Avoiding total reflection – oscillating-mirror scanner . . . 26
6.1.4 Possible read angles between device and bar code . . . 27
6.2 Installing the external parameter memory . . . 27

7 Electrical connection . . . 29
7.1 Overview . . . 29
7.2 PWR – Voltage supply and switching inputs/outputs 3 and 4 . . . 30
7.3 SERVICE – USB interface (type A) . . . 32
7.4 SW IN/OUT – Switching input/switching output . . . 32
7.5 HOST / BUS IN . . . 34
7.6 BUS OUT . . . 35
7.7 PROFINET-IO topologies . . . 35
7.7.1 PROFINET-IO wiring . . . 37
7.8 Cable lengths and shielding . . . 37

8 Menu description . . . 38
8.1 The main menus . . . 38
8.2 Parameter menu . . . 38
8.3 Language selection menu . . . 45
8.4 Service menu . . . 45
8.5 Actions menu . . . 45
8.6 Operation . . . 47

9 Commissioning – Leuze electronic webConfig tool . . . 49
9.1 Connecting the service USB interface . . . 49
9.2 Installation . . . 49
9.2.1 System requirements . . . 49
9.2.2 Installing the USB driver . . . 49
9.3 Starting the webConfig tool . . . 49
9.4 Short description of the webConfig tool . . . 50
9.5 Module overview in the Configuration menu . . . 51

10 Starting up the device - Configuration . . . 53
10.1 General information on PROFINET-IO implementation . . . 53
10.1.1 PROFINET-IO communication profile . . . 54
10.1.2 Conformance Classes . . . 55
10.2 Measures to be performed prior to the initial commissioning . . . 55
10.3 Starting the device . . . 55
10.4 Configuration steps for a Siemens Simatic S7 control . . . 55
10.4.1 Step 1 – Preparing the control system (S7 PLC) . . . 55
10.4.2 Step 2 – Installation of the GSD file . . . 56
10.4.3 Step 3 – Hardware configuration of the S7 PLC: Configuration . . . 56
10.4.4 Step 4 – Transfer of the configuration to the IO controller (S7 PLC) . . . 57
10.4.5 Step 5 – Configuration of the device name - naming the device . . . 57
10.4.6 Step 6 – Check device names . . . 59
10.4.7 Ethernet host communication . . . 59
10.4.8 Manually setting the IP address . . . 60
10.4.9 Automatically setting the IP address . . . 60
10.4.10 Address Link Label . . . 61
10.4.11 TCP/IP . . . 61
10.4.12 UDP . . . 62
10.5 Commissioning via the PROFINET-IO . . . 63
10.5.1 General information . . . 63
10.5.2 Permanently defined parameters/device parameters . . . 63
10.6 Overview of the project modules . . . 66
10.7 Decoder modules . . . 69
10.7.1 Modules 1-4 – Code table extensions 1 to 4 . . . 69
10.7.2 Module 5 – Code type features (symbology) . . . 70
10.7.3 Module 7 – Code reconstruction technology . . . 71
10.8 Control modules . . . 72
10.8.1 Module 10 – Activations . . . 72
10.8.2 Module 11 – Reading gate control . . . 73
10.8.3 Module 12 – Multi-label . . . 74
10.8.4 Module 13 – Fragmented read result . . . 75
10.8.5 Module 14 – Interlinked read result . . . 76
10.9 Result Format . . . 76
10.9.1 Module 20 – Decoder state . . . 77
10.9.2 Modules 21-27 – Decoding result . . . 78
10.9.3 Module 30 – Data formatting . . . 79
10.9.4 Module 31 – Reading gate number . . . 80

10.9.5 Module 32 – Reading gate time . . . 80
10.9.6 Module 33 – Code position . . . 81
10.9.7 Module 34 – Reading reliability (equal scans) . . . 81
10.9.8 Module 35 – Bar code length . . . 82
10.9.9 Module 36 – Scans with information . . . 82
10.9.10 Module 37 – Decoding quality . . . 83
10.9.11 Module 38 – Code direction . . . 83
10.9.12 Module 39 – Number of digits . . . 83
10.9.13 Module 40 – Code type (symbology) . . . 84
10.9.14 Module 41 – Code position in the swivel range . . . 84

10.10 Data Processing . . . 85
10.10.1 Module 50 – Characteristics filter . . . 85
10.10.2 Module 51 – Data filtering . . . 86

10.11 Identifier . . . 87
10.11.1 Module 52 – Segmentation according to the EAN process . . . 87
10.11.2 Module 53 – Segmentation via fixed positions . . . 88
10.11.3 Module 54 – Segmentation according to identifier and separator . . . 90
10.11.4 Module 55 – String handling parameters . . . 91

10.12 Device Functions . . . 92
10.12.1 Module 60 – Device status . . . 92
10.12.2 Module 61 – Laser control . . . 93
10.12.3 Module 62 – Display . . . 93
10.12.4 Module 63 – Alignment . . . 94
10.12.5 Module 64 – Oscillating mirror . . . 95
10.12.6 Module 65 – Deflection mirror . . . 95

10.13 Switching inputs/ outputs SWIO 1 … 4 . . . 96
10.13.1 Parameters for operating as an output . . . 96
10.13.2 Parameters for operating as an input . . . 97
10.13.3 Switch-on and switch-off functions for operation as an output . . . 99
10.13.4 Input functions for operation as an input . . . 100
10.13.5 Module 70 – Switching input/output SWIO1 . . . 100
10.13.6 Module 71 – Switching input/output SWIO2 . . . 101
10.13.7 Module 72 – Switching input/output SWIO3 . . . 103
10.13.8 Module 73 – Switching input/output SWIO4 . . . 104
10.13.9 Module 74 – SWIO status and control . . . 105

10.14 Data output . . . 107
10.14.1 Module 80 – Sorting . . . 107

10.15 Reference code comparison . . . 108
10.15.1 Module 81 – Reference code comparator 1 . . . 108
10.15.2 Module 82 – Reference code comparator 2 . . . 109
10.15.3 Module 83 – Reference code comparison pattern 1 . . . 110
10.15.4 Module 84 – Reference code comparison pattern 2 . . . 111

10.16 Special Functions . . . 112
10.16.1 Module 90 – Status and control . . . 112
10.16.2 Module 91 – AutoReflAct (automatic reflector activation) . . . 113
10.16.3 Module 92 – AutoControl . . . 114
10.16.4 Module 100 – multiScan master . . . 114
10.16.5 Module 101 – multiScan slave addresses 1 . . . 116
10.16.6 Module 102 – multiScan slave addresses 2 . . . 117

10.17 Example configuration: Indirect activation via the PLC . . . 117
10.17.1 Task . . . 117
10.17.2 Procedure . . . 117

10.18 Sample configuration: Direct activation via the switching input . . . 118
10.18.1 Task . . . 118
10.18.2 Procedure . . . 118

11 Online commands 120
11.1 General online commands 120
11.2 Online commands for system control 125
11.3 Online commands for configuration of switching inputs/outputs 126
11.4 Online commands for the parameter set operations 128

12 Care, maintenance and disposal 136
12.1 Cleaning 136
12.2 Servicing 136
12.3 Disposing 136

13 Diagnostics and troubleshooting 137
13.1 General causes of errors 138
13.2 Interface errors 138

14 Service and support 140
14.1 What to do should servicing be required? 140

15 Technical data 141
15.1 General specifications 141
15.1.1 Line scanner 141
15.1.2 Oscillating-mirror scanner 142
15.2 Dimensioned drawings 144
15.3 Dimensioned drawings: Accessories 146
15.4 Reading field curves / optical data 147
15.5 Reading field curves 147
15.5.1 Medium Density (M) - optics 149
15.5.2 Low Density (F) - optics 150

16 Ordering information and accessories 152
16.1 Nomenclature 152
16.2 Type overview 152
16.3 Accessories 152

17 EC Declaration of Conformity 154

18 Appendix 155
18.1 ASCII character set 155
18.2 Bar code samples 159
18.2.1 Module 0.3 159
18.2.2 Module 0.5 160

1 About this document

1.1 Used symbols and signal words

Table 1.1: Warning symbols and signal words

⚠	Symbol indicating dangers to persons
NOTICE	Signal word for property damage Indicates dangers that may result in property damage if the measures for danger avoidance are not followed.

Table 1.2: Other symbols

ℹ	Symbol for tips Text passages with this symbol provide you with further information.
✎	Symbols for action steps Text passages with this symbol instruct you to perform actions.

Table 1.3: Terms and abbreviations

BCL	Bar code reader
CRT	Code reconstruction technology

2 Safety

This sensor was developed, manufactured and tested in line with the applicable safety standards. It corresponds to the state of the art.

2.1 Intended use

The device is designed as a stationary high-speed scanner with integrated decoder for all common bar codes for automatic object detection.

Areas of application

The device is specially designed for the following areas of application:

- Object identification on fast-moving conveyor lines
- Omnidirectional reading

⚠ CAUTION
Comply with conditions and regulations!
↳ Observe the locally applicable legal regulations and the rules of the employer's liability insurance association.

2.2 Foreseeable misuse

Any use other than that defined under “Intended use” or which goes beyond that use is considered improper use.

In particular, use of the device is not permitted in the following cases:

- Rooms with explosive atmospheres
- Circuits relevant to safety
- For medicinal purposes

⚠ CAUTION
Do not modify or otherwise interfere with the device.
↳ Do not carry out modifications or otherwise interfere with the device. The device must not be tampered with and must not be changed in any way. The device must not be opened. There are no user-serviceable parts inside. Repairs must only be performed by Leuze electronic GmbH + Co. KG.

2.3 Competent persons

Connection, mounting, commissioning and adjustment of the device must only be carried out by competent persons.

Prerequisites for competent persons:

- They have a suitable technical education.
- They are familiar with the rules and regulations for occupational safety and safety at work.
- They are familiar with the technical description of the device.
- They have been instructed by the responsible person on the mounting and operation of the device.

Certified electricians

Electrical work must be carried out by a certified electrician.

Due to their technical training, knowledge and experience as well as their familiarity with relevant standards and regulations, certified electricians are able to perform work on electrical systems and independently detect possible dangers.

In Germany, certified electricians must fulfill the requirements of accident-prevention regulations BGV A3 (e.g. electrician foreman). In other countries, there are respective regulations that must be observed.

2.4 Exemption of liability

Leuze electronic GmbH + Co. KG is not liable in the following cases:

- The device is not being used properly.
- Reasonably foreseeable misuse is not taken into account.
- Mounting and electrical connection are not properly performed.
- Changes (e.g., constructional) are made to the device.

2.5 Laser safety notices

2.5.1 Laser safety notices– laser class 2

ATTENTION, LASER RADIATION – LASERCLASS2

Never look directly into the beam!

The device fulfills the IEC 60825-1:2007 (EN 60825-1:2007) requirements for a product in **laser class 2** as well as the U.S. 21 CFR 1040.10 regulations with deviations corresponding to “Laser Notice No. 50” from June 24th, 2007.

- Never look directly into the laser beam or in the direction of reflecting laser beams.

  If you look into the beam path over a longer time period, there is a risk of injury to the retina.
- Do not point the laser beam of the device at persons!
- Interrupt the laser beam using a non-transparent, non-reflective object if the laser beam is accidentally directed towards a person.
- When mounting and aligning the device, avoid reflections of the laser beam off reflective surfaces!
- CAUTION! The use of operating or adjusting devices other than those specified here or carrying out of differing procedures may lead to dangerous exposure to radiation.
- Adhere to the applicable legal and local regulations regarding protection from laser beams.
- The device must not be tampered with and must not be changed in any way.

  There are no user-serviceable parts inside the device.

  Repairs must only be performed by Leuze electronic GmbH + Co. KG.

CAUTION

Affix laser information and warning signs!

Laser information and warning signs attached to the device(see figure 2.1). Also included with the device are self-adhesive laser warning and laser information signs (stick-on labels) in multiple languages (see figure 2.3).

- Affix the laser information sheet to the device in the language appropriate for the place of use.

  When using the device in the US, use the stick-on label with the “Complies with 21 CFR 1040.10” notice.
- Affix the laser information and warning signs near the device if no signs are attached to the device (e.g. because the device is too small) or if the attached laser information and warning signs are concealed due to the installation position.

  Affix the laser information and warning signs so that they are legible without exposing the reader to the laser radiation of the device or other optical radiation.

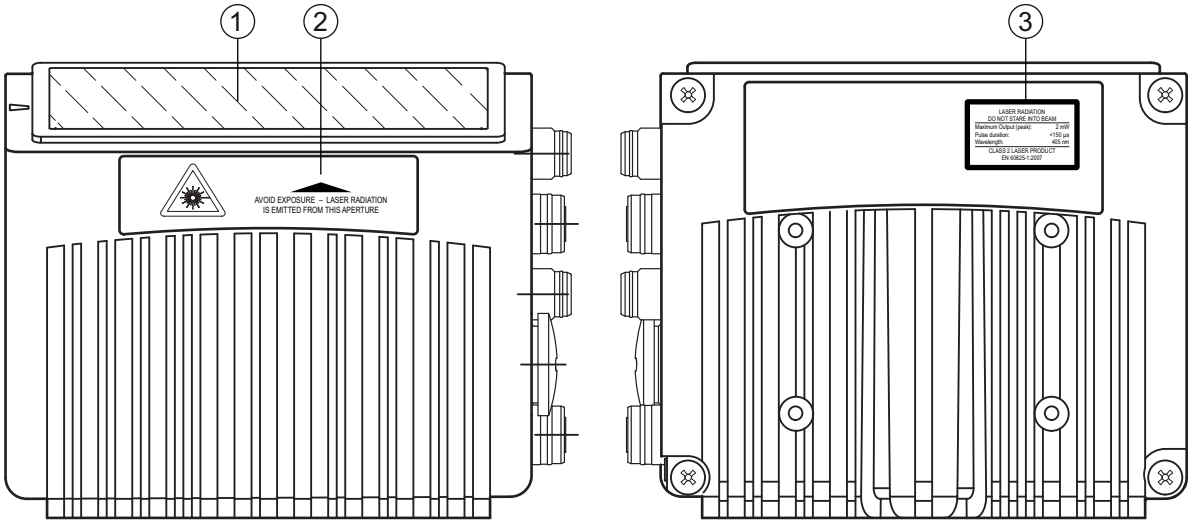

1 Laser aperture
2 Laser warning sign
3 Laser information sign with laser parameters

Figure 2.1: Laser aperture, laser warning and information signs - line scanner

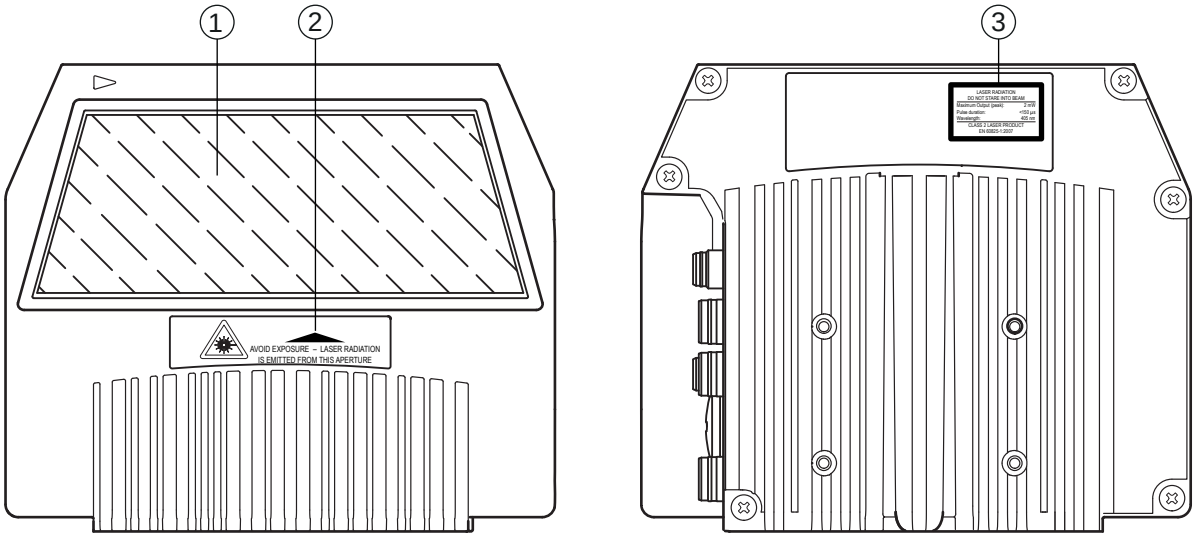

1 Laser aperture
2 Laser warning sign
3 Laser information sign with laser parameters

Figure 2.2: Laser aperture, laser warning and information signs - oscillating-mirror scanner

Figure 2.3: Laser warning and information signs – supplied stick-on labels

3 Device description

3.1 Device overview

Bar code readers of the BCL 600i series are high-speed scanners with integrated decoder for all commonly used bar codes, e.g. 2/5 Interleaved, Code 39, Code 128, EAN 8/13 etc., as well as codes from the GS1 DataBar family.

Bar code readers of the BCL 600i series are available in various optics models and as line scanners and oscillating mirrors.

1 Line scanner
2 Oscillating-mirror scanner

Figure 3.1: Line scanner and oscillating-mirror scanner

The extensive options for device configuration via display or software enable adaptation to a multitude of reading tasks. Due to the large reading distance combined with the great depth of field and a very compact construction, the device is ideally suited for package and pallet transportation systems. In general, the bar code readers of the BCL 600i series are designed for the conveyor and storage technology market.

The interfaces (RS 232, RS 485 and RS 422) integrated in the various device models and the fieldbus systems (Profibus DP, PROFINET-IO, Ethernet TCP/IP / UDP and Ethernet/IP) of the BCL 600i series bar code readers offer optimum connection to the superior host system.

3.2 Performance characteristics

- Integrated fieldbus connectivity = i -> Plug-and-Play fieldbus coupling and easy networking
- Numerous interface variants facilitate connection to the superior systems
  - RS 232, RS 422 as well as with integrated multiNet plus master
  - RS 485 and multiNet plus slave
  - alternatively, various fieldbus systems, such as
    PROFINET-IO
    Ethernet TCP/IP
    Ethernet /IP
    Profibus
    Ethernet

- Integrated code reconstruction technology (CRT) enables the identification of soiled or damaged bar codes
- Maximum depth of field and reading distances from 400 mm to 1450 mm
- Large optical opening angle and, thus, large reading field width
- High scanning rate of 800 / 1000 scans/s for fast reading tasks
- Intuitive, backlit, multi-language display with user-friendly menu navigation
- Integrated USB 1.1 service interface
- Adjustment of all device parameters with a web browser
- Connection options for an external parameter memory
- Easy alignment- and diagnostics functions
- M12 connections with Ultra-Lock ™ technology
- Four freely programmable switching inputs/outputs for the activation or signaling of states
- Automatic monitoring of the read quality with autoControl
- Automatic recognition and setting of the bar code type using autoConfig
- Reference code comparison
- Heavy-duty housing of degree of protection IP 65

3.3 Device construction

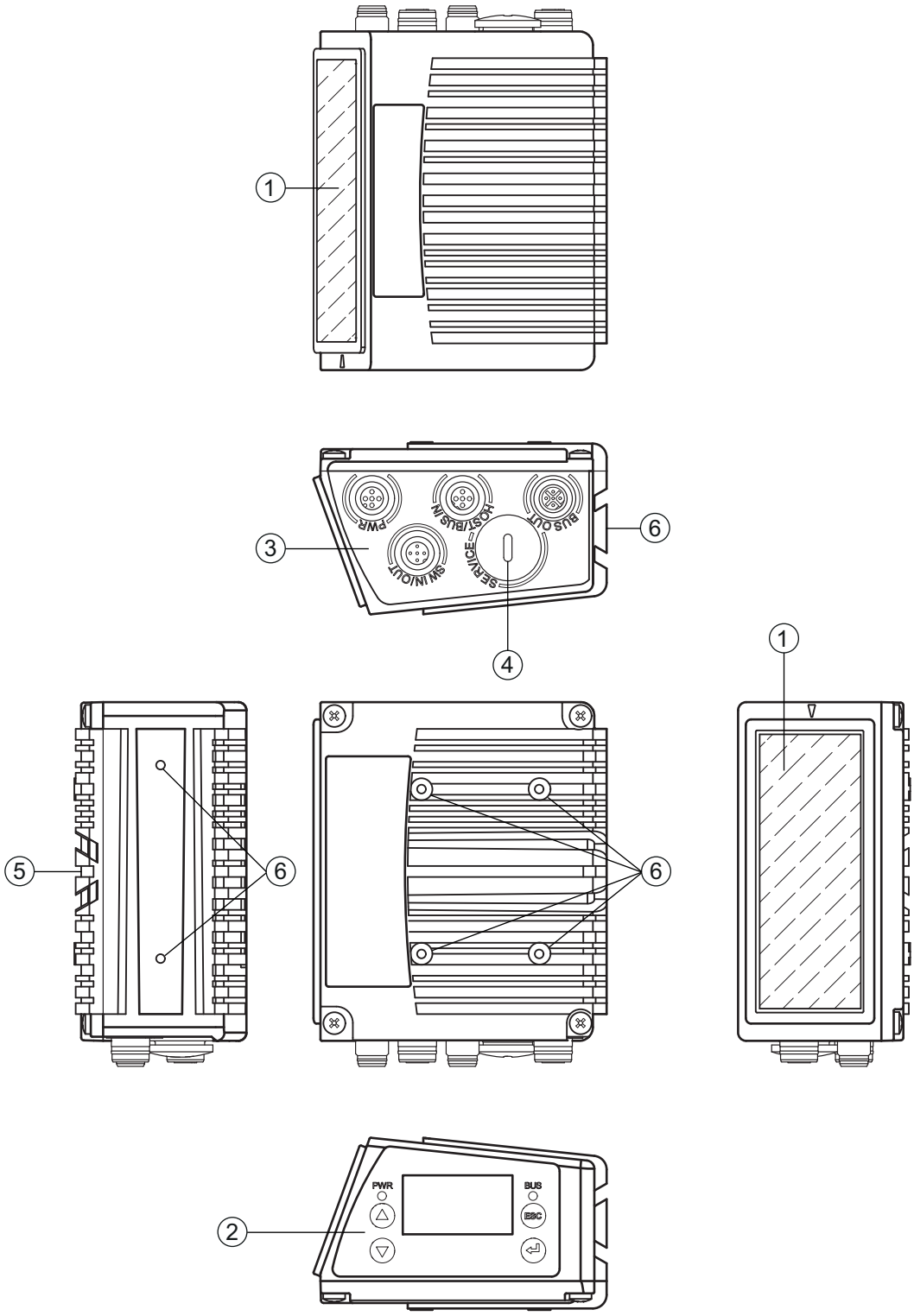

1 Reading window
2 Control panel with display, LEDs and buttons
3 M12 connection technology
4 USB interface
5 Dovetail mounting
6 M4 mounting thread

Figure 3.2: Device construction

3.4 Connection technology

The bar code readers are connected using variously coded M12 connectors. This ensures unique connection assignments.

The additional USB interface is used for configuring the device.

For the locations of the individual device connections, please refer to the device detail shown below.

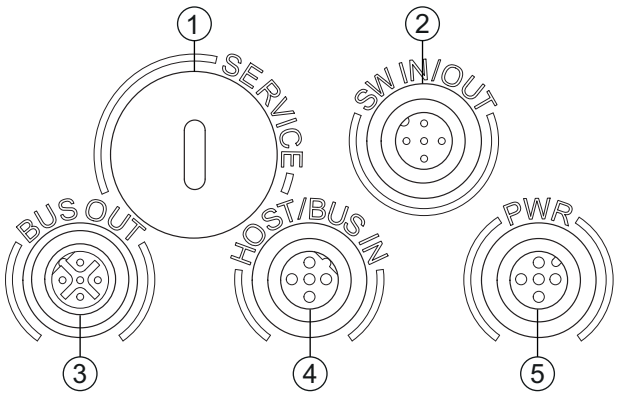

1 Service, USB socket, type A
2 SW In/Out, M12 socket (A-coded)
3 Bus Out, M12 socket (D-coded)
4 Host/Bus In, M12 socket (D-coded)
5 PWR, M12 plug (A-coded)

Figure 3.3: Location of the electrical connections

3.5 Display elements

3.5.1 Structure of the control panel

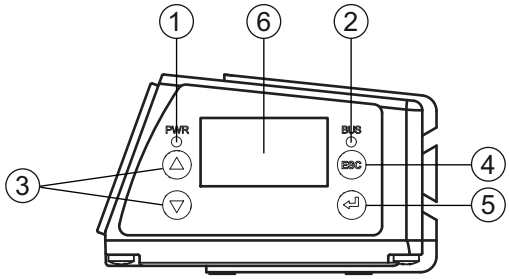

1 LED PWR
2 LED NET
3 Navigation buttons
4 Escape button
5 Enter button
6 Display

Figure 3.4: Structure of the control panel

3.5.2 Status display and operation

Indicators in the display

Table 3.1: Status displays of the switching inputs/outputs

IO1	Switching input or switching output 1 active (function dependent on set configuration). Default: Switching input with the “Reading gate activation” function
IO2	Switching input or switching output 2 active (function dependent on set configuration). Default: Input with the “Teach-in” function
IO3	Switching input or switching output 3 active (function dependent on set configuration). Default: Switching input with the “Reading gate activation” function
IO4	Switching input or switching output 4 active (function dependent on set configuration). Default: Switching output with the “No read” function
ATT	Warning (Attention)
ERR	Internal device error (Error) -> The device must be sent in for inspection

Bar graph

The read quality is described on a scale of 0 - 100 %. The quality is evaluated based on the “Equal Scans” of the read result configured in the bar code reader.

Table 3.2: Status display of the USB interface

USB	The device is connected to a PC via the USB interface.
MS	An external parameter memory is properly connected to the USB interface of the device.

Read result

The read bar code information is displayed.

Table 3.3: Link status of the PROFINET-IO interface

LNK0	physical connection to the HOST / BUS IN port
LNK1	physical connection to the BUS OUT port

3.5.3 LED indicators

PWR LED

Off	Device OFF • No supply voltage
Flashes green	Device ok, initialization phase • No bar code reading possible • Voltage connected • Self test running • Initialization running
Green, continuous light	Device OK • Bar code reading possible • Self test successfully finished • Device monitoring active

Orange, continuous light	Service mode • Bar code reading possible • Configuration via the USB service interface • Configuration via the display • No data on the host interface
Flashes red	Device ok, warning set • Bar code reading possible • Temporary operating fault
Red, continuous light	Device error / parameter enable • No bar code reading possible

NET LED

Off	No supply voltage • No communication possible • PROFINET-IO communication not initialized or inactive
Flashes green	Initialization • of the device, establishing communication
Green, continuous light	Operation OK • Network mode ok • Connection and communication to IO controller (PLC) established (data exchange)
Flashes red	Communication error • Parameterization or configuration failed (parameter failure) • IO error • No data exchange
Red, continuous light	Network error • No communication (protocol) to IO controller established (no data exchange)

3.6 Operational controls

Navigating within the menus

Use the navigation buttons ▲▼ to move through the menu. Activate the desired selection with the enter button ↵.

Press the escape button ESC to move up one menu level.

When one of the buttons is actuated, the display illumination is activated for 10 min.

Setting values

Set the desired value with the navigation buttons ▲▼ and the enter button ↵.

An accidental incorrect entry can be corrected by selecting the left arrow button and then pressing the enter button.

Then use the navigation buttons to select **save** and save the set value by pressing the enter button.

Selecting options

Set the desired option with the navigation buttons ▲▼ and the enter button ↵.

3.7 External parameter memory

The optionally available external parameter memory – based on a USB memory stick (compatible with version 1.1) – is housed in an external hood with integrated connectors which cover the USB service interface when installed (IP 65).

The external parameter memory makes it easy and reduces the time needed to replace a device on site by providing a copy of the current parameter set of the device and by storing the device name as well. This eliminates the need to configure the exchanged device manually and, in particular, to rename the device – the control can immediately access the exchanged device.

The delivery contents of the external parameter memory include the hood with integrated connectors with unscrewable cover and the USB memory stick.

To mount, the cover of the service interface must be unscrewed. Then take the USB memory stick and plug it into the USB connection on the device. Then, take the connector hood of the USB memory stick and screw this over the plugged-in USB memory stick to the service interface to close the system and ensure degree of protection IP 65.

4 Functions

General information

The integrated fieldbus connectivity = i contained in the bar code readers of the BCL 600i series facilitates the use of identification systems which function without connection unit or gateways. The integrated fieldbus interface considerably simplifies handling. The Plug-and-Play concept enables easy networking and very simple commissioning: Directly connect the respective fieldbus and all configuration is performed with no additional software.

For decoding bar codes, the bar code readers of the BCL 600i series make available the proven CRT decoder with code reconstruction technology:

The proven code reconstruction technology (CRT) enables bar code readers of the BCL 600i series to read bar codes with a small bar height, as well as bar codes with a damaged or soiled print image.

With the aid of the CRT decoder, bar codes can also be read without problem in other demanding situations, such as with a large tilt angle (azimuth angle or even twist angle).

Figure 4.1: Possible bar code orientation

With the BCL 648i, configuration is generally performed with the aid of the GSD file.

The device needs a suitable activation to start a read process as soon as an object is in the reading field. This opens a time window (reading gate) in the device for the read process during which the bar code reader has time to detect and decode a bar code.

In the basic setting, triggering takes place through an external reading cycle signal. Alternative activation options include online commands via the host interface and the autoReflAct function. In the basic setting, triggering takes place through an external reading cycle signal or via the PROFIBUS. An alternative option for activation is the autoReflAct function.

In the basic setting, triggering takes place through an external reading cycle signal. Alternative activation options include online commands via the host interface and the autoReflAct function. Through the read operation, the device collects additional useful pieces of data for diagnosis which can also be transmitted to the host. The quality of the read operation can be inspected using the alignment mode which is integrated in the webConfig tool.

A multi-language display with buttons is used to operate the device as well as for visualization purposes. Two LEDs provide additional optical information on the current operating state of the device.

The four freely configurable switching inputs/outputs SWIO 1 … SWIO 4 can be assigned various functions and control e.g. activation of the device or external devices, such as a PLC.

System, warning and error messages provide assistance in setup/troubleshooting during commissioning and read operation.

4.1 autoReflAct

autoReflAct stands for **auto**matic **Refl**ector **Act**ivation and permits an activation without additional sensors. This is achieved by directing the scanner with reduced scanning beam towards a reflector mounted behind the conveyor path. As long as the scanner is targeted at the reflector, the reading gate remains closed. If, however, the reflector is blocked by an object such as a container with a bar code label, the scanner activates the read procedure, and the label on the container is read. When the path from the scanner to the reflector has cleared, the read procedure has completed and the scanning beam is reduced and again directed onto the reflector. The reading gate is closed.

You will find a matching reflector in Accessories, and more are available on request.

Figure 4.2: Reflector arrangement for autoReflAct

The autoReflAct function uses the scanning beam to simulate a photoelectric sensor and thus permits an activation without additional sensors.

4.2 autoConfig

With the autoConfig function, the device offers an extremely simple and convenient configuration option to users who only want to read one code type (symbology) with one number of digits at a time.

After starting the autoConfig function via the display, switching input or from a superior control, it is sufficient to position a bar code label with the desired code type and number of digits in the reading field of the device.

Afterward, bar codes with the same code type and number of digits are recognized and decoded.

The settings made via display or webConfig configuration tool push the parameters set in the Profibus only temporarily into the background. They are overwritten during integration into the Profibus or when the parameter enable is deactivated!

Device settings for operating the device on the Profibus are managed and configured exclusively by the Profibus controller (PLC). Permanent changes must be carried out here!

For further information, see chapter 10 "Starting up the device - Configuration".

5 Reading techniques

5.1 Line scanner (single line)

A line (scan line) scans the label. Due to the opt. opening angle, the reading field width is dependent on the read distance. Through the movement of the object, the entire bar code is automatically transported through the scan line.

The integrated code reconstruction technology permits twisting of the bar code (tilt angle) within certain limits. These are dependent on the transport speed, the scanning rate of the scanner and the bar code properties.

Areas of application of the line scanner

The line scanner is used:

- when the bars of the bar code are printed in the conveying direction ('ladder arrangement').
- with bar codes having very short bar lengths.
- when the ladder code is turned out of the vertical position (tilt angle).
- when the reading distance is large.

Figure 5.1: Deflection principle for the line scanner

5.2 Line scanner with oscillating mirror

The oscillating mirror deflects the scan line additionally to both sides across the scan direction at a randomly adjustable oscillation frequency. In this way, the device can also scan larger areas or spaces for bar codes. The reading field height (and the scan line length useful for evaluation) depends on the reading distance due to the optical opening angle of the oscillating mirror.

Areas of application of the line scanner with oscillating mirror

For line scanners with oscillating mirror, oscillation frequency, start/stop position etc. are adjustable. It is used:

- when the position of the label is not fixed, e.g. on pallets – various labels can, thus, be detected at various positions.
- when the bars of the bar code are printed perpendicular to the conveying direction (“picket fence arrangement”).
- when reading stationary objects.
- when the bar code is turned out of the horizontal position.
- when the reading distance is large.
- when a large reading field (reading window) has to be covered.

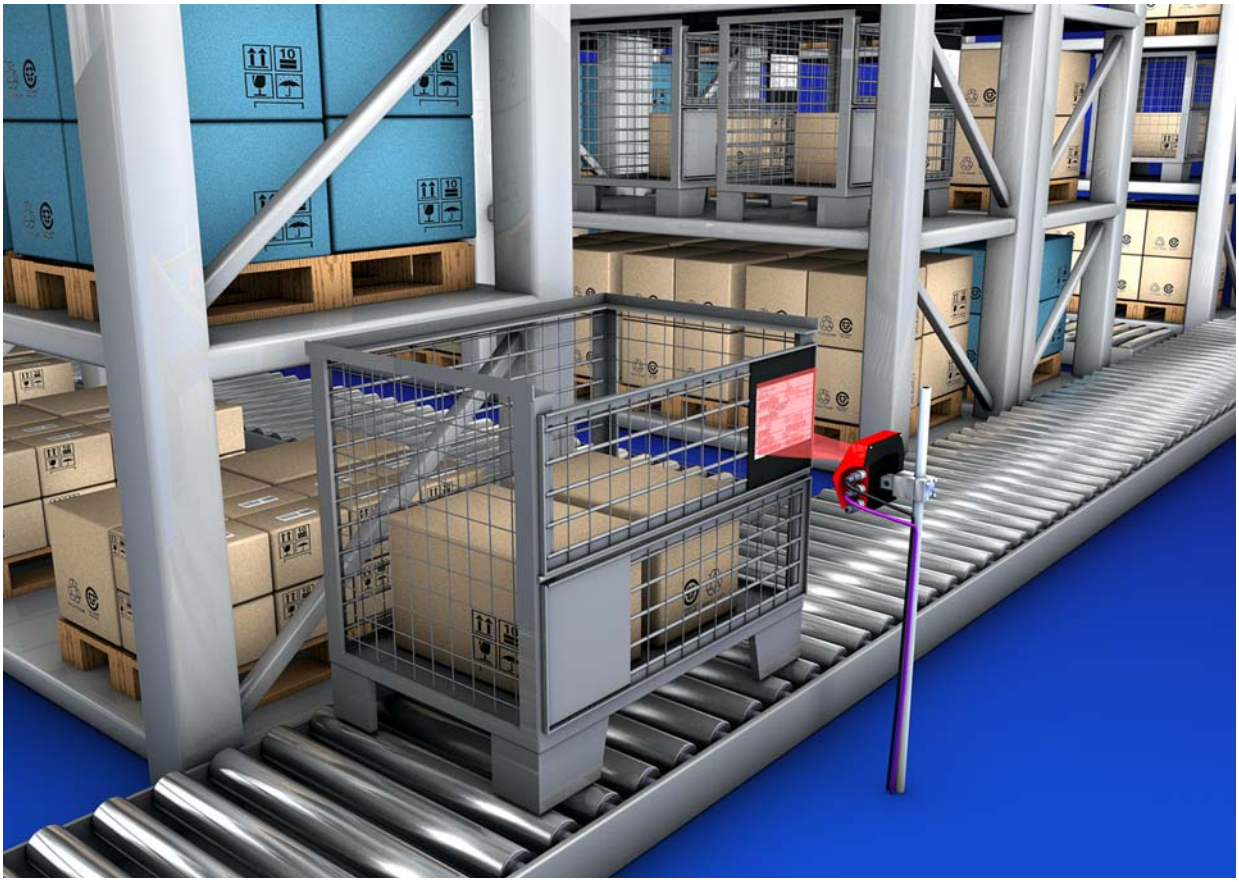

Figure 5.2: Deflection principle for the line scanner with oscillating mirror add-on

5.3 Omnidirectional reading

In order to read arbitrarily oriented bar codes on an object, at least 2 bar code readers are necessary. If the bar code is not printed over-square, i.e. bar length > code length, bar code readers with integrated code reconstruction technology are necessary.

Figure 5.3: Principle arrangement for omnidirectional reading

5.4 Leuze multiScan over Ethernet/PROFINET

The multiScan over Ethernet/PROFINET operating mode links individual bar code readings of multiple bar code scanners into a single decoding result. This is used, for example, on a packet conveyor system on which the label can be affixed on either the right or left side, thereby requiring two read stations. To prevent the host from having to always process two readings for a single packet, i.e. a decoding result and a No Read, a multiScan arrangement is used which transmits only one reading from the two read stations to the host; this single reading is transmitted by the multiScan master.

Thus, from the perspective of the host, the scanner network appears to be just a single bar code reader!

For this purpose one multiScan master and one or more multiScan slaves are connected together via Ethernet/PROFINET.

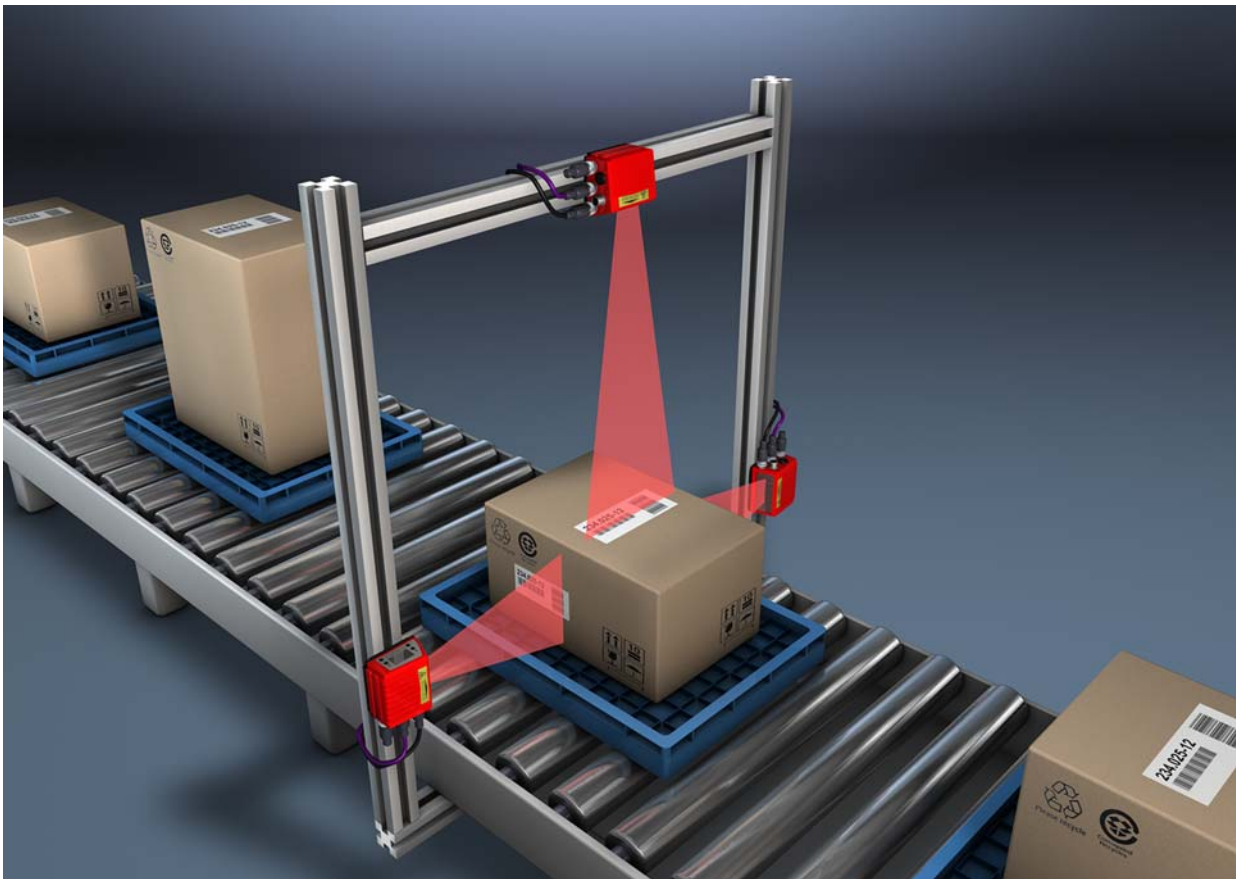

Figure 5.4: Scanner arrangement with the multiScan function

The multiScan function for Ethernet/PROFINET is possible for a minimum of 2 and maximum of 32 devices!

6 Mounting

The bar code readers can be mounted in different ways:

- Using two M4x6 screws on the rear of the device or using four M4x6 screws on the bottom of the device (see figure 3.2).
- Using a BT 56 mounting device on the two fastening grooves (see figure 15.3).
- Using a BT 59 mounting device on the two fastening grooves (see figure 15.4).

6.1 Device arrangement

6.1.1 Selecting a mounting location

In order to select the right mounting location, several factors must be considered:

- Size, orientation, and position tolerance of the bar codes on the objects to be scanned.
- The reading field of the device in relation to the bar code module width.
- The resulting minimum and maximum reading distance from the respective reading field (see chapter 15.4 "Reading field curves / optical data").
- The permissible cable lengths between the device and the host system depending on which interface is used.
- The correct time for data output. The device should be positioned in such a way that, taking into consideration the time required for data processing and the conveyor belt speed, there is sufficient time to e.g. initiate sorting operations on the basis of the read data.
- The display and control panel should be very visible and accessible.
- For configuring and commissioning with the webConfig tool, the USB interface should be easily accessible.
- Maintaining the required environmental conditions (temperature, humidity).
- Possible soiling of the reading window due to liquids, abrasion by boxes, or packaging material residues.
- Lowest possible chance of damage to the device by mechanical collision or jammed parts.
- Possible extraneous light (no direct sunlight or sunlight reflected by the bar code).

With the line scanner, the beam exits the device parallel to the housing base; with the oscillating mirror, the beam exits perpendicular to the housing base. The housing base is the black surface.

The best read results are obtained when:

- The device is mounted in such a way that the scanning beam is incident on the bar code at an angle of inclination greater than ±10° … 15° to vertical.
- The reading distance lies in the middle area of the reading field.
- The bar code labels are of good print quality and have good contrast ratios.
- You do not use high-gloss labels.
- There is no direct sunlight.

6.1.2 Avoiding total reflection – Line scanner

The bar code label must be positioned at an angle of inclination greater than ±10° … 15° from vertical in order to avoid total reflection of the laser beam (see figure 6.1)!

Total reflection occurs whenever the laser light of the bar code reader is directly incident on the surface of the bar code at an angle of 90°. The light directly reflected by the bar code may overload the bar code reader and thereby cause non-readings!

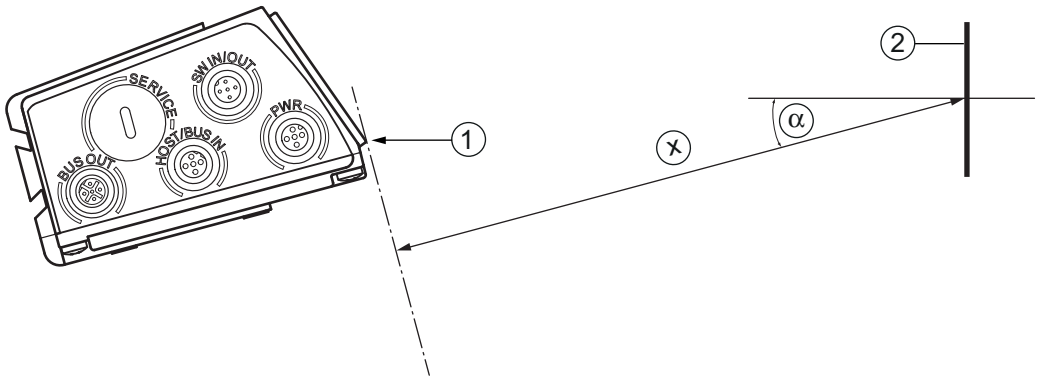

1 Zero position
2 Bar code
x Distance acc. to reading field curves
a ±10 … 15°

Figure 6.1: Total reflection – line scanner

6.1.3 Avoiding total reflection – oscillating-mirror scanner

For the device with oscillating mirror, the laser beam exits at an angle of 90° to vertical.

In addition, the swivel range of ±20° is to be taken into account.

This means that in order to be on the safe side and to avoid total reflection, the device with oscillating mirror must be inclined upward or downward 20° … 30°!

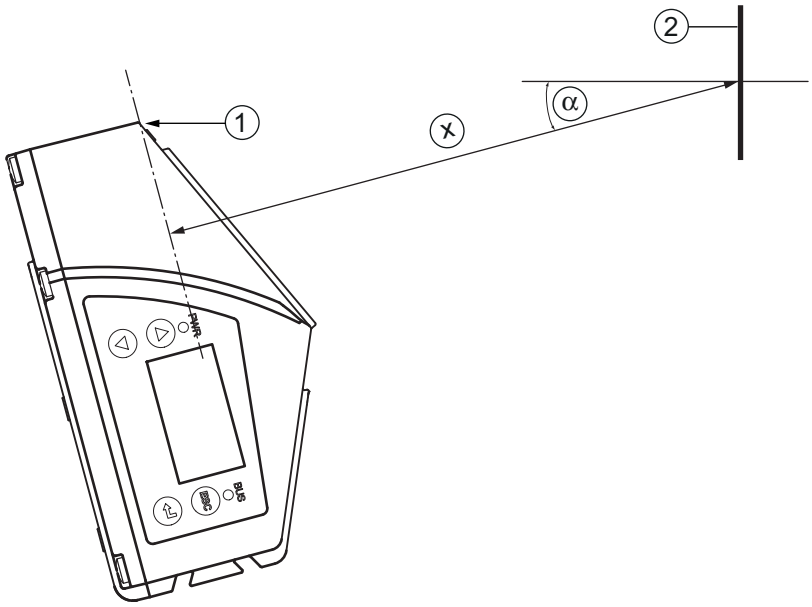

1 Zero position
2 Bar code
x Distance acc. to reading field curves
a ±25°

Figure 6.2: Total reflection – oscillating-mirror scanner

6.1.4 Possible read angles between device and bar code

The optimum alignment of the device is accomplished when the scan line scans the code bars almost at a right angle (90°). All read angles that are possible between the scan line and bar code must be taken account (see figure 6.3).

a Azimuth angle (tilt)
b Inclination angle (pitch)
g Rotation angle (skew)
In order to avoid total reflection, the skew g should be greater than 10 °

Figure 6.3: Reading angle for the line scanner

6.2 Installing the external parameter memory

↳ Remove the cover of the USB connection on the device.

↳ Insert the USB memory stick into the USB connection and then cover it with the connector hood to ensure degree of protection IP 65.

The USB memory stick can be inserted regardless of whether or not the device is connected to supply voltage.

- After the USB memory stick has been inserted and supply voltage applied, the following message appears on the display.
  Memory stick connected: Export internal configuration?

↳ Use the navigation buttons ▲▼ to select OK and activate with the enter button ↵.

The configuration is now transferred to the external parameter memory and is from now on updated immediately when the configuration is changed via display or online commands.

- The display of MS under the device address indicates that the USB memory stick is correctly connected and functional.

Replacing a defective device

↳ Uninstall the defective device.

↳ Remove the external parameter memory from the defective device by unscrewing the protection hood.

↳ Mount the external parameter memory on the new device.

↳ Install and start up the new device.

The following message appears on the display again:

- Memory stick connected: Export internal configuration?

↳ Use the navigation buttons ▲▼ to select Cancel and activate with the enter button ↵.

Make sure you select Cancel. Otherwise, the configuration in the external parameter memory is lost!

The configuration is now imported from the external parameter memory and the device is immediately operational without any further configuration.

7 Electrical connection

CAUTION

- Do not open the device yourself under any circumstances! There is otherwise a risk of uncontrolled emission of laser radiation from the device. The housing of the device contains no parts that need to be adjusted or maintained by the user.
- Before connecting the device, be sure that the supply voltage agrees with the value printed on the name plate.
- Connection of the device and cleaning must only be carried out by a qualified electrician.
- Ensure that the functional earth (FE) is connected correctly. Unimpaired operation is only guaranteed when the functional earth is connected properly.
- If faults cannot be corrected, the device should be removed from operation and protected against possible commissioning.

CAUTION

For UL applications, use is only permitted in Class 2 circuits in accordance with the NEC (National Electric Code). The bar code readers are designed in accordance with safety class III for supply by PELV (protective extra-low voltage with reliable disconnection).

CAUTION

Degree of protection IP 65 is achieved only if the connectors and caps are screwed into place!

7.1 Overview

The device is equipped with four M12 plugs/sockets which are A- and D-coded.

The voltage supply (PWR) as well as the four freely configurable switching inputs/outputs (SW IN/OUT and PWR) are connected there.

HOST / BUS IN is available as a PROFINET-IO interface for connecting to the host system.

By means of the implemented switch function in the device, an additional second BUS OUT PROFINET-IO interface is available for creating a scanner network (linear topology).

An USB connection is used as a SERVICE interface.

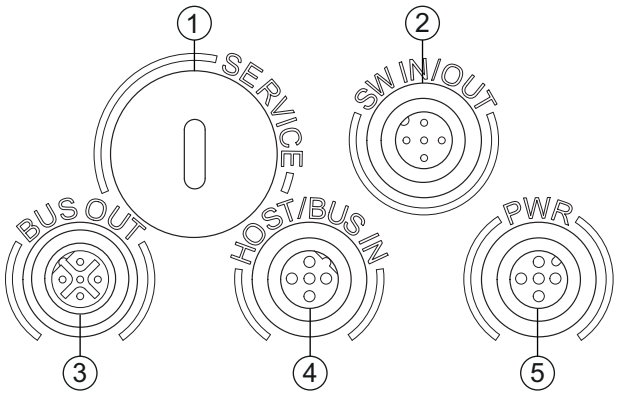

1 Service, USB socket, type A
2 SW In/Out, M12 socket(A-coded)
3 Bus Out, M12 socket (D-coded)
4 Host/Bus In, M12 socket (D-coded)
5 PWR, M12 plug (A-coded)

Figure 7.1: Connections of the device

Voltage supply and switching inputs/outputs

The voltage supply (10 … 30 VDC) is connected at the PWR M12 plug.

Available on the PWR M12 plug and on the SW IN/OUT M12 socket are four freely programmable switching inputs/outputs that can be individually adapted to the respective application (see chapter 7.2, see chapter 7.4).

Standalone operation in PROFINET-IO

During stand-alone operation of the device, the host interface of the superior system is connected to HOST/BUS IN. Thus, a star structure (Ethernet structure) is possible.

Network operation in PROFINET-IO

In network operation, the superior system (PC/PLC) is connected to the host interface of the device. With the aid of the switch integrated in the device, the bus connection to the next participant, e.g. another device, can occur directly via the BUS OUT socket! In addition to the classic star topology, a linear topology is thus also possible.

7.2 PWR – Voltage supply and switching inputs/outputs 3 and 4

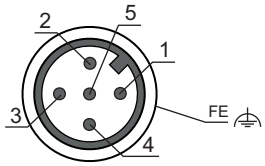

Figure 7.2: PWR, M12 plug (A-coded)

Table 7.1: Pin assignments - PWR

Pin	Name	Comment
1	VIN	Positive supply voltage +10 ... +30 V DC
2	SWIO_3	Configurable switching input / output 3
3	GND	Negative supply voltage 0 V DC
4	SWIO_4	Configurable switching input / output 4
5	FE	Functional earth
Thread	FE	Functional earth (housing)

Supply voltage

Connecting functional earth FE

↳ Ensure that the functional earth (FE) is connected correctly. Unimpaired operation is only guaranteed when the functional earth is connected properly. All electrical disturbances (EMC couplings) are discharged via the functional earth connection.

Switching input/output

The device is equipped with four freely programmable, opto-decoupled switching inputs and outputs SWIO_1 … SWIO_4.

The switching inputs can be used to activate various internal functions of the device (decoding, autoConfig, …). The switching outputs can be used to signal the state of the device and to implement external functions independent of the superior control.

The two switching inputs/outputs SWIO_1 and SWIO_2 are located on the SW IN/OUT M12socket (see chapter 7.4). The other two (SWIO_3 and SWIO_4) of the four freely configurable switching inputs/outputs are located on the PWR M12 plug.

In general, configuration of the bar code reader takes place on the PROFINET-IO via the corresponding GSD file. Alternatively, you can temporarily set the respective function as input or output via the display or with the aid of the webConfig configuration tool for the purpose of testing the respective functionality. After reconnecting to the PROFINET-IO or after deactivating parameter enabling, the parameter settings set by the PROFINET-IO are again active!

The external wiring as switching input and switching output is described in the following. For the respective function assignment to the switching inputs/outputs see chapter 10.

Function as switching input

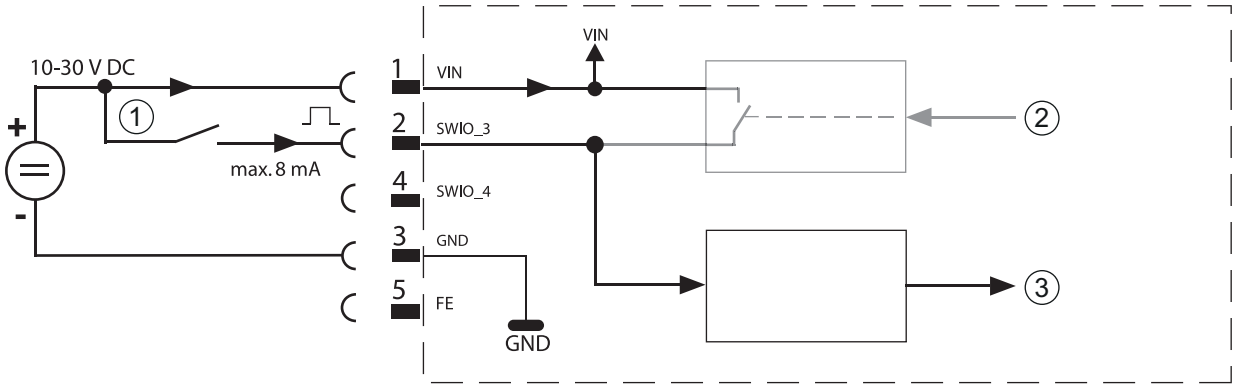

1 Switching input
2 Switching output from controller (deactivated)
3 Switching input to controller

Figure 7.3: Switching input connection diagram SWIO_3 and SWIO_4

If you use a sensor with a standard M12 connector, please note the following:

- Pins 2 and 4 must not be operated as switching outputs if sensors which function as inputs are also connected to these pins.

  If, for example, the inverted sensor output is connected to pin 2, and pin 2 of the bar code reader is, at the same time, configured as an output (and not as an input), the switching output malfunctions.

⚠ CAUTION
The maximum input current must not exceed 8 mA!

Function as switching output

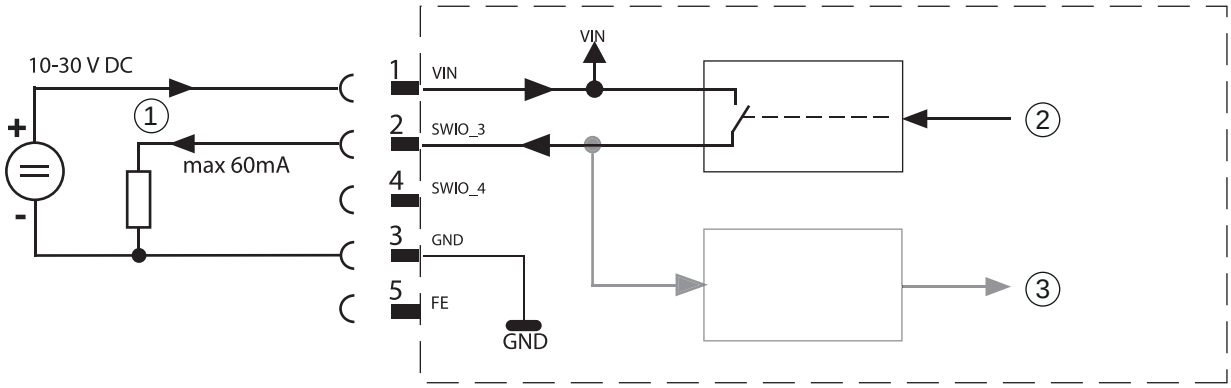

1 Switching output
2 Switching input from controller
3 Switching output to controller (deactivated)

Figure 7.4: Switching output connection diagram SWIO_3 / SWIO_4

NOTICE
Each configured switching output is short-circuit proof! Do not load the respective switching output of the device with more than 60 mA at +10 … +30 V DC in normal operation!

By default, the two switching inputs/outputs SWIO_3 and SWIO_4 are configured so that switching input SWIO_3 activates the reading gate and switching output SWIO_4 switches on “No Read”.

7.3 SERVICE – USB interface (type A)

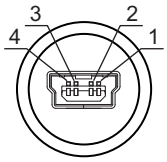

Figure 7.5: Service, USB, type A

Table 7.2: Pin assignments of SERVICE – USB interface

Pin	Name	Comment
1	VB	Positive supply voltage +5 V DC
2	D-	Data -
3	D+	Data -
4	GND	Ground

NOTICE

Maximum load of the +5 V DC supply voltage of the USB interface is 200 mA!

- Ensure adequate shielding.

  The entire interconnection cable must absolutely be shielded acc. to the USB specifications. Cable length must not exceed 3 m.
- Use the Leuze-specific USB service cable (see chapter 16 "Ordering information and accessories") for the connection and use a service PC to configure.

NOTICE

IP 65 is achieved only if the connectors and caps are screwed into place. Alternatively, a parameter memory in the form of a USB memory stick certified by Leuze electronic GmbH + Co. can be connected to the provided USB service interface. With this Leuze memory stick, degree of protection IP 65 is also ensured.

7.4 SW IN/OUT – Switching input/switching output

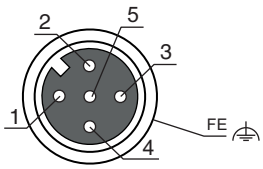

Figure 7.6: SW IN/OUT, M12 socket (A-coded)

Table 7.3: Pin assignment SW IN/OUT

Pin	Name	Comment
1	VOUT	Voltage supply for sensors (VOUT identical to VIN at PWR IN)
2	SWIO_1	Configurable switching input / output 1
3	GND	GND for the sensors
4	SWIO_2	Configurable switching input / output 2
5	FE	Functional earth
Thread	FE	Functional earth (housing)

The device is equipped with four freely programmable, opto-decoupled switching inputs and outputs SWIO_1 … SWIO_4.

The two switching inputs/outputs SWIO_1 and SWIO_2 are located on the SW IN/OUT M12socket. The other two (SWIO_3 and SWIO_4) of the four freely configurable switching inputs/outputs are located on the PWR M12 plug (see chapter 7.4).

The external wiring as switching input and switching output is described in the following. For the respective function assignment to the switching inputs/outputs see chapter 10.

Function as switching input

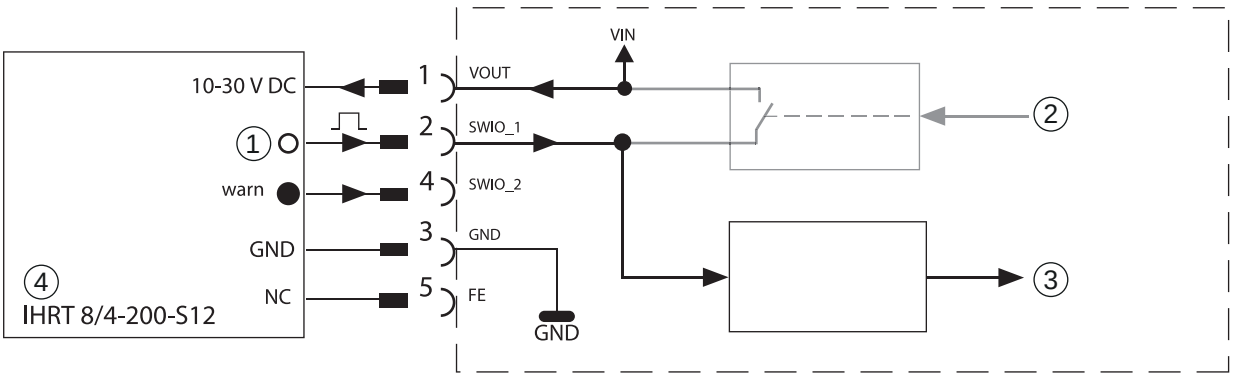

1 Output
2 Switching output from controller (deactivated)
3 Switching input to controller
4 Reflection light scanner

Figure 7.7: Switching input connection diagram SWIO_1 and SWIO_2

NOTICE
If you use a sensor with a standard M12 connector, please note the following: Pins 2 and 4 must not be operated as switching outputs if sensors which function as inputs are also connected to these pins. If, for example, the inverted sensor output is connected to pin 2, and pin 2 of the bar code reader is, at the same time, configured as an output (and not as an input), the switching output malfunctions.

NOTICE
The maximum input current must not exceed 8 mA!

Function as switching output

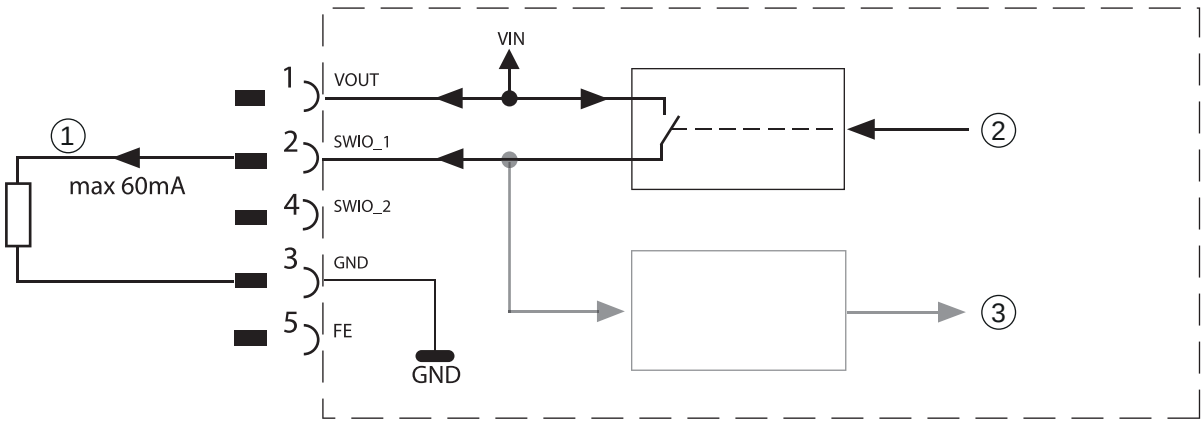

1 Switching output
2 Switching output from controller
3 Switching input to controller (deactivated)

Figure 7.8: Switching output connection diagram SWIO_1 / SWIO_2

NOTICE
Each configured switching output is short-circuit proof! Do not load the respective switching output of the device with more than 60 mA at +10 … +30 V DC in normal operation!

By default, the two switching inputs/outputs SWIO_1 and SWIO_2 are configured so that they function as switching inputs. Switching input SWIO_1 activates the start reading gate function and switching input SWIO_2 activates the reference code teach-in function.

The functions of the individual switching inputs/outputs are programmed via the display or via configuration in the webConfig tool under the Switching input or Switching output heading (see chapter 10 "Starting up the device - Configuration").

7.5 HOST / BUS IN

The device makes a PROFINET-IO interface available as host interface.

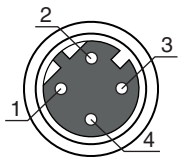

Figure 7.9: Host/Bus In, M12 socket (D-coded)

Table 7.4: Pin assignment HOST / BUS IN

Pin	Name	Comment
1	TD+	Transmit Data +
2	RD+	Receive Data +
3	TD-	Transmit Data -
4	RD-	Receive Data -
Thread	FE	Functional earth (housing)

For the host connection of the device, the “KB ET - … - SA-RJ45” ready-made cables are preferred (see table 16.3).

PROFINET-IO cable assignments

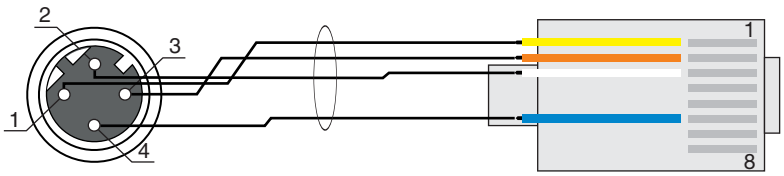

1 Twisted pair

Figure 7.10: HOST / BUS IN cable assignments on RJ-45

NOTICE
Ensure adequate shielding. The entire interconnection cable must be shielded and earthed. The RD+/RD- and TD+/TD- wires must be stranded in pairs. Use CAT 5 cable for the connection.

7.6 BUS OUT

To set up a PROFINET-IO network with other participants with linear topology, the device makes available another PROFINET-IO RT interface. The use of this interface drastically reduces the cabling requirements, as only the first BCL 648i requires a direct connection to the switch, via which it can communicate with the host. All other BCL 648i are connected in series to the first BCL 648i (see figure 7.13).

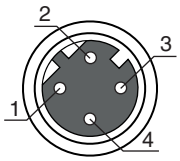

Figure 7.11: M12 socket (D-coded)

Table 7.5: Pin assignment BUS OUT

Pin	Name	Comment
1	TD+	Transmit Data +
2	RD+	Receive Data +
3	TD-	Transmit Data -
4	RD-	Receive Data -
Thread	FE	Functional earth (housing)

For the connection of two devices, the “KB ET - … - SSA” ready-made cables are preferred (see table 16.3).

If using self-made cables, observe the following notice:

NOTICE
Ensure adequate shielding. The entire interconnection cable must be shielded and earthed. The signal lines must be stranded in pairs. Use CAT 5 cable for the connection.

For the device as standalone device or as the last participant in a linear topology, termination on the BUS OUT socket is not mandatory!

7.7 PROFINET-IO topologies

The BCL 648i can be operated as a single device (standalone) with individual device name in a PROFINET-IO star topology. The PLC must communicate this device name to the participant during the device naming (see chapter 10.4.5 "Step 5 – Configuration of the device name - naming the device").

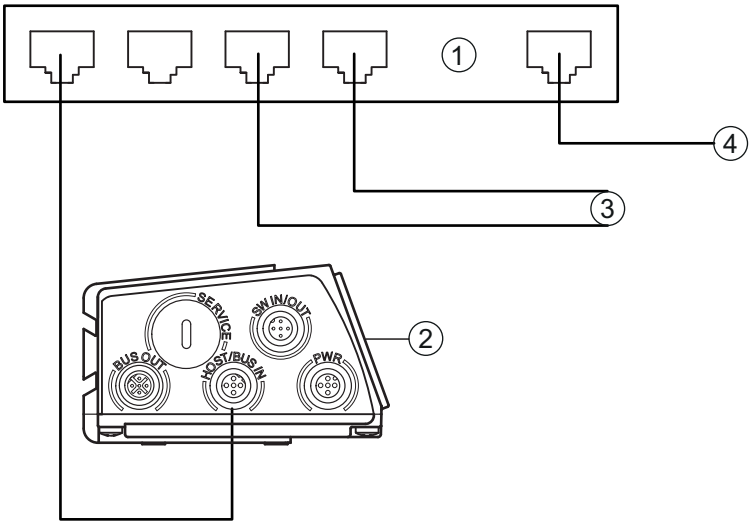

1 Ethernet switch
2 BCL 648i
3 Other network participants
4 PC / PLC host interface

Figure 7.12: PROFINET-IO in a star topology

The innovative further development of the device with integrated switch functionality offers the option of networking multiple bar code readers of type BCL 648i with one another. In addition to the classic star topology, a linear topology is thus also possible.

This makes wiring the network easy and inexpensive as participants are connected to one another in parallel.

The maximum length of a segment (connection from one participant to the next) is limited to 100 m.

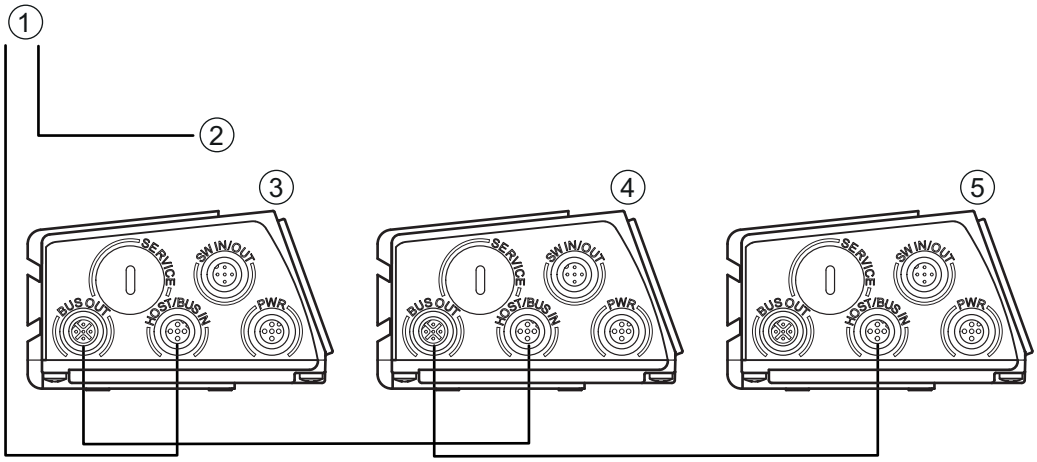

1 PC / PLC host interface
2 To other network participants
3 (device name 1)
4 (device name 2)
5 (device name 3)

Figure 7.13: PROFINET-IO in a linear topology

Up to 254 bar code readers can be networked. They must all be located in the same subnet.

To do this, the individual device name is assigned to each participating device through device naming, using the control's configuration tool (see chapter 10.4.5 "Step 5 – Configuration of the device name - naming the device").

Notices on the necessary configuration steps, see chapter 10.

7.7.1 PROFINET-IO wiring

Table 7.6: Contact assignment of M12 PROFINET-IO connection cable KB ET…

Pin	Name	Core color
Pin	Name	Core color
1	TD+	yellow
2	RD+	white
3	TD-	Orange
4	RD-	blue
SH (thread)	FE	bare

A Cat. 5 Ethernet cable should be used for wiring.

For the connection technology transition from M12 to RJ45, a “KDS ET M12 / RJ 45 W - 4P” adapter is available into which standard network cables can be plugged.

If no standard network cables are to be used (e.g. due to insufficient IP degree of protection), you can use the “KB ET - … - SA” user-configurable cables on the device (see table 16.3).

The connection between the individual devices in a linear topology is performed with the “KB ET - … - SSA” cable (see table 16.3).

For unavailable cable lengths, you can configure your cables yourself. When doing so, make certain that you connect TD+ on the M12 plug with RD+ on the RJ-45 plug and TD- on the M12 plug with RD- on the RJ-45 plug, respectively, etc.

NOTICE
Use the recommended plugs / sockets or the ready-made cables (see chapter 16 "Ordering information and accessories"). Use CAT 5 cable for the connection.

7.8 Cable lengths and shielding

↳ Observe the following maximum cable lengths and shielding types:

Table 7.7: Cable lengths and shielding

Connection	Interface	Max. cable length	Shielding
BCL – service	USB	3 m	Shielding absolutely necessary acc. to USB specifications
BCL – host	PROFINET-IO RT	100 m	shielding absolutely required
Network from the first BCL to the last BCL	PROFINET-IO RT	The maximum segment length must not exceed 100 m for 100Base-TX Twisted Pair (min. Cat. 5)	shielding absolutely required
BCL – power supply unit		30 m	Not necessary
Switching input		10 m	Not necessary
Switching output		10 m	Not necessary

8 Menu description

After voltage is applied to the bar code reader, a startup screen is displayed for several seconds. The display then shows the bar code reading window with all status information.

8.1 The main menus

Use the navigation buttons ▲▼ to move through the menu. Activate the desired selection with the enter button ↵.

Device information	This menu item contains detailed information on • Device type • Software version • Hardware version • Serial number
Network settings	• Display of the network settings Further information see chapter "Ethernet".
Bar code reading window	• Visualization of the read bar code information • Status overview of the switching inputs/outputs • Bar graphs for read quality of the current bar code Further information see chapter "Indicators in the display".
Parameter	• Configuration of the bar code reader Further information see chapter 8.2 "Parameter menu".
Language selection	• Selection of the display language Further information see chapter 8.3 "Language selection menu".
Service	• Scanner diagnosis and status messages Further information see chapter 8.4 "Service menu".
Actions	• Various functions for scanner configuration and manual operation Further information see chapter 8.5 "Actions menu".

A detailed description of the individual parameters can be found in the description of the Profibus GSD modules (see chapter 10.6 "Overview of the project modules").

Changes made via the display are overwritten!

Device settings for operating the device on the PROFINET-IO are managed and configured exclusively by the PROFINET-IO controller (PLC). If parameters are changed via the display during bus operation, the device is separated from the PROFINET-IO at the moment parameter enabling is activated via the display. Parameters set by the PROFINET-IO are moved to the background, and changes to parameters can be made via the display. When parameter enabling is exited, the device is automatically reconnected to the PROFINET-IO. Upon connection to the PROFINET-IO, the device receives all parameters from the PROFINET-IO controller (PLC).

8.2 Parameter menu

Parameter handling

The Parameter handling submenu is used to lock and release the parameter input via the display and for resetting to default values.

Table 8.1: Parameter handling submenu

Level 3	Level 4	Level 5	Selection/configuration option Description	Standard
Parameter enable			OFF/ON The standard setting (**OFF**) prevents unintended parameter changes. If parameter enabling is activated (**ON**), parameters can be changed manually. As long as parameter enabling is activated, the device is disconnected from the PROFINET-IO.	OFF
Default parameters			By pressing the enter button after selecting **Parameters to default**, all parameters are reset to their standard settings without any further security prompts. In this case, English is selected as the display language.	

Decoder table

In the Decoder table submenu, 4 different code type definitions can be stored. Bar codes that have been read can only be decoded if they correspond to one of the definitions stored here.

Table 8.2: Decoder table submenu

Level 3	Level 4	Level 5	Selection/configuration option Description	Standard
Max. no. of labels			Value between 0 and 64 The value set here specifies the maximum number of labels that should be detected for each reading gate.	1
Decoder 1	Symbology (Code type)		No code Code 2/5 Interleaved Code 39 Code 32 Code UPC Code EAN Code 128 EAN Addendum Codabar Code 93 GS1 DataBar Omnidirectional GS1 DataBar Limited GS1 DataBar Expanded If **No code** is configured, the current and all subsequent decoders are deactivated.	Code 2/5i
	Number of digits	Interval mode	OFF/ON With the **ON** setting, the values in digits 1 and 2 define a range of character numbers that are to be read.	OFF
		Digits 1	0 to 64 characters First decodable number of characters or lower range limit.	10
		Digits 2	0 to 64 characters Second decodable number of characters or upper range limit.	0
		Digits 3	0 to 64 characters Third decodable number of characters.	0
		Digits 4	0 to 64 characters Fourth decodable number of characters.	0
		Digits 5	0 to 64 characters Fifth decodable number of characters.	0
	Reading reliability		Value from 2 to 100 Number or scans required to reliably detect a label.	4
	Check digit method		Standard No check Depending on the symbology (code type) selected for the decoder, further calculation algorithms can be selected here. Check digit method used for the decoding of the bar code that has been read. If **Standard** is set, the check digit method intended for the respective code type is used.	Standard
	Check digit transmission		Standard Not standard Specifies whether the check digit is transmitted. **Standard** means that the transmission matches the standard intended for the respective code type.	Standard

Level 3	Level 4	Level 5	Selection/configuration option Description	Standard
Decoder 2	Symbology		As **decoder 1**	Code 39
	Number of digits	Interval mode	OFF/ON	ON
		Digits 1	0 to 64 characters	4
		Digits 2	0 to 64 characters	30
		Digits 3	0 to 64 characters	0
		Digits 4	0 to 64 characters	0
		Digits 5	0 to 64 characters	0
	Reading reliability		Value from 2 to 100	4
	Check digit method		As **decoder 1**	Standard
	Check digit transmis-sion		As **decoder 1**	Standard
Decoder 3	Symbology		As **decoder 1**	Code 128
	Number of digits	Interval mode	OFF/ON	ON
		Digits 1	0 to 64 characters	4
		Digits 2	0 to 64 characters	63
		Digits 3	0 to 64 characters	0
		Digits 4	0 to 64 characters	0
		Digits 5	0 to 64 characters	0
	Reading reliability		Value from 2 to 100	4
	Check digit method		As **decoder 1**	Standard
	Check digit transmis-sion		As **decoder 1**	Standard
Decoder 4	Symbology		As **decoder 1**	Code UPC
	Number of digits	Interval mode	OFF/ON	OFF
		Digits 1	0 to 64 characters	8
		Digits 2	0 to 64 characters	0
		Digits 3	0 to 64 characters	0
		Digits 4	0 to 64 characters	0
		Digits 5	0 to 64 characters	0
	Reading reliability		Value from 2 to 100	4
	Check digit method		As **decoder 1**	Standard
	Check digit transmis-sion		As **decoder 1**	Standard

Digital SWIO

The Digital SWIO submenu is used to configure the 4 switching inputs/outputs of the device.

Table 8.3: Digital SWIO submenu

Level 3	Level 4	Level 5	Selection/configuration option Description	Standard
Sw. input/output 1	I/O mode		Input / Output / Passive Determines the function of switching input/output 1. In the case of passive, the connection is on 0 V if the **Inverted parameter is set to OFF**, and on +UB if the **Inverted parameter is set to ON**.	Input
	Switching input	Invert	OFF / ON **OFF** = activation of the switching input function upon high level at the switching input **ON** = activation of the switching input function upon low level at the switching input	OFF
		Debounce time	Value from 0 to 1000 Time in milliseconds for which the input signal must be present and stable.	5
		Start-up delay	Value from 0 to 65535 Time in milliseconds between the end of the debounce time and activation of the function configured below.	0
		Pulse duration	Value from 0 to 65535 Minimum activation time in milliseconds for the function configured below.	0
		Delay off time	Value from 0 to 65535 Time in milliseconds for which the function configured below remains activated after the switching input signal is deactivated and the pulse duration has expired.	0
		Function	No BCL600i function Reading gate start/stop Reading gate stop -Reading gate start Teach reference code Autoconfig start/stop The function set here is carried out after the switching input is activated.	Reading gate start/stop

Level 3	Level 4	Level 5	Selection/configuration option Description	Standard
	Switching output	Invert	OFF / ON **OFF** = activated switching output upon high level **ON** = activated switching output upon low level	OFF
		Signal delay	Value from 0 to 65535 Time in milliseconds between activation function and switching of the switching output.	0
		Pulse duration	Value from 0 to 65535 Switch-on time of the switching output in milliseconds. If the **Pulse duration** is set to 0, the switching output is switched on via the **Activation function** and switched off via the **Deactivation function**. If the **Pulse duration** is greater than 0, the **Deactivation function** has no effect.	400
		Activation function 1	No function Reading gate start Reading gate end Positive reference code comparison 1 Negative reference code comparison 1 Valid read result Invalid read result Device ready Device not ready Data transmission active Data transmission not active AutoCont. good quality AutoCont. bad quality Reflector detected Reflector not detected External event, pos. edge External event, neg. edge Device active Device standby No device error Device error Positive reference code comparison 2 Negative reference code comparison 2 The function set here specifies which event activates the switching output.	No function
		Deactivation function 1	See Activation function 1 for selection options The function set here specifies the event that deactivates the switching output.	No function
Sw. input/output 2	I/O mode		Input / Output / Passive	Output
	Switching input	Invert	OFF / ON	OFF
		Debounce time	Value from 0 to 1000	5
		Start-up delay	Value from 0 to 65535	0
		Pulse duration	Value from 0 to 65535	0
		Delay off time	Value from 0 to 65535	0
		Function	see switching input/output 1	No function
	Switching output	Invert	OFF / ON	OFF
		Signal delay	Value from 0 to 65535	0
		Pulse duration	Value from 0 to 65535	400
		Activation function 2	see switching input/output 1	Valid read result
		Deactivation function 2	see switching input/output 1	Reading gate start

Level 3	Level 4	Level 5	Selection/configuration option Description	Standard
Sw. input/output 3	I/O mode		Input / Output / Passive	Input
	Switching input	Invert	OFF / ON	OFF
		Debounce time	Value from 0 to 1000	5
		Start-up delay	Value from 0 to 65535	0
		Pulse duration	Value from 0 to 65535	0
		Delay off time	Value from 0 to 65535	0
		Function	see switching input/output 1	Reading gate start/stop
	Switching output	Invert	OFF / ON	OFF
		Signal delay	Value from 0 to 65535	0
		Pulse duration	Value from 0 to 65535	400
		Activation function 3	see switching input/output 1	No function
		Deactivation function 3	see switching input/output 1	No function
Sw. input/output 4	I/O mode		Input / Output / Passive	Output
	Switching input	Invert	OFF / ON	OFF
		Debounce time	Value from 0 to 1000	5
		Start-up delay	Value from 0 to 65535	0
		Pulse duration	Value from 0 to 65535	0
		Delay off time	Value from 0 to 65535	0
		Function	see switching input/output 1	No function
	Switching output	Invert	OFF / ON	OFF
		Signal delay	Value from 0 to 65535	0
		Pulse duration	Value from 0 to 65535	400
		Activation function 4	see switching input/output 1	Invalid read result
		Deactivation function 4	see switching input/output 1	Reading gate start

Ethernet

The Ethernet submenu is used to configure the TCP/IP and UDP protocols of the device.

Note that the parameters described in the following are editable and may be overwritten by the dominant PLC data.

Table 8.4: Ethernet submenu

Level 3	Level 4	Level 5	Level 6	Selection/configuration option Description	Standard
Ethernet interface	IP address			The IP address can be set to any value in the xxx.xxx.xxx.xxx format. Normally, the network administrator specifies the IP address that is to be set here. If DHCP is activated, the setting made here has no effect and the device is set to the values that it obtains from the DHCP server.	192.168.060.101
	Gateway			The gateway address can be set to any value in the xxx.xxx.xxx.xxx format. The device communicates with participants in other subnets via the gateway. Splitting the read application over multiple subnets is rather uncommon; the setting of the gateway address, thus, usually has no meaning.	000.000.000.000
	Net mask			The net mask can be set to any value in the xxx.xxx.xxx.xxx format. Usually, the device is used in a private Class C network and the default setting can be accepted without change. Please note that it is possible here to enter arbitrary values for xxx.xxx.xxx.xxx. Only the values 255 or 000 are permissible for xxx, however. If other values are set, an error message appears upon restart of the device.	255.255.255.000
	DHCP activated			Off/On If DHCP is activated, the device draws its settings for IP address, gateway and net mask from a DHCP server. The manual settings made above have no effect, but are retained and are again active if DHCP is deactivated.	Off
Host communication	TcpIP	Activated		Off/On TCP/IP communication with the host is activated. TCP/IP and UDP can be operated in parallel to the PROFINET-IO!	Off
		Mode		Server/client **Server** defines the device as TCP server: The superior host system (PC / PLC as client) actively establishes the connection and the connected device waits for the connection to be set up. Under **TcpIP Server -> Port number**, you must also specify on which local port the device accepts communication requests from a client application (host system). **Client** defines the device as TCP client: The device actively establishes the connection to the superior host system (PC / PLC as server). Under **TcpIP Client**, you must also specify the IP address of the server (host system) and the port number on which the server (host system) accepts a connection. In this case, the device now determines when and with whom a connection is established!	Server
		TcpIP client	IP address	The IP address can be set to any value in the xxx.xxx.xxx.xxx format. IP address of the host system with which the device exchanges data as TCP client.	000.000.000.000
			Port number	The port number can be set to any value between 0 and 65535. Port number of the host system with which the device exchanges data as TCP client.	10000
			Timeout	The timeout can be set to any value between 100 and 60,000 ms. Time after which an attempt to establish a connection is automatically interrupted by the device if the server (host system) does not respond.	1000 ms
			Repetition time	The repetition time can be set to any value between 100 and 60,000 ms. Time after which another attempt is made to establish a connection.	5000 ms
		TcpIP server	Port number	The port number can be set to any value between 0 and 65535. Local port on which the device accepts connection requests from a client application (host system) as TCP server.	10000

Level 3	Level 4	Level 5	Level 6	Selection/configuration option Description	Standard
	UDP	Activated		Off/On Activates the connection-free UDP protocol which is suitable for e.g. transferring process data to the host. UDP and TCP/IP can be used in parallel. For network applications with changing partners or for only brief data transmissions, UDP is preferred as connection-free protocol.	Off
		IP address		IP address of the host to which the data is to be transferred. The IP address can be set to any value in the xxx.xxx.xxx.xxx format. Correspondingly, the host system (PC / PLC) requires the set IP address of the device and the selected port number. By assigning these parameters, a socket is formed via which the data can be sent and received.	000.000.000.000
		Port number		Port number of the host to which the data is to be transferred. The port number can be set to any value between 0 and 65535.	10001

8.3 Language selection menu

Currently, there are 5 display languages available:

- German
- English
- Spanish
- French
- Italian
- Chinese

The display language and the language of the webConfig user interface are synchronized. The setting in the display affects the webConfig tool and vice versa.

When operating the device on the PROFINET-IO, the language configured in the GSD file is used in the display.

8.4 Service menu

Diagnostics

This menu item is used exclusively for service purposes by Leuze electronic.

Status messages

This menu item is used exclusively for service purposes by Leuze electronic.

8.5 Actions menu

Start decoding

Here, you can perform a single reading via the display.

↳ Activate the single reading with the enter button ↵ and hold a bar code in the reading field of the device.

The laser beam is switched on and the following display appears:

zzzzzzzzz

Once the bar code is detected, the laser beam is switched off again. The read result zzzzzzzzz is shown directly in the display for about 1 s. After that, the Actions menu is displayed again.

Start alignment

The alignment function makes it easy to align the device by optically displaying the read quality.

↳ Activate the alignment function with the enter button ↵ and hold a bar code in the reading field of the device.

At first, the laser beam is switched on continuously, enabling you to position the bar code securely in the reading field. Once the bar code is read, the laser beam is switched off briefly and the following display appears:

xx zzzzzz

xx	Read quality in % (scans with info)
zzzzzz	Contents of the decoded bar code

Once the bar code has been detected, the laser beam starts to flash.
The flash frequency provides visual information on the read quality. The faster the laser beam flashes, the higher the read quality.

In this mode, the bar code reader must reach at least 100 identical readings to obtain the result. The more readings are required, the lower the read quality.

The read quality is displayed via the bar graph.

Start auto-setup

The auto-setup function provides an easy option for configuring the code type and number of digits of Decoder 1.

↳ Use the enter button ↵ to activate the auto-setup function and hold an unknown bar code in the reading beam of the device.

The following display appears:

xx yy zzzzzz

The following information is displayed:

xx		Code type of the detected code (sets the code type of Decoder 1)
	01	2/5 Interleaved
	02	Code 39
	03	Code 32
	06	UPC (A, E)
	07	EAN
	08	Code 128, EAN 128
	10	EAN Addendum
	11	Codabar
	12	Code 93
	13	GS 1 Databar Omnidirectional
	14	GS 1 Databar Limited
	15	GS 1 Databar Expanded
yy		Number of digits of the detected code (sets the number of digits of Decoder 1)
zzzzzz		Contents of the decoded label. A appears if the label was not correctly read.

Start teach-in

The teach-in function can be used to conveniently read reference code 1.

↳ Use the enter button ↵ to activate the teach-in function and hold a bar code which contains the content that you wish to store as the reference code in the reading beam of the device.

The following display appears:

RC13xxzzzzzz

RC13	Means that **R**eference**C**ode number 1 is stored in RAM. This is always output
xx	Defined code type (see auto-setup)
z	Defined code information (1 … 63 characters)

8.6 Operation

Shown here is an example describing important operating procedures in detail.

Parameter enable

During normal operation parameters can only be viewed. If parameters need to be changed, the ON menu item in the Parameter enabling menu must be activated.

Use the navigation buttons ▲▼ to move through the menu. Activate the desired selection with the enter button ↵.

- In the Parameter menu, select **Parameter handling**.
- Press the enter button to enter the menu.
- Select the **Parameter enable** menu item.
- Press the enter button to enter the menu.
- Select the **ON** menu item.
- Press the enter button to enter the menu.
- The PWR LED lights up red. You can now set individual parameters via the display.
- Press the Escape button twice to return to the main menu.

If a password was stored, parameter enabling is not possible until this password is entered (see chapter 8.6 "Operation", Password for parameter enabling).

The device is deactivated on the PROFINET-IO if parameter enabling is activated via the display. The device is reactivated on the PROFINET-IO after parameter enabling is exited.

In the PROFINET-IO network, configuration is performed exclusively via the PROFINET-IO controller.

Parameters set via the display when operating the device on the PROFINET-IO are overwritten by the parameters set in the GSD modules. For GSD modules which are not actively used on the PROFINET-IO, the default settings of the bar code reader apply (see chapter 10.6 "Overview of the project modules"). Thus, the PROFINET-IO presets values to all parameters.

If parameters are changed via the display during bus operation, the device is separated from the PROFINET-IO at the moment parameter enabling is activated via the display. Parameters set by the PROFINET-IO are moved to the background, and changes to parameters can be made via the display. When parameter enabling is exited, the device is automatically reconnected to the PROFINET-IO. Upon connection to the PROFINET-IO, the device receives all parameters from the PROFINET-IO controller.

Changes made via the display are overwritten!

Device settings for operating the device on the PROFINET-IO are managed and configured exclusively by the PROFINET-IO controller.

Password for parameter enabling

The password query is deactivated by default. To protect against unwanted changes, the password query can be activated. The preset password is 0000 and can be changed as necessary . To switch on password protection, proceed as follows:

Setting the password

In order to enter the password, parameter enabling must be activated.

A selected password is saved with save.

If the password is not known, the master password 2301 can always be used to enable the device.

When operating the device on the PROFINET, the password entered in the display has no effect. The PROFINET overwrites the password with the default settings.

If a password is desired for PROFINET operation, it must be configured via module 62 (see chapter 10.12.3 "Module 62 – Display").

Network configuration

For information on configuring PROFINET IO see chapter 10 "Starting up the device - Configuration".

9 Commissioning – Leuze electronic webConfig tool

With the **Leuze webConfig tool**, an operating-system independent, web-technology based, graphical user interface is available for configuring bar code readers of the BCL 600i series.

Through the use of HTTP as communication protocol and by using only standard technologies on the client side (HTML, JavaScript and AJAX), which are supported by all commonly used, modern browsers (e.g. Mozilla Firefox beginning with Version 2 or Internet Explorer beginning with Version 7.0), it is possible to operate the Leuze webConfig tool on any internet-ready PC.

9.1 Connecting the service USB interface

The connection to the SERVICE USB interface of the device is established via the PC-side USB interface using a special USB cable with 2 type A/A plugs.

9.2 Installation

9.2.1 System requirements

Operating system:

Windows 2000
Windows XP (Home Edition, Professional)
Windows Vista
Windows 7
Windows 8

Computer:

PC with USB interface version 1.1 or higher

Graphics card:

min. 1024 x 768 pixels or higher resolution

Required disk capacity:

approx. 10 MB

It is recommended to update the operating system regularly and to install the current Windows service packs.

9.2.2 Installing the USB driver

In order for the device to be automatically detected by the connected PC, the USB driver must be installed once on your PC. To do this, you must have administrator privileges.

Please proceed according to the following steps.

- Start your PC with administrator privileges and log on.
- Load the CD included in the delivery contents of your device in the CD drive and start the setup.exe program.
- Alternatively, you can also download the setup program from the internet at www.leuze.com.
- Follow the instructions provided by the setup program.

Upon successful installation of the USB driver, an icon automatically appears on the desktop.

To check: In the Windows device manager, a device called “Leuze electronic, USB Remote NDIS Network Device” appears under the “Network adapter” device class following successful USB registration.

If the installation failed, contact your network administrator: The settings of the firewall used may need to be adjusted.

9.3 Starting the webConfig tool

To start the webConfig tool, click the icon located on the desktop. Make certain that the device is connected to the PC via the USB interface and that voltage is connected.

Or alternatively: Open a browser on your PC and enter the following address: 192.168.61.100.
This is the default Leuze service address for communication with bar code readers of the BCL 600i series.
In both cases, the following start page appears on your PC.

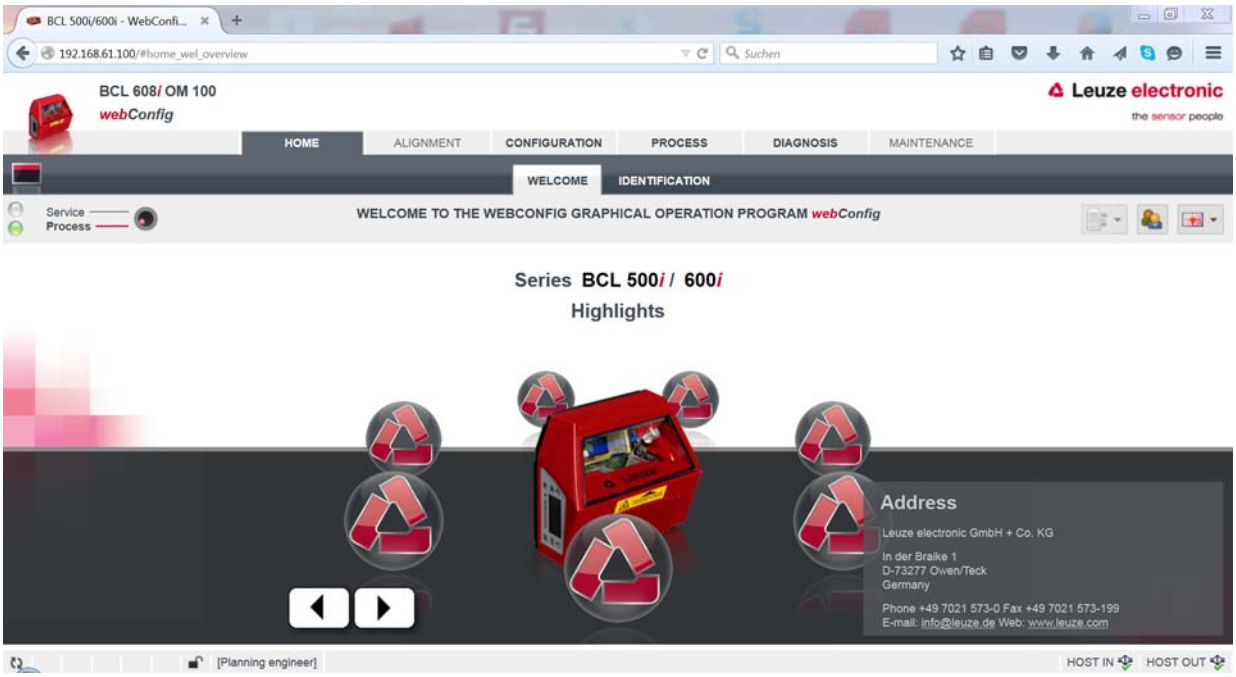

Figure 9.1: The start page of the webConfig tool

The webConfig tool is completely contained in the firmware of the device. Depending on firmware version, the start page may vary from that shown above.

The individual parameters are – where useful – graphically displayed in order to better illustrate the meaning of the what are often perceived as abstract parameters.
The result is an easy-to-use and practically-oriented user interface!

9.4 Short description of the webConfig tool

The webConfig tool has five main menus:

- Home
  With information on the connected device as well as on installation. This information corresponds to the information in this handbook.
- Alignment
  For manually starting read processes and for aligning the bar code reader. The results of the read processes are displayed immediately. As a result, this menu item can be used to determine the optimum installation location.
- Configuration
  For adjusting decoding, for data formatting and output, switching inputs/outputs, communication parameters and interfaces, etc. …
- Diagnosis
  For event logging of warnings and errors.
- Maintenance
  For updating the firmware.

The user interface of the webConfig tool is largely self-explanatory.

9.5 Module overview in the Configuration menu

The adjustable parameters of the device are clustered in modules in the Configuration menu.

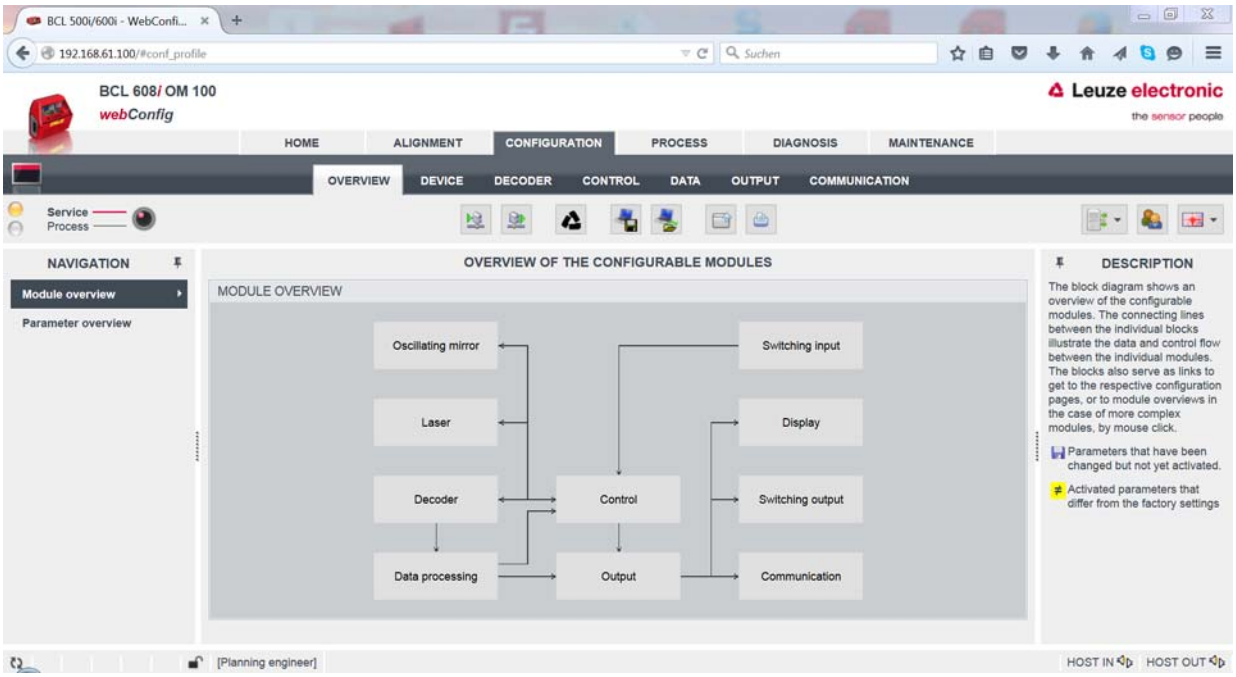

Figure 9.2: Module overview in the webConfig tool

The webConfig tool is completely contained in the firmware of the device. Depending on firmware version, the module overview may vary from that shown above.

The individual modules and their relationships to one another are graphically displayed in the module overview. The display is context sensitive, i.e. click a module to directly access the corresponding submenu.

An overview of the modules:

- Decoder
  Definition of code types, code-type features and number of digits of the labels that are to be decoded
- Data processing
  Filtering and processing of the decoded data
- Output
  Sorting of the processed data and comparison with reference codes
- Communication
  Formatting of the data for output via the communication interfaces
- Control
  Activation/deactivation of decoding
- Switching input
  Activation/deactivation of read processes
- Switching output
  Definition of events which activate/deactivate the switching output
- Display
  Formatting of the data for output on the display
- Oscillating mirror (optional)
  Setting oscillating mirror parameters

The webConfig tool is available for all bar code readers of the BCL 600i series. Because configuration of the PROFINET-IO device is performed via the PROFINET-IO controller, the module overview shown in the webConfig tool is, in this case, used only for displaying and checking the configured parameters.

The current configuration of your device is loaded upon startup of the webConfig tool. If you change the configuration via the control while the webConfig tool is running, you can use the “Load parameter from

device” button after making the changes to update the display in the webConfig tool. This button appears in the upper left in the center window area in all submenus of the Configuration main menu.

10 Starting up the device - Configuration

This chapter describes basic configuration steps which you can carry out either via the webConfig tool or the display.

Via the webConfig tool

The most convenient way to configure the device is via the webConfig tool. Only the webConfig tool gives you access to all settings of the device. To use the webConfig tool, you need to establish a USB connection between the device and a PC/laptop.

Notes on use see chapter 9 "Commissioning – Leuze electronic webConfig tool".

Via display

The display offers basic configuration options for the device. Configuration via the display is appropriate if you want to configure simple reading tasks and you cannot or do not want to set up a USB connection between the device and a PC/laptop.

Notes on use see chapter 3.5.2 "Status display and operation".

10.1 General information on PROFINET-IO implementation

Various product variants of the BCL 600i series are available for connecting to different fieldbus systems such as PROFIBUS DP, PROFINET-IO and Ethernet.

The BCL 648i is designed as a PROFINET-IO device (acc. to IEEE 802.3). It supports a transmission rate of up to 100 Mbit/s (100Base TX/FX), full duplex, as well as auto-negotiation and auto-crossover.

The functionality of the device is defined via parameter sets which are clustered in modules. These modules are contained in a GSDML file.

Each device is sealed with a unique MAC ID. This information is used to assign a unique, plant-specific device name (NameOfStation) to the device via the Discovery and Configuration Protocol (DCP). When configuring a PROFINET-IO system, the assignment of the device names to the configured IO devices creates a name-based relationship for the participating IO devices (device naming).

The device features multiple M12 plugs / sockets for the electrical connection of the supply voltage, the interface and the switching inputs and outputs (see chapter 7 "Electrical connection").

The device supports:

- PROFIBUS-IO device functionality based on the PROFIBUS profile for identification systems
- Modular structure of the IO data
- PROFINET-IO RT (Real Time) communication
- Standard Fast Ethernet (100 Mbit/s) connections (M12 technology)
- Integrated Ethernet switch/ 2 Ethernet ports
- PROFINET-IO Conformance Class B (CC-B)
- Media Redundancy Protocol (MRP)
- I&M support: I&M 0-4
- Diagnostics / alarms

Identification & Maintenance Functions

The device supports the base record I&M0:

Table 10.1: Base record I&M0

Contents	Index	Data type	Description	Value
Header	0	10 bytes	Manufacturer specific Manufacturer specific	
MANUFACTURER_ID	10	UNSIGNED16	Leuze PNO manufacturer ID Leuze manufacturer ID	338
ORDER_ID	12	ASCII string 20 bytes	Leuze order no.	
SERIAL_NUMBER	32	ASCII string 16 bytes	Unique device serial number	Device-dependent
HARDWARE_REVISION	48	UNSIGNED16	Hardware revision number, e.g. "0…65535"	Device-dependent
SOFTWARE_REVISION	50	1xCHAR, 3xUNSIGNED8	Software version number, e.g., V130 corresponds to "V1.3.0"	Device-dependent
REVISION_COUNTER	54	UNSIGNED16	Is incremented when updating individual modules. This function is not supported.	0
PROFILE_ID	56	UNSIGNED16	PROFIBUS application profile number	0xF600 (generic device)
PROFILE_SPECIFIC_TYPE	58	UNSIGNED16	Info about subchannels and sub-modules. Not relevant	0x01,0x01
IM_VERSION	60	2xUNSIGNED8	Implemented I&M version V 1.1	0x01,0x01
IM_SUPPORTED	62	Bit[16]	Optional I&M records available	0

The device supports further protocols and services for communication:

- TCP / IP (Client / Server)
- UDP
- DCP
- ARP
- PING

10.1.1 PROFINET-IO communication profile

The communication profile defines how participants serially transmit their data via the transmission medium.

The PROFINET-IO communication profile is designed for efficient data exchange on the field level. The data exchange with the devices is mainly cyclical. For the configuration, operation, monitoring and alarm handling, however, acyclic communication services are also used.

Depending on the communication requirements, PROFINET-IO offers suitable protocols and transfer methods:

Real Time communication (RT) via prioritized Ethernet frames for

- Cyclical process data (I/O data stored in the I/O area of the control)
- Clock synchronization
- Alarms
- Neighborhood information
- Address assignment/address resolution via DCP.

TCP/UDP/IP communication via standard Ethernet TCP/UDP/IP frames for

- Establishing communication and
- Acyclic data exchange, and also for the transfer of various information types such as:
  - Parameters for the configuration of the modules during the establishment of the communication
  - I&M 0-4 data (Identification & Maintenance functions)
  - Reading diagnostic information
  - Reading I/O data
  - Writing device data

10.1.2 Conformance Classes

PROFINET-IO devices are categorized into conformance classes to simplify the evaluation and selection of the devices for the users. The device can use an existing Ethernet network infrastructure and corresponds to Conformance Class B (CC-B). Thus, it supports the following features:

- Cyclical RT communication
- Acyclic TCP/IP communication
- Alarms/diagnostics
- Automatic address assignment
- I&M 0-4 functionality
- Neighborhood detection basic functionality
- FAST Ethernet 100 Base-TX/FX
- Convenient device exchange without engineering tools
- SNMP support

10.2 Measures to be performed prior to the initial commissioning

↳ Before commissioning, familiarize yourself with the operation and configuration of the device.

↳ Before connecting the supply voltage, recheck all connections and ensure that they have been properly made.

↳ Check the applied voltage. It must be in the range between +10V … 30 V DC.

Connecting functional earth FE

↳ Ensure that the functional earth (FE) is connected correctly.

NOTICE
Unimpaired operation is only guaranteed when the functional earth is connected properly. All electrical disturbances (EMC couplings) are discharged via the functional earth connection.

10.3 Starting the device

↳ Connect the +10 … 30VDC supply voltage (typ. +24VDC); the device starts up and the bar code reading window appears on the display.

By default, parameter enabling is deactivated and you cannot change any settings. If you wish to carry out the configuration via the display, you must activate parameter enabling (see chapter 8.6 "Operation", Parameter enable).

↳ First, you need to assign its individual name to the device.

The PLC must communicate this device name to the participant during the device naming (see chapter 10.4.5 "Step 5 – Configuration of the device name - naming the device").

10.4 Configuration steps for a Siemens Simatic S7 control

The following steps are necessary for commissioning with a Siemens S7 control:

1. Preparation of the control system (S7 PLC)
2. Installation of the GSD file
3. Hardware configuration of the S7 PLC
4. Transfer of the PROFINET-IO configuration to the IO controller (S7 PLC)
5. Device naming
   - Configuration of the device name
   - Device naming
   - Assigning the device names to the configured IO devices (see figure 10.2).
   - Assignment of MAC address - IP address - individual device name (see figure 10.3)
6. Check device name

10.4.1 Step 1 – Preparing the control system (S7 PLC)

The first step involves the assignment of an IP address to the IO controller (PLC - S7) and the preparation of the control for consistent data transmission.

If an S7 control is used, you need to ensure that Simatic-Manager Version 5.4 + service pack 5 (V5.4+SP5) or higher is used.

10.4.2 Step 2 – Installation of the GSD file

For the subsequent configuration of the IO devices, e.g., BCL 648i, the corresponding GSD file must be loaded first. All data in modules required for operating the device is described in this file. These are input and output data and device parameters for the functioning of the device and the definition of the control and status bits.

↳ Install the GSD file associated with the device in the PROFINET-IO Manager of your control.

General information on the GSD file

The term GSD stands for the textual description of a PROFINET-IO device model.

For the description of the more complex PROFINET-IO device model, the XML-based GSDML (Generic Station Description Markup Language) was introduced.

In the following, the terms “GSD” or “GSD file” always refer to the GSDML-based format.

The GSDML file can support an arbitrary number of languages in one file. Every GSDML file contains a version of the device model. This is also reflected in the file name.

File name structure

The file name of the GSD file is constructed according to the following rule:

- GSDML-[GSDML schema version]-Leuze-BCL648i-[date].xml

Explanation:

- GSDML schema version:
  Version identifier of the GSDML schema version used, e.g., V2.2.
- Date:
  Release date of the GSD file in the format yyyymmdd.
  This date doubles as the version identifier of the file.

Example:

- GSDML-V2.2-Leuze-BCL648i-20090503.xml

You can find the GSD file for the respective device model at **www.leuze.com**.

All data in modules required for operating the device is described in this file. These are input and output data and device parameters for the functioning of the device and the definition of the control and status bits.

If parameters are changed, e.g., in the project tool, these changes are stored on the PLC side in the project, not in the GSD file. The GSD file is a certified and integral part of the device and must not be changed manually. The file is not changed by the system either.

The functionality of the device is defined via parameter sets. The parameters and their functions are structured in the GSD file using modules. A user-specific configuration tool is used during PLC program creation to integrate the required modules and configure them appropriately for their respective use. During operation of the device on the PROFINET-IO, all parameters are set to default values. If these parameters are not changed by the user, the device functions with the default settings delivered by Leuze electronic.

For the default settings of the device, please refer to the following module descriptions.

10.4.3 Step 3 – Hardware configuration of the S7 PLC: Configuration

For the configuration of the PROFINET-IO system using the HW Config of the SIMATIC Manager, insert the device into your project. An IP address is now assigned to a unique device name.

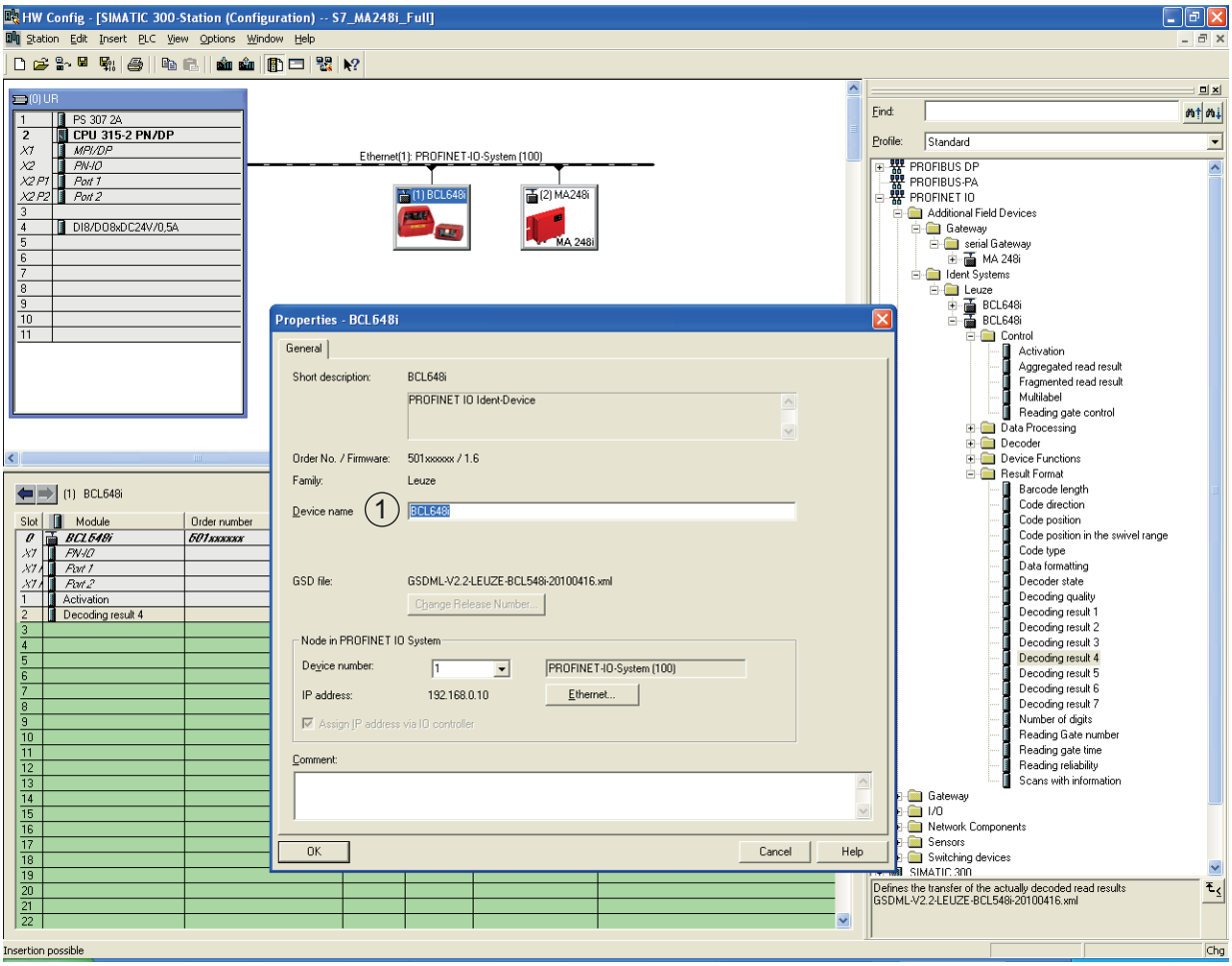

1 Device name

Figure 10.1: Assignment of the device names to IP addresses

10.4.4 Step 4 – Transfer of the configuration to the IO controller (S7 PLC)

After the correct transfer to the IO controller (S7 PLC), the PLC automatically carries out the following activities:

- Check of device names
- Assignment of the IP addresses that were configured in the HW Config to the IO devices
- Establishment of a connection between the IO controller and configured IO devices
- Cyclical data exchange

Participants that have not been named cannot be contacted yet at this point in time!

10.4.5 Step 5 – Configuration of the device name - naming the device

The PROFINET-IO device has a unique MAC address that is part of the factory settings. You can find this address on the name plate of the bar code reader.

This information is used to assign a unique, plant-specific device name (NameOfStation) to the device via the Discovery and Configuration Protocol (DCP).

The PROFINET-IO also uses the Discovery and Configuration Protocol (DCP) for the IP address assignment during each system boot-up if the IO device is located in the same subnet.

All BCL 648i participants in a PROFINET-IO network must be located in the same subnet!

Device naming

PROFINET-IO defines the “naming of the device” as the creation of a name-based relationship for a PROFINET-IO device.

Assigning the device names to the configured IO devices

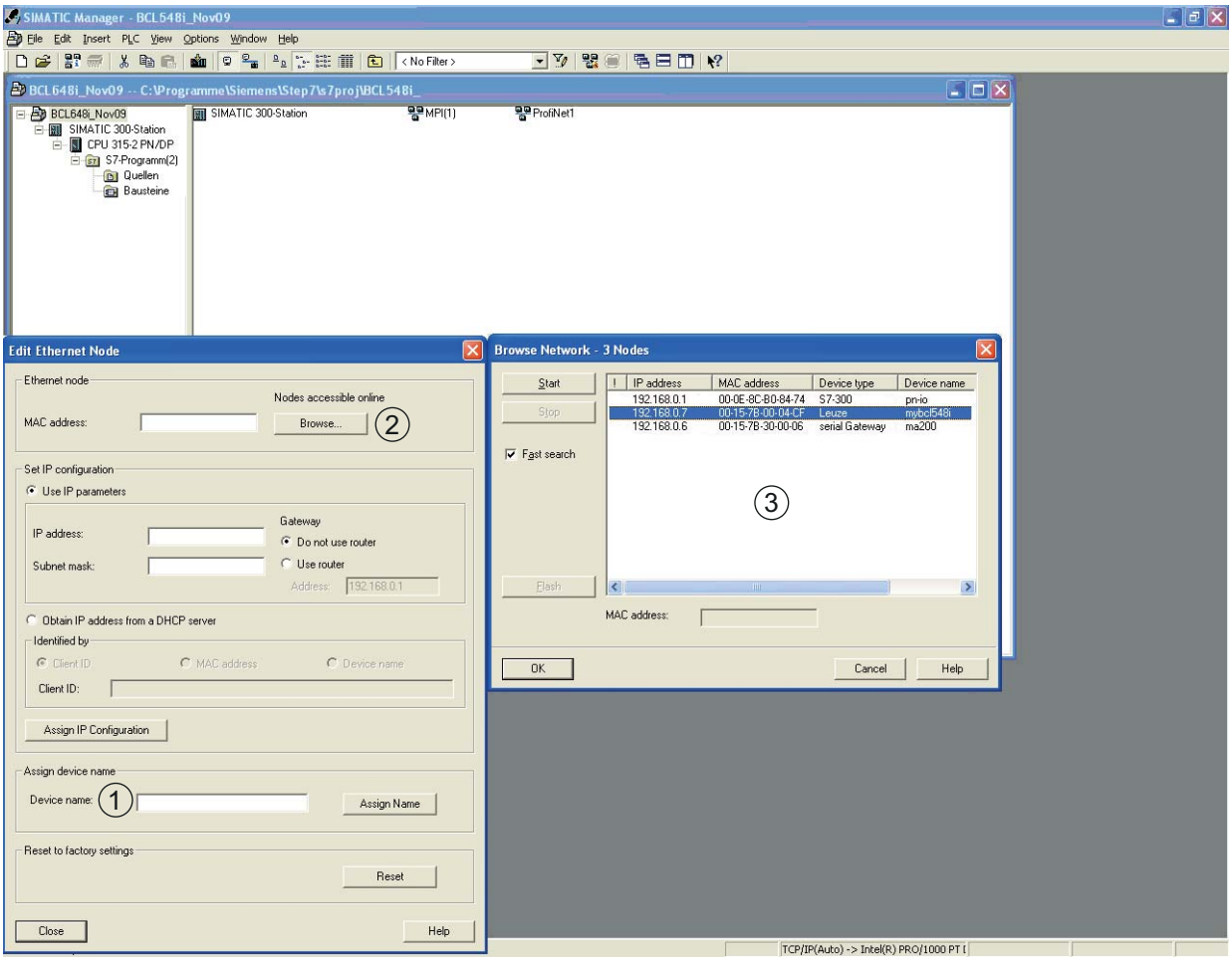

1 Device name
2 Browse button
3 MAC address selection dialog

Figure 10.2: Assigning the device names to the configured IO devices

↳ Select the respective bar code scanner for the device naming based on its MAC address. The unique device name (which must match the name in the HW Config) is then assigned to this participant.

Multiple devices can be distinguished by the MAC addresses displayed. The MAC address may be found on the name plate of the respective bar code scanner.

Assignment of MAC address - IP address -individual device name

↳ At this point, please assign an IP address (suggested by the PLC), a subnet mask and, if required, a router address, and assign this data to the named participant (device name).

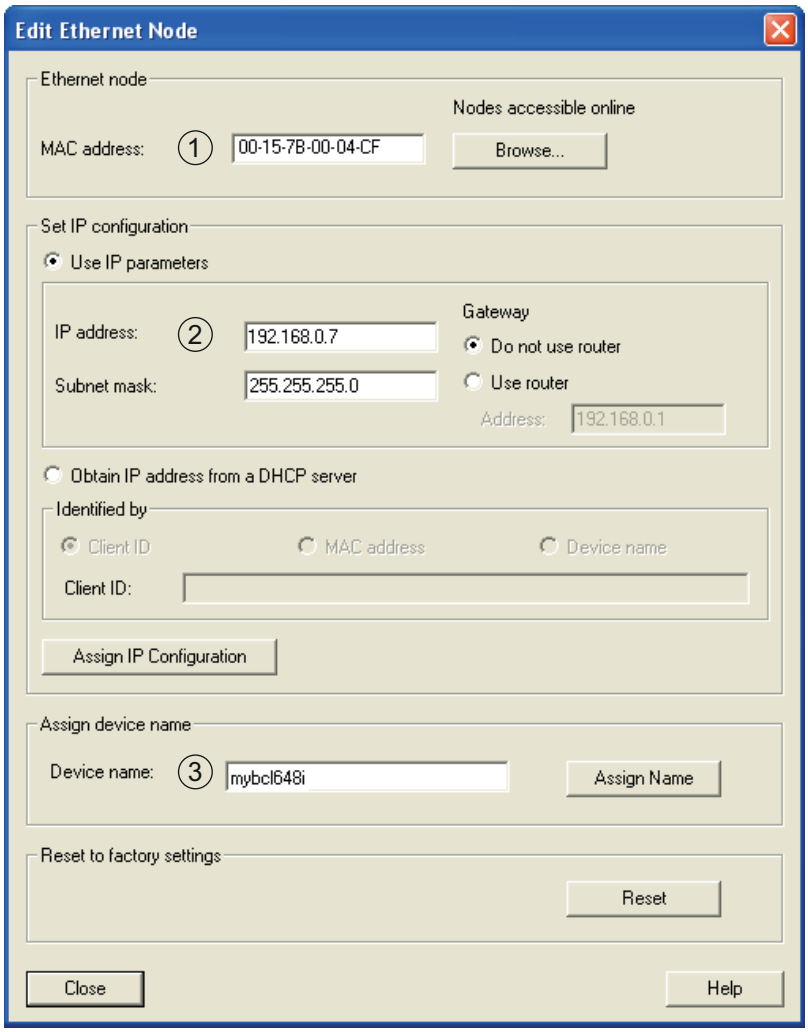

1 Ethernet node
2 Set IP configuration
3 Device name

Figure 10.3: MAC address - IP address - individual device name

Multiple devices can be distinguished by the MAC addresses displayed. The MAC address may be found on the name plate of the respective bar code scanner.

From now on, and when programming, only the unique device name (max. 255 characters) is used.

10.4.6 Step 6 – Check device names

After completing the configuration phase, recheck the device names that have been assigned. Please ensure that these names are unique and that all participants are located in the same subnet.

10.4.7 Ethernet host communication

This chapter is only of interest if an additional IP address independent of the device name is to be created for an additional communication channel, e.g. TCP/ IP. The Ethernet host communication enables the configuration of connections to an external host system. Both UDP as well as TCP/IP (in either client or server mode) can be used. The connection-free UDP protocol is used primarily to transfer process data to the host (monitor operation). The connection-oriented TCP/IP protocol can also be used to transfer commands from the host to the device. With this connection, the data is backed up by the TCP/IP protocol itself.

If you would like to use the TCP/IP protocol, you must also define whether the device is to operate as a TCP client or as a TCP server.

Both protocols can be activated simultaneously and used in parallel.

↳ Contact your network administrator to determine which communication protocol is used.

10.4.8 Manually setting the IP address

If your system does not include a DHCP server or if the IP addresses of the devices are to be set permanently, proceed as follows:

↳ Have the network administrator specify the data for IP address, net mask and gateway address of the device.

↳ Set these values on the device:

In the webConfig tool

↳ In the main menu, select Configuration -> Communication -> Ethernet interface.

If the setting is performed via the webConfig tool, the device must be restarted. Only after this restart is the set IP address accepted and does it become active.

Or alternatively in the display

Use the navigation buttons ▲▼ to move through the menu. Activate the desired selection with the enter button ↵.

↳ In the main menu, select the **Parameter menu**.

↳ Select the **Ethernet** menu item.

↳ Press the enter button to enter the menu.

↳ Select the **Ethernet interface** menu item.

↳ Press the enter button to enter the menu.

↳ Successively select the **IP address**, **Gateway** and **Net mask** menu items and set the desired values.

↳ Exit the menu with the Escape button.

The **Configuration changed, system must be restarted** message appears.

↳ Confirm with **OK** to initiate a restart and to activate the changed configuration.

10.4.9 Automatically setting the IP address

If your system includes a DHCP server which is to be used to assign the IP addresses, proceed as follows:

In the webConfig tool

↳ In the main menu, select Configuration -> Communication > Ethernet -> DHCP.

Or alternatively in the display

↳ In the main menu, select the **Parameter menu**.

↳ Select the **Ethernet** menu item.

↳ Press the enter button to enter the menu.

↳ Select the **Ethernet interface** menu item.

↳ Press the enter button to enter the menu.

↳ Select the **DHCP activated** menu item and set the desired value.

↳ Exit the menu with the Escape button.

The **Configuration changed, system must be restarted** message appears.

↳ Confirm with **OK** to initiate a restart and to activate the changed configuration.

The device responds to ping commands. A simple test to determine whether the address assignment was successful is to enter the previously configured IP address in a ping command (e.g. ping 192.168.60.101 in a command line window under Windows).

10.4.10 Address Link Label

The *Address Link Label* is an additional stick-on label that is affixed to the device.

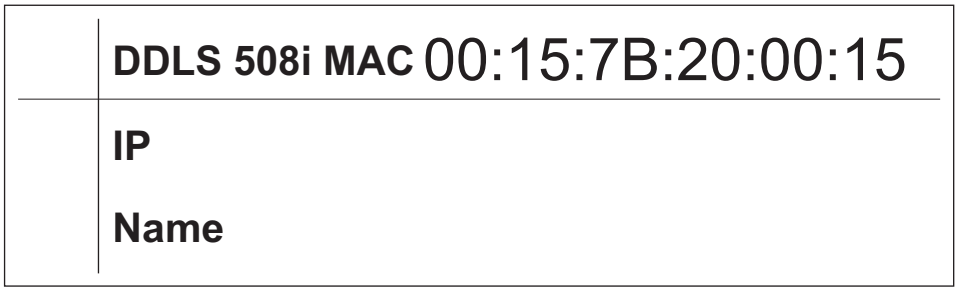

Figure 10.4: Example of an *Address Link Label*; the device type varies depending on series

- The *Address Link Label* contains the MAC address (Media Access Control address) of the device and offers the possibility to enter the IP address and the device name by hand.
  The area of the *Address Link Label* on which the MAC address is printed can be separated from the remainder of the stick-on label if necessary by means of the perforation.
- To use, the *Address Link Label* is peeled from the device and can be affixed in the installation and layout diagrams to designate the device.
- Once affixed in the documents, the *Address Link Label* establishes a unique reference between mounting location, MAC address or device, as well as the corresponding control program.
  The time-consuming searching, reading, and manually writing down of the MAC addresses of all devices installed in the system are eliminated.

Each device with Ethernet interface is uniquely identified via the MAC address assigned during production. The MAC address is also listed on the name plate of the device.

If multiple devices are commissioned in a system, the MAC address of each installed device must be correctly assigned, e.g., during programming of the control.

↳ Remove the *Address Link Label* from the device.

↳ Amend the IP address and the device name on the *Address Link Label* as necessary.

↳ Affix the “Address Link Label” in the documents, e.g., in the installation diagram, according to the position of the device.

10.4.11 TCP/IP

↳ Activate the TCP/IP protocol.

↳ Set the TCP/IP mode of the device.

In TCP client mode, the device actively establishes the connection to the superior host system (PC / PLC as server). The device requires from the user the IP address of the server (host system) and the port number on which the server (host system) accepts a connection. In this case, the device determines when and with whom a connection is established!

↳ With a device as TCP client, also set the following values:

- IP address of the TCP server (normally the PLC/host computer)
- Port number of the TCP server
- Timeout for the wait time for an answer from the server
- Repetition time for renewed communication attempt following a timeout

In TCP server mode, the superior host system (PC / PLC) actively establishes the connection and the connected device waits for the connection to be set up. The TCP/IP stack must be informed by the user as to the local port of the device (port number) on which connection requests from a client application (host system) are to be received. If there is a connection request and a connection is established by the superior host system (PC / PLC as client), the device (server mode) accepts the connection. Data can then be sent and received.

↳ With a device as TCP server, also set the following values:

- Port number for the communication of the device with the TCP clients

The corresponding adjustment options can be found:

In the webConfig tool

↳ In the main menu, select Configuration -> Communication -> Host communication.

Or alternatively in the display

↳ In the main menu, select the **Parameter menu**.

↳ In the Parameter menu, select the **Ethernet** menu item.

↳ Press the enter button to enter the menu.

↳ Select the **Host communication** menu item.

↳ Press the enter button to enter the menu.

↳ Select the **TcpIP** menu item.

↳ Press the enter button to enter the menu.

↳ Successively select the **Activated**, **Mode** and **TcpIP client** or **TcpIP server** menu items and set the desired values.

↳ Exit the menu with the Escape button.

The **Configuration changed, system must be restarted** message appears.

↳ Confirm with **OK** to initiate a restart and to activate the changed configuration.

10.4.12 UDP

The device requires from the user the IP address and the port number of the communication partner. In the same way, the host system (PC / PLC) now also requires the set IP address of the device and the selected port number. By assigning these parameters, a socket is formed via which the data can be sent and received.

↳ Activate the UDP protocol

↳ Also set the following values:

- IP address of the communication partner
- Port number of the communication partner

The corresponding adjustment options can be found:

In the webConfig tool

↳ In the main menu, select Configuration -> Communication -> Host communication.

Or alternatively in the display

↳ In the main menu, select the **Parameter menu**.

↳ In the Parameter menu, select the **Ethernet** menu item.

↳ Press the enter button to enter the menu.

↳ Select the **Host communication** menu item.

↳ Press the enter button to enter the menu.

↳ Select the **UDP** menu item.

↳ Press the enter button to enter the menu.

↳ Successively select the **Activated**, **IP address** and **Port number** menu items and set the desired values.

↳ Exit the menu with the Escape button.

The **Configuration changed, system must be restarted** message appears.

↳ Confirm with **OK** to initiate a restart and to activate the changed configuration.

All other parameters required for the reading task, such as setting the code type and number of digits, etc., are set using the engineering tool of the PLC with the aid of the various available modules (see chapter 10.5).

10.5 Commissioning via the PROFINET-IO

10.5.1 General information

The device is designed as a modular field device. As is the case for PROFIBUS devices, the PROFINET-IO functionality of the device is defined via parameter sets that are combined in modules (slots) and sub-modules (subslots). The further addressing within subslots is then accomplished via an index. The modules are included in a XML-based GSD file, which is supplied as an integral part of the device. By using a user-specific configuration tool, such as, e.g., Simatic Manager for the programmable logic control by Siemens, the required modules are integrated into a project during commissioning and its settings and parameters are adjusted accordingly. These modules are provided by the GSD file.

Reception of the input data and sending of the output data are described from the perspective of the control (IO controller).

Further information see chapter 10.4 "Configuration steps for a Siemens Simatic S7 control". For the default settings of the device, please refer to the following module descriptions.

Please note that the set data is overwritten by the PLC!

Some controls make available a so-called “universal module”. This module must not be activated for the device!

From the perspective of the device, a distinction is made between PROFINET-IO parameters and internal parameters. PROFINET-IO parameters are all parameters that can be changed via the PROFINET-IO and are described in the following modules. Internal parameters, on the other hand, can only be changed via a service interface and retain their value even following a PROFINET-IO configuration.

During the configuration phase, the BCL receives parameter telegrams from the IO controller (master). Before this is evaluated and the respective parameter values are set, all PROFINET-IO parameters are reset to default values. This ensures that the parameters of modules that are not selected are set to the default values.

10.5.2 Permanently defined parameters/device parameters

On the PROFINET-IO, parameters may be stored in modules or may be defined permanently in a PROFINET-IO participant.

The permanently defined parameters are called common parameters or device-specific parameters, depending on the configuration tool.

These parameters must always be present. They are defined outside configuration modules and are thus connected to the base module (DAP: Device Access Point) that is addressed via slot 0/subslot 0.

In Simatic Manager, the permanently defined parameters are set via object properties of the device. The module parameters are set via the module list of the selected device. By selecting the project properties of a module, the respective parameters may be set if required.

The following list contains the device parameters that are permanently defined. These parameters always exist and are available independent of the modules (DAP slot 0/subslot 0).

Table 10.2: Device parameters

Parameter	Description	Addr.	Data type	Value range	Default	Unit
Profile number	Number of the activated profile. For devices: constant with value 0.	0	UNSIGNED8	0 … 255	0	-
Code type 1	Released code type; no code means that all subsequent code tables are also deactivated. The valid number of digits also depends on the code type.	1.0 … 1.5	BitArea	0: No code 1: 2/5 Interleaved 2: Code39 3: Code32 6: UPC, UPCE 7: EAN8, EAN13 8: Code128 10: EAN Addendum 11: Codabar 12: Code93 13: GS1 DataBar Omnidirectional 14: GS1 DataBar Limited 15: GS1 DataBar Expanded	1	-
Number-of-digits mode	Specifies how the subsequent numbers of digits are to be interpreted.	2.6	Bit	0: Enumeration 1: Range	0	-
Digits 1	Decodable number of digits; in the case of a range, this number defines the lower limit.[1)]	2.0 … 2.5	UNSIGNED8	0 … 63	10	-
Digits 2	Decodable number of digits; in the case of a range, this number defines the upper limit.	3	UNSIGNED8	0 … 63	0	-
Digits 3	Decodable number of digits in the enumeration mode.	4	UNSIGNED8	0 … 63	0	-
Digits 4	Decodable number of digits in the enumeration mode.	5	UNSIGNED8	0 … 63	0	-
Digits 5	Decodable number of digits in the enumeration mode.	6	UNSIGNED8	0 … 63	0	-
Reading reliability	Min. reading reliability to be achieved in order to output a read code.	7	UNSIGNED8	1 … 100	4	-
Check digit procedure	Used check digit procedure.	8.0 … 8.6	BitArea	0: Standard check digit evaluation 1: No check digit verification 2: MOD10 Weight 3 3: MOD10 Weight 2 4: MOD10 Weight 4_9 5: MOD11 Cont 6: MOD43 7: MOD16	0	-
Check digit output	Turns the check digit output on or off.	8.7	Bit	Check digit output 0: Standard 1: Not standard	0	-
						-
Code type 2	See code type 1	9.0 … 9.5	BitArea	See code type 1	0	-
Number-of-digits mode 2	Specifies how the subsequent numbers of digits are to be interpreted.	10.6	Bit	0: Enumeration 1: Range	0	-
Digits 2.1	Decodable number of digits; in the case of a range, this number defines the lower limit.	10.0 … 10.5	UNSIGNED8	0 … 63	0	-
Digits 2.2	Decodable number of digits; in the case of a range, this number defines the upper limit.	11	UNSIGNED8	0 … 63	0	-
Digits 2.3	Decodable number of digits in the enumeration mode.	12	UNSIGNED8	0 … 63	0	-
Digits 2.4	Decodable number of digits in the enumeration mode.	13	UNSIGNED8	0 … 63	0	-
Digits 2.5	Decodable number of digits in the enumeration mode.	14	UNSIGNED8	0 … 63	0	-
Reading reliability 2	Min. reading reliability to be achieved in order to output a read code.	15	UNSIGNED8	1 … 100	4	-

Parameter	Description	Addr.	Data type	Value range	Default	Unit
Check digit procedure 2	Used check digit procedure.	16.0… 16.6	BitArea	0: Standard check digit evaluation 1: No check digit verification 2: MOD10 Weight 3 3: MOD10 Weight 2 4: MOD10 Weight 4_9 5: MOD11 Cont 6: MOD43 7: MOD16	0	-
Check digit output 2	Turns the check digit output on or off	16.7	Bit	Check digit output 0: Standard 1: Not standard	0	-
Code type 3	See code type 1	17.0 … 17.5	BitArea	See code type 1	0	-
Number-of-digits mode 3	Specifies how the subsequent numbers of digits are to be interpreted.	18.6	Bit	0: Enumeration 1: Range	0	-
Digits 3.1	Decodable number of digits; in the case of a range, this number defines the lower limit.	18.0 … 18.5	UNSIGNED8	0 … 63	0	-
Digits 3.2	Decodable number of digits; in the case of a range, this number defines the upper limit.	19	UNSIGNED8	0 … 63	0	-
Digits 3.3	Decodable number of digits in the enumeration mode.	20	UNSIGNED8	0 … 63	0	-
Digits 3.4	Decodable number of digits in the enumeration mode.	21	UNSIGNED8	0 … 63	0	
Digits 3.5	Decodable number of digits in the enumeration mode.	22	UNSIGNED8	0 … 63	0	-
Reading reliability 3	Min. reading reliability to be achieved in order to output a read code.	23	UNSIGNED8	1 … 100	4	-
Check digit procedure 3	Used check digit procedure.	24.0… 24.6	BitArea	0: Standard check digit evaluation 1: No check digit verification 2: MOD10 Weight 3 3: MOD10 Weight 2 4: MOD10 Weight 4_9 5: MOD11 Cont 6: MOD43 7: MOD16	0	-
Check digit output 3	Turns the check digit output on or off	24.7	Bit	Check digit output 0: Standard 1: Not standard	0	-
Code type 4	See code type 1	25.0 … 25.5	BitArea	See code type 1	0	-
Number-of-digits mode 4	Specifies how the subsequent numbers of digits are to be interpreted.	26.6	Bit	0: Enumeration 1: Range	0	-
Digits 4.1	Decodable number of digits; in the case of a range, this number defines the lower limit.	26.0 … 26.5	UNSIGNED8	0 … 63	0	-
Digits 4.2	Decodable number of digits; in the case of a range, this number defines the upper limit.	27	UNSIGNED8	0 … 63	0	-
Digits 4.3	Decodable number of digits in the enumeration mode.	28	UNSIGNED8	0 … 63	0	-
Digits 4.4	Decodable number of digits in the enumeration mode.	29	UNSIGNED8	0 … 63	0	
Digits 4.5	Decodable number of digits in the enumeration mode.	30	UNSIGNED8	0 … 63	0	-

Parameter	Description	Addr.	Data type	Value range	Default	Unit
Reading reliability 4	Min. reading reliability to be achieved in order to output a read code.	31	UNSIGNED8	1 … 100	4	-
Check digit procedure 4	Used check digit procedure.	32.0… 32.6	BitArea	0: Standard check digit evaluation 1: No check digit verification 2: MOD10 Weight 3 3: MOD10 Weight 2 4: MOD10 Weight 4_9 5: MOD11 Cont 6: MOD43 7: MOD16	0	-
Check digit output 4	Turns the check digit output on or off	32.7	Bit	Check digit output 0: Standard 1: Not standard	0	-

1) Specifying a 0 for the number of digits means that this entry is ignored for the device.

Parameter length

33 bytes

Input data

None

Output data

None

Notice on number of digits

If 0 is specified in a field for the number of digits, the corresponding parameter is ignored by the device firmware.

For a code table entry x, the two code lengths 10 and 12 are to be enabled. For this purpose, the following number of digit entries are necessary:

- Number of digits mode x = 0 (enumeration)
  Number of digits x.1 = 10
  Number of digits x.2 = 12
  Number of digits x.3 = 0
  Number of digits x.4 = 0
  Number of digits x.5 = 0

10.6 Overview of the project modules

When using PROFINET-IO modules, the parameters are assembled dynamically, i.e., only the parameters that were selected by the activated modules are changed.

The BCL has parameters (device parameters) that must always be present. These parameters are defined outside of modules and are thus linked to the base module (DAP).

In the current version, a total of 59 modules are available for use. A **device module** (**DAP**, see chapter 10.5.2 "Permanently defined parameters/device parameters") is used for basic device configuration and is permanently integrated into the project. Further modules may be included into the project according to requirements and application.

The modules fall into the following categories:

- Parameter module for the configuration of the device.
- Status or control modules that influence the input/output data.
- Modules that may include both parameters and control or status information.

A PROFINET-IO module defines the existence and meaning of the input and output data. In addition, it defines the necessary parameters. The arrangement of the data within a module is defined.

The composition of the input/output data is defined via the module list.

The device interprets the incoming output data and triggers the appropriate reactions in the device. The interpreter for processing the data is adapted to the module structure during initialization.

The same applies for the input data. Using the module list and the defined module properties, the input data string is formatted and referenced to the internal data.

During cyclic operation, the input data is then passed on to the IO controller.
During the startup or initialization phase, the device sets the input data to an initial value (usually 0).

The modules can be grouped together in any order in the engineering tool. Note, however, that many modules contain linked data (e.g., the decoding result modules 20-41). It is important to maintain the consistency of these data. The BCL 648i offers 59 different modules. Each of these modules may only be selected once; otherwise, the device ignores the configuration. The device checks its max. permissible number of modules. The control also reports an error if the input and output data across all selected modules exceed a total length of 1024 bytes. The specific limits of the individual modules of the device are declared in the GSD file.

The following module overview shows the characteristics of the individual modules:

Table 10.3: Module overview

Module	Description	Module identifier	Submodule identifier	Parame-ter	Outp. data	Inp. data
Device parameters	Module independent device parameters	1	0	33	0	0
Interface PN-IO	Ethernet interface description	1	1	0	0	0
Port 1	Ethernet Port 1	1	2	0	0	0
Port 2	Ethernet Port 2	1	3	0	0	0
Decoder						
Code table extension 1	Extension of the existing code table	1001	1	8	0	0
Code table extension 2	Extension of the existing code table	1002	1	8	0	0
Code table extension 3	Extension of the existing code table	1003	1	8	0	0
Code table extension 4	Extension of the existing code table	1004	1	8	0	0
Code type properties	The module permits changing the muted zones as well as the line-gap ratios	1005	1	6	0	0
Code reconstruction technology	Support of code reconstruction technology	1007	1	4	0	0
Control						
Activations	Control bits for activation of the standard reading operation	1010	1	1	0	1
Reading gate control	Extended control of the reading gate	1011	1	6	0	0
Multi-label	Output of several bar codes per reading gate	1012	1	2	1	0
Fragmented read result	Transmission of the read results in the frag-mented mode	1013	1	1	2	0
Interlinked read result	Interlinking of the individual read results within one reading gate	1014	1	1	0	0
Result Format						
Decoder state	Status display - decoding	1020	1	0	1	0
Decoding result 1	Bar code information 4 bytes max.	1021	1	0	6	0
Decoding result 2	Bar code information 8 bytes max.	1022	1	0	10	0
Decoding result 3	Bar code information 12 bytes max.	1023	1	0	14	0
Decoding result 4	Bar code information 16 bytes max.	1024	1	0	18	0
Decoding result 5	Bar code information 20 bytes max.	1025	1	0	22	0
Decoding result 6	Bar code information 24 bytes max.	1026	1	0	26	0
Decoding result 7	Bar code information 28 bytes max.	1027	1	0	30	0
Data formatting	Specification for formatting the data output	1030	1	23	0	0

Module	Description	Module identifier	Submodule identifier	Parame-ter	Outp. data	Inp. data
Reading gate number	Number of the reading gate since system start-up	1031	1	0	2	0
Reading gate time	Time between opening and closing	1032	1	0	2	0
Code position	Relative position of the bar code label in the scanning beam	1033	1	0	2	0
Reading reliability	Calculated reading reliability for the transmitted bar code	1034	1	0	2	0
Scans per bar code	Number of scans between the first and the last time of detecting the bar code	1035	1	0	2	0
Scans with information	Number of scans with processed information	1036	1	0	2	0
Decoding quality	Quality of the read result	1037	1	0	1	0
Code direction	Orientation of the bar code	1038	1	0	1	0
Number of digits	Number of digits in the bar code	1039	1	0	1	0
Code type	Bar code type	1040	1	0	1	0
Code position in the swivel range	Code position in the swivel range of an oscillat-ing mirror device	1041	1	0	2	0
Data Processing						
Characteristics filter	Configuration of the characteristics filter	1050	1	0	0	0
Data filtering	Configuration of the data filtering	1051	1	60	0	0
Segmentation acc. to the EAN pro-cess	Activation and configuration of the segmentation acc. to the EAN process	1052	1	27	0	0
Segmentation via fixed positions	Activation and configuration of the segmentation via fixed positions	1053	1	37	0	0
Segmentation acc. to identifier and separator	Activation and configuration of the segmentation acc. to identifier and separator	1054	1	29	0	0
String handling parameter	Definition of placeholder characters for bar code segmentation, filtering, completion and refer-ence code processing	1055	1	3	0	0
Device-Functions						
Device status	Display of the device status as well as control bits for reset and standby	1060	1	0	1	1
Laser control	Switch-on and switch-off positions of the laser	1061	1	4	0	0
Display	Display parameter settings	1062	1	3	0	0
Alignment	Alignment mode	1063	1	0	1	1
Oscillating mirror	Configuration of the oscillating mirror	1064	1	6	0	0
Deflection mirror	Deflection mirror parameter settings	1065	1	2	0	0
Switching inputs/ outputs SWIO or Device-IO						
Switching input/output SWIO1	Parameter settings SWIO1	1070	1	23	0	0
Switching input/output SWIO2	Parameter settings SWIO2	1071	1	23	0	0
Switching input/output SWIO3	Parameter settings SWIO3	1072	1	23	0	0
Switching input/output SWIO4	Parameter settings SWIO4	1073	1	23	0	0
SWIO status and control	Handling of switching input and switching output signals	1074	1	0	2	1
Data output						
Sorting	Sorting support	1080	1	3	0	0

Module	Description	Module identifier	Submodule identifier	Parame-ter	Outp. data	Inp. data
Reference code comparator 1	Definition of the operation mode of reference code comparator 1	1081	1	8	0	0
Reference code comparator 2	Definition of the operation mode of reference code comparator 2	1082	1	8	0	0
Reference code comparison pat-tern 1	Definition of the 1st comparison pattern	1083	1	31	0	0
Reference code comparison pat-tern 2	Definition of the 2nd comparison pattern	1084	1	31	0	0
Special Functions						
Status and control	Grouping of multiple status and control bits	1090	1	0	1	0
AutoReflAct	Automatic reflector activation	1091	1	2	0	0
AutoControl	Automatic monitoring of the reading properties	1092	1	3	1	0
multiScan over PROFINET						
multiScan master	Definition of the mode of operation of the multi-Scan master function	1100	1	10	0	0
multiScan slave addresses 1	Configuration of the slave addresses for slaves 11-20	1101	1			
multiScan slave addresses 2	Configuration of the slave addresses for slaves 21-32	1102	2			

For the standard case, at least module 10 (activation) and one of modules 21 … 27 (decoding result 1 … 7) should be integrated.

10.7 Decoder modules

10.7.1 Modules 1-4 – Code table extensions 1 to 4

PROFINET-IO module identifier

Module ID: 1001…1004

Submodule ID: 1

Description

The modules extend the code type tables of the device parameters and permit the additional definition of further 4 code types together with the respective number of digits.

Parameter

Table 10.4: Parameters for modules 1-4

Parameter	Description	Rel. Addr.	Data type	Value range	Default	Unit
Code type	Released code type; no code means that all subsequent code tables are also deactivated. The valid number of digits also depends on the code type.	0.0 … 0.5	BitArea	0: No code 1: 2/5 Interleaved 2: Code39 3: Code32 6: UPC, UPCE 7: EAN8, EAN13 8: Code128 10: EAN Addendum 11: Codabar 12: Code93 13: GS1 DataBar Omnidirectional 14: GS1 DataBar Limited 15: GS1 DataBar Expanded	0	-
Number-of-digits mode	Interpretation of the number of digits.	1.6	Bit	0: Enumeration 1: Range	0	-
Digits 1[1)]	Decodable number of digits; in the case of a range, this number defines the lower limit.	1.0 … 1.5	UNSIGNED8	0 … 63	0	-
Digits 2	Decodable number of digits; in the case of a range, this number defines the upper limit.	2	UNSIGNED8	0 … 63	0	-
Digits 3	Decodable number of digits in the enumeration mode.	3	UNSIGNED8	0 … 63	0	-
Digits 4	Decodable number of digits in the enumeration mode.	4	UNSIGNED8	0 … 63	0	-
Digits 5	Decodable number of digits in the enumeration mode.	5	UNSIGNED8	0 … 63	0	-
Reading reliability	Min. reading reliability to be achieved in order to output a read code.	6	UNSIGNED8	1 … 100	4	-
Check digit procedure	Used check digit procedure.	7.0 … 7.6	BitArea	0: Standard check digit evaluation 1: No check digit verification 2: MOD10 Weight 3 3: MOD10 Weight 2 4: MOD10 Weight 4_9 5: MOD11 Cont 6: MOD43 7: MOD16	0	-
Check digit output	Turns the check digit output on or off. Standard means that the check digit is transmitted according to the applicable standard for the selected code type. If no check digit transmission is intended for the selected code type, then “Standard” means that the check digit is not transmitted and “Not Standard” means that the check digit is transmitted anyway.	7.7	Bit	Check digit output 0: Standard 1: Not standard	0	-

1) Refer to the notice on the number of digits (see chapter 10.5.2 "Permanently defined parameters/device parameters").

Parameter length

8 bytes

Input data

None

Output data

None

10.7.2 Module 5 – Code type features (symbology)

PROFINET-IO module identifier

Module ID: 1005

Submodule ID: 1

Description

The module defines extended features for various code types.

Parameter

Table 10.5: Parameters for module 5

Parameter	Description	Addr.	Data type	Value range	Default	Unit
Maximum width deviation	Max. permitted width deviation of a character in percent of the directly adjacent character.	0	UNSIGNED8	0 … 100	15	%
Code 39 max. element ratio	Permissible ratio between maximum and minimum element of Code 39.	1	UNSIGNED8	0 … 255	8	-
Code 39 character gap	Permissible ratio for the gap between two characters for Code 39.	2	UNSIGNED8	0 … 255	3	-
Codabar max. element ratio	Permissible ratio between maximum and minimum element of the Codabar code.	3	UNSIGNED8	0 … 255	8	-
Codabar character gap	Permissible ratio for the gap between two characters for the Codabar code.	4	UNSIGNED8	0 … 255	3	-
Codabar Monarch Mode	The decoding of a Monarch bar code as Codabar bar code can be switched on or off.	5.0	Bit	0: Off 1: On	0	-
Codabar start/stop character	Switches the transmission of a start and stop character for the Codabar code on and off.	5.1	Bit	0: Off 1: On	0	-
UPC-E extension	Switches the extension of a UPC-E code to a UPC-A result on and off.	5.4	Bit	0: Off 1: On	1	-
Code 128: activate EAN header	Switches the output of the EAN header on and off.	5.5	Bit	0: Off 1: On	0	-
Code 39 conversion	Defines the conversion method used for Code 39.	5.6 … 5.7	BitArea	0: Standard (usual conversion method) 1: Standard ASCII (combination of standard method and ASCII method) 2: ASCII (This conversion method uses the entire ASCII character set)	0	-

Parameter length

6 byte

Input data

None

Output data

None

10.7.3 Module 7 – Code reconstruction technology

PROFINET-IO module identifier

Module ID: 1007

Submodule ID: 1

Description

Module for supporting the code reconstruction technology.

Parameter

Table 10.6: Parameters for module 7

Parameter	Description	Addr.	Data type	Value range	Default	Unit
Maximum width ratio	The maximum width ratio is used to determine the light zones. The light zones identify the beginning or end of patterns.	0	UNSIGNED8	0 … 255	13	-
Minimum number of elements	A pattern must have at least this minimum number of duo-elements, i.e. no patterns which have fewer duo-elements.	1 … 2	UNSIGNED16	2 … 400	6	-
Code fragment mode	This parameter can be used to switch CRT mode on and off.	3.0	Bit	0: Switched off 1: Switched on	1	-
Processing end at end of label	If this parameter is set, a decoded bar code is only completely decoded after the scanning beam has exited the entire bar code.	3.2	Bit	0: Switched off 1: Switched on	0	-

Parameter length

4 byte

Input data

None

Output data

None

Processing end at end of label:

If this parameter is set, a decoded bar code is only completely decoded after the scanning beam has exited the entire bar code. This mode is useful if the quality of the bar code is to be assessed, since more scans are now available for the quality evaluation of the bar code.

This parameter should be set if the AutoControl function is activated (see chapter 10.16.3 "Module 92 – AutoControl"). If the parameter is not set, the bar code is immediately detected and processed further as soon as all necessary bar code elements are available.

10.8 Control modules

10.8.1 Module 10 – Activations

PROFINET-IO module identifier

Module ID: 1010

Submodule ID: 1

Description

The module defines the control signals for the reading operation of the bar code reader. It is possible to select between standard reading operation and handshake operation.

In handshake operation, the controller must acknowledge the data reception via the ACK bit before the new data is written into the input area.

After acknowledging the last decoding result, the input data is reset (filled with zeros).

Parameter

Table 10.7: Parameters for module 10

Parameter	Description	Addr.	Data type	Value range	Default	Unit
Mode	The parameter defines the mode in which the activation module is operated.	0	UNSIGNED8	0: Without ACK[1)] 1: With ACK[2)]	0	-

1) corresponds to BCL34 module 18

2) corresponds to BCL34 module 19

Parameter length
1 byte

Input data
None

Output data

Table 10.8: Output data for module 10

Output data	Description	Addr.	Data type	Value range	Init value	Unit
Reading gate	Signal for activating the reading gate	0.0	Bit	1 -> 0: Reading gate off 0 -> 1: Reading gate active	0	-
	Free	0.1	Bit		0	-
	Free	0.2	Bit		0	-
	Free	0.3	Bit		0	-
Data acknowl-edgement	This control bit signals that the transmitted data have been processed by the master. Only relevant in handshake mode (with ACK).	0.4	Bit	0 -> 1: Data has been pro-cessed by the master 1 -> 0: Data has been pro-cessed by the master	0	-
Data reset	Deletes decoding results that may have been stored and resets the input data of all modules.	0.5	Bit	0 -> 1: Data reset	0	-
	Free	0.6	Bit			
	Free	0.7	Bit			

Output data length
1 byte consistent

If several bar codes are decoded in sequence without the acknowledge mode having been activated, the input data of the result modules are overwritten with the respective most recently read decoding result. If a data loss in the control is to be avoided in such a case, mode 1 (with Ack) should be activated. If multiple decoding results occur within one reading gate, it is possible - dependent on the cycle time - that only the last decoding result is visible on the bus. In this case, the acknowledge mode MUST be used. There is otherwise a risk of data loss. Multiple, individual decoding results may occur within one reading gate if module 12 – Multi-label (see chapter 10.8.3) or one of the identifier modules (see chapter 10.11) is used.

Data reset behavior:

If the data reset control bit is activated, the following actions are carried out:
1. Deletion of decoding results that may still be stored.
2. Reset of module 13 - fragmented read result (see chapter 10.8.4), i.e., even a partially transmitted read result is deleted.
3. Deletion of the input data areas of all modules. Exception: The input data of module 60 - device status (see chapter 10.12.1) is not deleted. For the status byte of decoding result modules 20 … 27 (see chapter 10.9.2), the two toggle bytes and the reading gate status remain unchanged.

10.8.2 Module 11 – Reading gate control

PROFINET-IO module identifier
Module ID: 1011
Submodule ID: 1

Description
With the module, the reading gate control of the bar code reader can be adapted to the application. With different parameters from the bar code reader, a time-controlled reading gate may be created. In addition, it defines the internal criteria for the reading gate end and the completeness inspection.

Parameter

Table 10.9: Parameters for module 11

Parameter	Description	Addr.	Data type	Value range	Default	Unit
Automatic reading gate repeat	The parameter defines the automatic repeat of reading gates.	0	Byte	0: No 1: Yes	0	-
Reading gate end mode/completeness mode	This parameter can be used to configure the completeness inspection.	1	Byte	0: Independent of decoding, i.e., the reading gate is not terminated prematurely. 1: Dependent on decoding, i.e, the reading gate is terminated if the configured number of bar codes to be decoded has been reached. 1) 2: DigitRef table-dependent, i.e., the reading gate is terminated if each bar code stored in the code type table has been decoded. 2) 3: Ident list dependent, i.e., the reading gate is terminated if each identifier stored in a list could be segmented via a respective bar code segmentation.3) 4: Reference code comparison, i.e., the reading gate is terminated if a positive reference code comparison has taken place. 4)	1	-
Restart delay	The parameter specifies a time after which a reading gate is restarted. The BCL 648i generates its own periodic reading gate. The configured time is active only if the automatic reading gate repeat is switched on.	2	UNSIGNED16	0 … 65535	0	ms
Max. reading gate time when scanning	The parameter switches off the reading gate after the set time has elapsed, thus limiting the reading gate to the set period.	4	UNSIGNED16	1 … 65535 0: Reading gate deactivation is switched off.	0	ms

1) see chapter 10.8.2 "Module 11 – Reading gate control"

2) Corresponds to the settings made via the device module (see chapter 10.5.2, see chapter 10.7.1).

3) see chapter 10.11, modules 52-54, identifier filter string

4) see chapter 10.15.3, see chapter 10.15.4

Parameter length

6 byte

Input data

None

Output data

None

10.8.3 Module 12 – Multi-label

PROFINET-IO module identifier

Module ID 1012

Submodule ID: 1

Description

The module defines extended features for various code types.

Parameter

Table 10.10: Parameters for module 12

Parameter	Description	Addr.	Data type	Value range	Default	Unit
Minimum number of bar codes	Minimum number of different bar codes scanned for per reading gate.	0	UNSIGNED8	0 … 64	0	-
Maximum number of bar codes	Maximum number of different bar codes scanned for per reading gate. Only if this number of bar codes has been reached, the reading gate is terminated prematurely.[1)]	1	UNSIGNED8	0 … 64	1	-

1) see chapter 10.8.2, Parameters “Reading gate termination mode”

Parameter length

2 bytes

Input data

Table 10.11: Input data for module 12

Input data	Description	Addr.	Data type	Value range	Default	Unit
Number of decoding results	Number of decoding results which have not been fetched.	0	UNSIGNED8	0 … 255	0	-

Input data length

1 byte

Output data

None

This module is used to set the maximum and minimum number of bar codes which are to be decoded within a reading gate.

If parameter “Minimum number of bar codes” = 0, it is not taken into account at the decoder controller. If it is not equal to 0, this means that the bar code reader expects a number of labels within the set range.

If the number of decoded bar codes is within the set limits, no additional “No Reads” are output.

When using this module, the ACK mode should be activated (see chapter 10.8.1 "Module 10 – Activations", “Mode” parameter). Otherwise there is a risk of losing decoding results if the control is not fast enough.

10.8.4 Module 13 – Fragmented read result

PROFINET-IO module identifier

Module ID: 1013

Submodule ID: 1

Description

The module defines the transfer of fragmented read results. To occupy few i/o-data, the read results may be split into several fragments with this module. The fragments can then be transmitted one after another with a handshake.

Parameter

Table 10.12: Parameters for module 13

Parameter	Description	Addr.	Data type	Value range	Default	Unit
Fragment length	The parameter defines the maximum length of the bar code information per fragment.	0	UNSIGNED8	1 … 28	1	-

Parameter length

1 byte

Input data

Table 10.13: Input data for module 13

Input data	Description	Addr.	Data type	Value range	Default	Unit
Fragment number	Current fragment number	0.0 … 0.3	Bitarea	0 … 15	0	-
Remaining fragments	Number of fragments which still have to be read for a complete result.	0.4 … 0.7	Bitarea	0 … 15	0	-
Fragment size	Fragment length, always corresponds to the configured fragment length, except for the last fragment.	1	UNSIGNED8	0 … 28	0	-

Input data length

2 byte consistent

Output data

None

10.8.5 Module 14 – Interlinked read result

PROFINET-IO module identifier

Module ID: 1014

Submodule ID: 1

Description

This module is used to switch to a mode in which all decoding results within one reading gate are combined into a single read result.

Parameter

Table 10.14: Parameters for module 14

Parameter	Description	Rel. Addr.	Data type	Value range	Default	Unit
Separator character	This parameter is used to define a delimiter that is inserted between two individual decoding results.	0	UNSIGNED8	1 … 255 0: No delimiter is used.	';'	-

Parameter length

1 byte

Input data

None

Output data

None

An interlinked read result also requires module 12 – Multi-label. In this mode, the additional information transmitted in modules 31ff relates to the last decoding result in the chain.

10.9 Result Format

In the following various modules for the output of decoding results are listed. They have the same structure but different output lengths. The PROFINET-IO module concept does not cater for modules of variable data length.

Modules 20 … 27 are, thus, to be regarded as alternatives and should not be used in parallel. Modules 30 … 41, on the other hand, can be combined freely with the decoding result modules.

10.9.1 Module 20 – Decoder state

PROFINET-IO module identifier

Module ID: 1020
Submodule ID: 1

Description

The module indicates the state of the decoding and of the automatic decoder configuration.

Parameter

None

Input data

Table 10.15: Input data for module 20

Input data	Description	Addr.	Data type	Value range	Init value	Unit
Reading gate state	The signal indicates the current state of the reading gate[1)].	0.0	Bit	0: Off 1: On	0	-
New result	The signal indicates whether a new decoding has occurred.	0.1	Bit	0: No 1: Yes	0	-
Result state	The signal indicates whether the bar code has been read successfully.	0.2	Bit	0: Successful reading 1: NOREAD	0	-
Further results in the buffer	The signal indicates whether further results are in the buffer.	0.3	Bit	0: No 1: Yes	0	-
Buffer overflow	The signal indicates that result buffers are occupied and the decoder rejects data.	0.4	Bit	0: No 1: Yes	0	-
New decoding	Toggle bit indicates whether decoding has occurred.	0.5	Bit	0->1: New result 1->0: New result	0	-
Result state	Toggle bit indicates that the bar code has not been read.	0.6	Bit	0->1: NOREAD 1->0: NOREAD	0	-
Waiting for acknowledgement	This signal represents the internal state of the control.	0.7	Bit	0: Base state 1: Control waiting for acknowledgement from the IO controller	0	-

1) Attention: This does not necessarily correspond to the state at the time the bar code is scanned

Input data length

1 byte

Output data

None

Remarks

The following bits are constantly updated, i.e. they are updated immediately after the respective event occurs:

Reading gate state

- Further results in the buffer
- Buffer overflow
- Waiting for acknowledgement

All other flags refer to the currently output decoding result. If the input data is reset to the init. value, the following bits are deleted (see chapter 10.9.3 "Module 30 – Data formatting"):

- New result
- Result state

All others remain unchanged.

Data reset behavior:

Upon data reset the input data is deleted, except for the reading gate status and the two toggle bits (see chapter 10.8.1 "Module 10 – Activations").

10.9.2 Modules 21-27 – Decoding result

PROFINET-IO module identifier

Module ID: 1021...1027

Submodule ID: 1

Description

The module defines the transfer of the actually decoded read results. The data is transmitted consistently over the entire range.

Parameter

None

Input data

Table 10.16: Input data for modules 21 … 27

Module no.	Parameter	Description	Addr.	Data type	Value range	Default	Unit
21 … 27	Reading gate state	The signal indicates the current state of the reading gate.[1)]	0.0	Bit	0: Off 1: On	0	-
21 … 27	New result	Signal indicates whether a new decoding result is present.	0.1	Bit	0: No 1: Yes	0	-
21 … 27	Result state	Signal indicates whether the bar code has been read successfully.	0.2	Bit	0: Successful reading 1: NOREAD	0	-
21 … 27	Further results in the buffer	Signal indicates whether further results are in the buffer.	0.3	Bit	0: No 1: Yes	0	-
21 … 27	Buffer overflow	Signal indicates that result buffers are occupied and the decoder rejects data.	0.4	Bit	0: No 1: Yes	0	-
21 … 27	New result	Toggle bit, indicates that a new decoding result is present.	0.5	Bit	0->1: New result 1->0: New result	0	-
21 … 27	Result state	Toggle bit indicates that the bar code has not been read.	0.6	Bit	0->1: NOREAD 1->0: NOREAD	0	-
21 … 27	Waiting for acknowledgement	This signal represents the internal state of the control.	0.7	Bit	0: Base state 1: Control waiting for acknowledgement from the IO controller	0	-
21 … 27	Bar code data length	Data length of the actual bar code information.[2)]	1	UNSIGNED8	0-48	0	-
21	Data	Bar code information with a length of consistently 4 bytes.	2..	4x UNSIGNED8	0-FFh	0	-
22	Data	Bar code information with a length of consistently 8 bytes.	2..	8x UNSIGNED8	0-FFh	0	-
23	Data	Bar code information with a length of consistently 12 bytes.	2..	12x UNSIGNED8	0-FFh	0	-
24	Data	Bar code information with a length of consistently 16 bytes.	2..	16x UNSIGNED8	0-FFh	0	-
25	Data	Bar code information with a length of consistently 20 bytes.	2..	20x UNSIGNED8	0-FFh	0	-
26	Data	Bar code information with a length of consistently 24 bytes.	2..	24x UNSIGNED8	0-FFh	0	-

Module no.	Parameter	Description	Addr.	Data type	Value range	Default	Unit
27	Data	Bar code information with a length of consistently 28 bytes.	2..	28x UNSIGNED8	0-FFh	0	-
28	Data	Bar code information with a length of consistently 64 bytes.	2..	64x UNSIGNED8	0-FFh	0	-
29	Data	Bar code information with a length of consistently 128 bytes.	2..	128x UNSIGNED8	0-FFh	0	-

1) Attention: This does not necessarily correspond to the state at the time the bar code is scanned

2) If the bar code information (bar code and, possibly, other items such as the check sum) fits in the selected module width, this value reflects the length of the transmitted data. A value larger than the module width indicates a loss of information caused by a module width which has been selected too small.

Input data

2 bytes consistently + 4..128 bytes of bar code information depending on the module

Output data

None

Remarks

The remarks for module 20 – decoder state, apply in an analogous manner. In addition, all bytes beginning with address 1 are reset to the init. value.

Shortening decoding results that are too long: If the bar code information (bar code possibly including supplementary information such as the check sum) does not fit in the selected module width, the decoding results are shortened. This shortening is either from the left or the right depending on the setting in module 30 – Data formatting.

Shortening is indicated by the passed bar code data length.

10.9.3 Module 30 – Data formatting

PROFINET-IO module identifier

Module ID: 1030

Submodule ID: 1

Description

The module defines the output string for the case that the BCL 648i could not read a bar code. In addition, the initialization of the data fields and the definition of unused data ranges may be set.

Parameter

Table 10.17: Parameters for module 30

Parameter	Description	Addr.	Data type	Value range	Default	Unit
Text in the case of misreading	The parameter defines the output characters if no bar code could be read.	0	STRING 20 characters null terminated	1 … 20 bytes of ASCII characters	63 („?“)	-
Decoding result at reading gate start	The parameter defines the state of the data at the start of the reading gate.	20.5	Bit	0: Input data remain on the old value 1: Input data is reset to the init value	0	-
Data alignment	The parameter defines the alignment of the data in the result field[1)]	21.1	Bit	0: Left-justified 1: Right-justified	0	-
Fill mode	The parameter defines the fill mode for the unoccupied data ranges	21.4 … 21 .7	Bitarea	0: No fill up 3: Fill up to the transmission length	3	-
Fill character	The parameter defines the character which is used for filling up the data ranges.	22	UNSIGNED8	0 … FFh	0	-

1) and thus also controls possible shortening of a decoding result that is too large.

Parameter length
23 byte

Input data
None

Output data
None

Comment
The "decoding result at reading gate start" parameter is only taken into account if the "Without ACK" mode is set (see chapter 10.8.1 "Module 10 – Activations").

The text for erroneous readings does not permit the use of ASCII characters that cannot be displayed (<0x20h).

10.9.4 Module 31 – Reading gate number

PROFINET-IO module identifier
Module ID: 1031
Submodule ID: 1

Description
The module defines input data for the communication of the number of reading gates since system start.

Parameter
None

Input data

Table 10.18: Input data for module 31

Input data	Description	Addr.	Data type	Value range	Init value	Unit
Reading gate number	The BCL 648i transmits the current reading gate number. The reading gate number is initialized with the system start and is then incremented continuously. At 65535, an overflow occurs and the counter starts afresh from 0.	0 … 1	UNSIGNED16	0 … 65535	0	-

Input data length
2 byte consistent

Output data
None

10.9.5 Module 32 – Reading gate time

PROFINET-IO module identifier
Module ID: 1032
Submodule ID: 1

Description
This module returns the time between opening and closing of the last reading gate.

Parameter
None

Input data

Table 10.19: Input data for module 32

Input data	Description	Addr.	Data type	Value range	Init value	Unit
Opening duration of the reading gate	Opening duration of the last reading gate in ms.	0 … 1	UNSIGNED16	0 … 65535 If the range is exceeded, the value remains at 65535	0	ms

Input data length
2 byte consistent

Output data
None

10.9.6 Module 33 – Code position

PROFINET-IO module identifier
Module ID: 1033
Submodule ID: 1

Description
The module defines input data for the communication of the relative bar code position in the laser beam.

Parameter
None

Input data

Table 10.20: Input data for module 33

Input data	Description	Addr.	Data type	Value range	Init value	Unit
Code position	Relative position of the bar code in the scanner beam. The position is normalized to the zero position (middle position). Specified in 1/10 degrees.	0 … 1	SIGNED16	±450	0	1/10 degree

Input data length
2 byte consistent

Output data
None

10.9.7 Module 34 – Reading reliability (equal scans)

PROFINET-IO module identifier
Module ID: 1034
Submodule ID: 1

Description
The module defines the input data for the communication of the calculated reading reliability. The value refers to the currently output bar code.

Parameter
None

Input data

Table 10.21: Input data for module 34

Input data	Description	Addr.	Data type	Value range	Init value	Unit
Reading reliability (Equal scans)	Calculated reading reliability for the transmitted bar code.	0 … 1	UNSIGNED16	0 … 65535	0	-

Input data length
2 byte consistent

Output data
None

10.9.8 Module 35 – Bar code length

PROFINET-IO module identifier
Module ID: 1035
Submodule ID: 1

Description
The module defines the input data for the communication of the length of the currently output bar code.

Parameter
None

Input data

Table 10.22: Input data for module 35

Input data	Description	Addr.	Data type	Value range	Init value	Unit
Bar code length	Length/duration of the currently output bar code, beginning with the code position specified in module 35 in 1/10 degrees.	0 … 1	UNSIGNED16	1 … 900	1	1/10 degree

Input data length
2 byte consistent

Output data
None

10.9.9 Module 36 – Scans with information

PROFINET-IO module identifier
Module ID: 1036
Submodule ID: 1

Description
The module defines input data for the communication of the calculated number of scans which provided information contributing to the result of the bar code.

Parameter
None

Input data

Table 10.23: Input data for module 36

Input data	Description	Addr.	Data type	Value range	Init value	Unit
Scans with information per bar code	See above	0 … 1	UNSIGNED16	0 … 65535	0	-

Input data length
2 byte consistent

Output data
None

10.9.10 Module 37 – Decoding quality

PROFINET-IO module identifier

Module ID: 1037

Submodule ID: 1

Description

The module defines input data for the communication of the calculated decoding quality of the currently transmitted bar code.

Parameter

None

Input data

Table 10.24: Input data for module 37

Input data	Description	Addr.	Data type	Value range	Init value	Unit
Decoding quality	Decoding quality of the transmitted bar code	0	UNSIGNED8	0 … 100	0	1%

Input data length

1 byte consistent

Output data

None

10.9.11 Module 38 – Code direction

PROFINET-IO module identifier

Module ID: 1038

Submodule ID: 1

Description

The module defines input data for the communication of the detected code direction of the currently transmitted bar code.

Parameter

None

Input data

Table 10.25: Input data for module 38

Input data	Description	Addr.	Data type	Value range	Init value	Unit
Code direction	Code direction of the transmitted bar code	0	UNSIGNED8	0: Normal 1: Inverted 2: Unknown	0	-

Input data length

1 byte

Output data

None

Comment:

A decoding result of type “No Read” has as code direction the value 2 = unknown!

10.9.12 Module 39 – Number of digits

PROFINET-IO module identifier

Module ID: 1039

Submodule ID: 1

Parameter

The module defines input data for the communication of the number of digits of the currently transmitted bar code.

Description

None

Input data

Table 10.26: Input data for module 39

Input data	Description	Addr.	Data type	Value range	Init value	Unit
Number of digits	Number of digits of the transmitted bar code	0	UNSIGNED8	0 … 48	0	-

Input data length

1 byte

Output data

None

10.9.13 Module 40 – Code type (symbology)

PROFINET-IO module identifier

Module ID: 1040

Submodule ID: 1

Description

The module defines the input data for the communication of the code type of the currently transmitted bar code.

Parameter

None

Input data

Table 10.27: Input data for module 40

Input data	Description	Addr.	Data type	Value range	Init value	Unit
Code type (symbology)	Code type of the transmitted bar code	0	UNSIGNED8	0: No code 1: 2/5 Interleaved 2: Code39 6: UPC, UPCE 7: EAN8, EAN13 8: Code128, EAN128 10: EAN Addendum 11: Codabar 12: Code93 13: GS1 DataBar Omnidirectional 14: GS1 DataBar Limited 15: GS1 DataBar Expanded	0	-

Input data length

1 byte

Output data

None

10.9.14 Module 41 – Code position in the swivel range

PROFINET-IO module identifier

Module ID: 1041

Submodule ID: 1

Description

The module defines input data for the communication of the relative bar code position in the swivel range of an oscillating mirror device.

Parameter

None

Input data

Table 10.28: Input data for module 41

Input data	Description	Addr.	Data type	Value range	Init value	Unit
Position in the swivel range	Relative position of the bar code in the swivel range. The position is normalized to the zero position (middle position). Specified in 1/10 degrees.	0 … 1	SIGNED16	-200 … +200	0	1/10°

Input data length

2 bytes

Output data

None

10.10 Data Processing

10.10.1 Module 50 – Characteristics filter

PROFINET-IO module identifier

Module ID: 1050

Submodule ID: 1

Description

Configuration of the characteristics filter. This filter can be used to set how bar codes with identical content are handled and what criteria are to be taken into account in determining the likeness.

Parameter

Table 10.29: Parameters for module 50

Parameter	Description	Addr.	Data type	Value range	Default	Unit
Handling of identical bar code information	Determines how bar codes with the same content are to be managed	0	UNSIGNED8	0: All bar codes are stored and output. 1: Only non-identical bar code contents are output.	1	-
Comparison parameter - code type	If this criterion has been activated, the bar code type is used to determine whether the bar codes are identical.	1.0	Bit	0: deactivated 1: activated	1	-
Comparison parameter - bar code content	If this criterion has been activated, the bar code content is used to determine whether the bar codes are identical.	1.1	Bit	0: deactivated 1: activated	1	-
Comparison parameter - bar code direction	If this criterion has been activated, the bar code direction is used to determine whether the bar codes are identical.	1.2	Bit	0: deactivated 1: activated	1	-

Parameter	Description	Addr.	Data type	Value range	Default	Unit
Comparison parameter - scan position	If this parameter is not equal to 0, the bar code position in the scanning beam is used to determine whether identical bar codes have already been decoded. In this case, a +/- bandwidth in degrees must be specified, within which the same bar code is permitted to be in the scanning beam.	2 … 3	UNSIGNED16	0 … 450	0	1/10 degree
Comparison parameter - oscillating mirror position	If this parameter is not equal to 0, the bar code position in the swivel range of the oscillating mirror is used to determine whether identical bar codes have already been decoded. A +/- bandwidth in degrees must then be specified, within which the same bar code is permitted to be in the oscillating mirror swivel range.	4 … 5	UNSIGNED16	0 … 200	0	1/10 degree
Comparison parameter - scanning time info	If this parameter is not equal to 0, the decoding time (time at which the bar code was decoded) is used to determine whether identical bar codes have already been detected. Here, a difference time specified in milliseconds ensures that identical bar codes may only occur within this time.	6 … 7	UNSIGNED16	0 … 65535	0	ms

Parameter length

8 byte

Input data

None

Output data

None

All comparison criteria are AND linked; this means all active comparisons must be fulfilled before the just-decoded bar code can be identified as already decoded and then deleted.

10.10.2 Module 51 – Data filtering

PROFINET-IO module identifier

Module ID: 1051

Submodule ID: 1

Description

Configuration of the data filter.

Parameter

Table 10.30: Parameters for module 51

Parameter	Description	Addr.	Data type	Value range	Default	Unit
Bar code filter string 1	Filter expression 1	0	STRING 30 characters null terminated	1 … 30 bytes of ASCII characters	*	-
Bar code filter string 2	Filter expression 2	30	STRING 30 characters null terminated	1 … 30 bytes of ASCII characters	\00	-

Parameter length

60 byte

Input data

None

Output data

None

Filter string

The filter string is used to define passthrough filters for bar codes.

An arbitrary number of '?' are permitted as placeholders for an arbitrary character at exactly this position. Also permitted are '*' as placeholders for a character sequence of arbitrary length, and an 'x' if the character at the respective position is to be deleted.

ASCII characters that cannot be displayed (<0x20h) must not be used.

10.11 Identifier

The following modules can be used to specify the segmentation process to be used when extracting identifiers from the bar code data.

When a module is configured, the associated segmentation process is activated. If none of the modules is configured, no segmentation takes place.

Therefore, the modules can only be used one at a time and not simultaneously.

When using one of the following modules, multiple results may occur within a reading gate.

If there are multiple results, acknowledge mode must be used; data may otherwise be lost (see chapter 10.8.1 "Module 10 – Activations", “Mode” parameter and the additional notices)!

10.11.1 Module 52 – Segmentation according to the EAN process

PROFINET-IO module identifier

Module ID: 1052

Submodule ID: 1

Description

The module activates the segmentation according to the EAN process. The parameters specify the identifiers to searched for and the output mode.

Parameter

Table 10.31: Parameters for module 52

Parameter	Description	Addr.	Data type	Value range	Default	Unit
Identifier list						
Identifier 1	The identifier string is used for the identifier list and the filtering according to the segmentation.	0	STRING 5 characters null terminated	1 … 5 bytes of ASCII characters	'*'	-
Identifier 2	See identifier 1.	5	STRING 5 characters null terminated	1 … 5 bytes of ASCII characters	\0	-
Identifier 3	See identifier 1.	10	STRING 5 characters null terminated	1 … 5 bytes of ASCII characters	\0	-
Identifier 4	See identifier 1.	15	STRING 5 characters null terminated	1 … 5 bytes of ASCII characters	\0	-
Identifier 5	See identifier 1.	20	STRING 5 characters null terminated	1 … 5 bytes of ASCII characters	\0	-
Output with identifier	If this switch is not set, the output of the identifiers is suppressed. Only the data values that belong to the identifiers are displayed in this case.	25.0	Bit	0: Output of the identifiers is suppressed. 1: Identifiers are output.	1	-
Output delimiter	This delimiter, if not equal to 0, is inserted between the identifier and the associated data value in the output.	26	UNSIGNED8	0 … 127	0	-

Parameter length

27 byte

Input data

None

Output data

None

Identifier string n (n = 1 … 5)

The identifier string defines both the identifier list for the segmentation and the passthrough filter for the subsequent filtering.

The string may contain wildcards. That is, an arbitrary number of '?' are permitted as placeholders for an arbitrary character at exactly that position.

Also permitted are '*' as placeholders for a character sequence of arbitrary length, and an 'x' if the character at the respective position is to be deleted. There are a total of 5 identifier strings.

An identifier with less than 5 characters must be null terminated. However, if the identifier string consists of exactly 5 characters, it does not have to be null terminated.

ASCII characters that cannot be displayed (<0x20h) must not be used in the identifier strings.

10.11.2 Module 53 – Segmentation via fixed positions

PROFINET-IO module identifier

Module ID: 1053

Submodule ID: 1

Description

The module activates the segmentation via fixed positions. The parameters specify the identifiers to be searched for, the output mode, and the positions.

Parameter

Table 10.32: Parameters for module 53

Parameter	Description	Addr.	Data type	Value range	Default	Unit
Identifier list						
Identifier 1	The identifier string is used for the identifier list and the filtering according to the segmentation.	0	STRING 5 characters null terminated	1 … 5 bytes of ASCII characters	'*'	-
Identifier 2	See identifier 1.	5	STRING 5 characters null terminated	1 … 5 bytes of ASCII characters	\0	-
Identifier 3	See identifier 1.	10	STRING 5 characters null terminated	1 … 5 bytes of ASCII characters	\0	-
Identifier 4	See identifier 1.	15	STRING 5 characters null terminated	1 … 5 bytes of ASCII characters	\0	-
Identifier 5	See identifier 1.	20	STRING 5 characters null terminated	1 … 5 bytes of ASCII characters	\0	-
Identifier output						

Parameter	Description	Addr.	Data type	Value range	Default	Unit
Output with identifier	If this switch is not set, the output of the identifiers is suppressed. Only the data values that belong to the identifiers are displayed in this case.	25.0	Bit	0: Output of the identifiers is suppressed. 1: Identifiers are output.	1	-
Output delimiter	This delimiter, if not equal to 0, is inserted between the identifier and the associated data value in the output.	26	UNSIGNED8	0 … 127	0	-
Fixed positions						
Start position of the 1st identifier	Specifies the position of the first character of the first identifier in the data string of the bar code. The first character in the bar code has position 1. If the parameter is = 0, it is deactivated.	27	UNSIGNED8	0 … 127	0	-
Start position of the 1st data value	Specifies the position of the first character of the first data value in the data string of the bar code. The first character in the bar code has position 1. If the parameter is = 0, it is deactivated.	28	UNSIGNED8	0 … 127	0	-
Start position of the 2nd identifier	Specifies the position of the first character of the second identifier in the data string of the bar code. The first character in the bar code has position 1. If the parameter is = 0, it is deactivated.	29	UNSIGNED8	0 … 127	0	-
Start position of the 2nd data value	Specifies the position of the first character of the second data value in the data string of the bar code. The first character in the bar code has position 1. If the parameter is = 0, it is deactivated.	30	UNSIGNED8	0 … 127	0	-
Start position of the 3rd identifier	Specifies the position of the first character of the third identifier in the data string of the bar code. The first character in the bar code has position 1. If the parameter is = 0, it is deactivated.	31	UNSIGNED8	0 … 127	0	-
Start position of the 3rd data value	Specifies the position of the first character of the third data value in the data string of the bar code. The first character in the bar code has position 1. If the parameter is = 0, it is deactivated.	32	UNSIGNED8	0 … 127	0	-
Start position of the 4th identifier	Specifies the position of the first character of the fourth identifier in the data string of the bar code. The first character in the bar code has position 1. If the parameter is = 0, it is deactivated.	33	UNSIGNED8	0 … 127	0	-
Start position of the 4th data value	Specifies the position of the first character of the fourth data value in the data string of the bar code. The first character in the bar code has position 1. If the parameter is = 0, it is deactivated.	34	UNSIGNED8	0 … 127	0	-
Start position of the 5th identifier	Specifies the position of the first character of the fifth identifier in the data string of the bar code. The first character in the bar code has position 1. If the parameter is = 0, it is deactivated.	35	UNSIGNED8	0 … 127	0	-
Start position of the 5th data value	Specifies the position of the first character of the fifth data value in the data string of the bar code. The first character in the bar code has position 1. If the parameter is = 0, it is deactivated.	36	UNSIGNED8	0 … 127	0	-

Parameter length

37 byte

Input data

None

Output data

None

Identifier string n (n = 1 … 5)

The identifier string defines both the identifier list for the segmentation and the passthrough filter for the subsequent filtering.

The string may contain wildcards. That is, an arbitrary number of '?' are permitted as placeholders for an arbitrary character at exactly that position.

Also permitted are '*' as placeholders for a character sequence of arbitrary length, and an 'x' if the character at the respective position is to be deleted. There are a total of 5 identifier strings.

An identifier with less than 5 characters must be null terminated. However, if the identifier string consists of exactly 5 characters, it does not have to be null terminated.

ASCII characters that cannot be displayed (<0x20h) must not be used in the identifier strings.

10.11.3 Module 54 – Segmentation according to identifier and separator

PROFINET-IO module identifier

Module ID: 1054

Submodule ID: 1

Description

This module activates the segmentation according to identifier and separator. The parameters specify the identifiers to be searched for, the output mode, and the parameters for the identifier/separator algorithm.

Parameter

Table 10.33: Parameters for module 54

Parameter	Description	Addr.	Data type	Value range	Default	Unit
Identifier list						
Identifier 1	The identifier string is used for the identifier list and the filtering according to the segmentation.	0	STRING 5 characters null terminated	1 … 5 bytes of ASCII characters	'*'	-
Identifier 2	See identifier 1.	5	STRING 5 characters null terminated	1 … 5 bytes of ASCII characters	\0	-
Identifier 3	See identifier 1.	10	STRING 5 characters null terminated	1 … 5 bytes of ASCII characters	\0	-
Identifier 4	See identifier 1.	15	STRING 5 characters null terminated	1 … 5 bytes of ASCII characters	\0	-
Identifier 5	See identifier 1.	20	STRING 5 characters null terminated	1 … 5 bytes of ASCII characters	\0	-
Identifier output						
Output with identifier	If this switch is not set, the output of the identifiers is suppressed. Only the data values that belong to the identifiers are displayed in this case.	25.0	Bit	0: Output of the identifiers is suppressed. 1: Identifiers are output.	1	-
Output delimiter	This delimiter, if not equal to 0, is inserted between the identifier and the associated data value in the output.	26	UNSIGNED8	0 … 127	0	-

Parameter	Description	Addr.	Data type	Value range	Default	Unit
Segmentation acc. to identifier and separator						
Identifier length	Fixed length of all identifiers in the segmentation process. After this length, the text of the identifier ends and the associated data value starts. The end of the data value is determined by the separator.	27	UNSIGNED8	0 … 255	0	-
Delimiter in the identifier/separator algorithm	The separator terminates the data value that follows its identifier directly after the identifier length. After the separator, the next identifier starts.	28	UNSIGNED8	0 … 127	0	-

Parameter length

29 byte

Input data

None

Output data

None

Identifier string n (n = 1 … 5)

The identifier string defines both the identifier list for the segmentation and the passthrough filter for the subsequent filtering.

The string may contain wildcards. That is, an arbitrary number of '?' are permitted as placeholders for an arbitrary character at exactly that position.

Also permitted are '*' as placeholders for a character sequence of arbitrary length, and an 'x' if the character at the respective position is to be deleted. There are a total of 5 identifier strings.

An identifier with less than 5 characters must be null terminated. However, if the identifier string consists of exactly 5 characters, it does not have to be null terminated.

ASCII characters that cannot be displayed (<0x20h) must not be used in the identifier strings.

10.11.4 Module 55 – String handling parameters

PROFINET-IO module identifier

Module ID: 1055

Submodule ID: 1

Description

This module is used to configure placeholder characters for the bar code segmentation, filtering, termination, and reference code processing.

Parameter

Table 10.34: Parameters for module 55

Parameter	Description	Addr.	Data type	Value range	Default	Unit
Wildcard character	This parameter is similar to the “don't care character” parameter. The difference between this and the “don't care character” is that all subsequent characters, and not only one character at a certain position, are disregarded until a character pattern is found in the string that follows the wildcard character pattern. This character has the same behavior as the wildcard character for the DIR command in the command line interpreter under Windows.	0	UNSIGNED8	32 … 126	‘*‘	-
Don’t care character	Placeholder character. Characters at the position of the placeholder character are ignored in a comparison. This permits certain areas to be masked.	1	UNSIGNED8	32 … 126	‘?‘	-
Delete character	Delete character for bar code and identifier filtering (characters at the position of the delete character are deleted in a comparison. This permits certain areas to be deleted).	2	UNSIGNED8	32 … 126	‘x‘	-

Parameter length

3 byte

Input data

None

Output data

None

10.12 Device Functions

10.12.1 Module 60 – Device status

PROFINET-IO module identifier

Module ID: 1060

Submodule ID: 1

Description

The module contains the display of the device status as well as control bits for triggering a reset or putting the device into standby mode.

Parameter

None

Input data

Table 10.35: Input data for module 60

Input data	Description	Addr.	Data type	Value range	Init value	Unit
Device status	This byte represents the device status	0	UNSIGNED8	0: Device is ready 1: Initialization 10: Standby 11: Service 12: Diagnosis 13: Parameter enabled 15: Device is ready 0x80: Error 0x81: Warning	0	-

Input data length

1 byte

Output data

Table 10.36: Input data for module 60

Output data	Description	Addr.	Data type	Value range	Init value	Unit
System reset	The control bit triggers a system reset if the level changes from 0 to 1	0.6	Bit	0: Run 0 -> 1: Reset	0	-
Standby	Activates the standby function	0.7	Bit	0: Standby off 1: Standby on	0	-

NOTICE
Analogous to command H, activation of the system reset bit triggers a restart of all electronics, incl. a restart of the PROFINET-IO stack. I.e. the device restarts.

Output data length

1 byte

When resetting the data the input data of this module is not deleted (see chapter 10.8.1 "Module 10 – Activations").

10.12.2 Module 61 – Laser control

PROFINET-IO module identifier

Module ID: 1061

Submodule ID: 1

Description

This module defines the switch-on and switch-off position of the laser.

Parameter

Table 10.37: Parameters for module 61

Parameter	Description	Addr.	Data type	Value range	Default	Unit
Laser start position	This parameter defines the switch-on position of the laser in 1/10° increments within the visible range of the laser. The center of the reading field corresponds to the 0° position.	0 … 1	UNSIGNED16	-450 … +450	-450	1/10°
Laser stop position	This parameter defines the switch-off position of the laser in 1/10° increments within the visible range of the laser.	2 … 3	UNSIGNED16	-450 … +450	+450	1/10°

Parameter length

4 byte

Input data

None

Output data

None

10.12.3 Module 62 – Display

PROFINET-IO module identifier

Module ID: 1062

Submodule ID: 1

Description

Set in this module are general parameters and parameters related to operation and the display.

Parameter

Table 10.38: Parameters for module 62

Parameter	Description	Addr.	Data type	Value range	Default	Unit
Language selection	Language selection for the display. A language which was selected via the display is overwritten by this parameter.	0.0 … 0.2	Bit	1: English 2: German 3: Italian 4: French 5: Spanish	1	-
Display illumination	Off after 10 min., or permanently on.	0.3	Bit	0: Off after 10 min. 1: Permanently on	0	-
Display contrast	Contrast setting of the display. The contrast changes under extreme ambient temperature and can be adjusted with this parameter.	0.4 … 0.5	Bit	0: Light 1: Medium 2: Strong	1	-
Password protection	Password protection on/off	0.7	Bit	0: OFF 1: ON	0	-
Password	Password specification. Password is only active if password protection is on.	1 … 2	UNSIGNED16	0000 … 9999	0000	-

Parameter length

3 byte

Input data

None

Output data

None

When resetting the data the input data of this module is not deleted (see chapter 10.8.1 "Module 10 – Activations").

10.12.4 Module 63 – Alignment

PROFINET-IO module identifier

Module ID: 1063

Submodule ID: 1

Description

The module defines input and output data for the alignment mode of the BCL 648i. Alignment mode is used for easily aligning the BCL 648i to the bar code. Using the transmitted decoding quality as a percentage, the optimum alignment can be easily selected. This module should not be used in connection with module 81 (AutoReflAct) as this may cause malfunctions.

Parameter

None

Input data

Table 10.39: Input data for module 63

Input data	Description	Addr.	Data type	Value range	Init value	Unit
Decoding quality	Transmits the current decoding quality of the bar code located in the scanning beam	0	Byte	0 … 100	0	Percentage

Input data length

1 byte

Output data

Table 10.40: Output data for module 63

Output data	Description	Addr.	Data type	Value range	Init value	Unit
Alignment mode	Signal activates and deactivates the alignment mode for optimum alignment of the BCL 648i with the bar code	0.0	Bit	0 -> 1: On 1 -> 0: Off	0	-

Output data length

1 byte

10.12.5 Module 64 – Oscillating mirror

PROFINET-IO module identifier

Module ID: 1064

Submodule ID: 1

Description

Module for supporting the oscillating mirror.

Parameter

Table 10.41: Parameters for module 64

Parameter	Description	Rel. Addr.	Data type	Value range	Default	Unit
Oscillation mode	This parameter defines the mode in which the oscillating mirror operates.	0.0 … 0.1	UNSIGNED8	0: Single oscillation 1: Double oscillation 2: Continuous oscillation 3: Continuous oscillation, oscillating mirror moves to the start position at the end of the reading gate.	2	-
Decoding direction	Setting of oscillating direction in which the bar codes to be read must be decoded.	0.4 … 0.5	BitArea	0: In both directions 1: During forward oscillation 2: During backward oscillation	0	-
Start position	Start position (opening angle) relative to the zero position of the swivel range.	1 … 2	SIGNED16	-200 … +200	200	1/10°
Stop position	Stop position (opening angle) relative to the zero position of the swivel range.	3 … 4	SIGNED16	-200 … +200	-200	1/10°
Oscillation frequency	Common value for forward and backward motion	5	UNSIGNED8	15 … 116	48	°/s

Parameter length

6 byte

Input data

None

Output data

None

10.12.6 Module 65 – Deflection mirror

PROFINET-IO module identifier

Module ID: 1065

Submodule ID: 1

Description

Module for supporting the deflection mirror.

Parameter

Table 10.42: Parameters for module 65

Parameter	Description	Rel. Addr.	Data type	Value range	Default	Unit
Deflection angle	Lateral beam exit in degrees relative to the zero position	0 …1	SIGNED16	-100 … +100	0	1/10°

Parameter length

2 bytes

Input data

None

Output data

None

10.13 Switching inputs/ outputs SWIO 1 … 4

These modules define the mode of operation of the 4 digital switching inputs and outputs (I/Os). They are separated into individual modules for configuring the individual I/Os and a shared module for signaling the status and controlling all I/Os.

10.13.1 Parameters for operating as an output

Start-up delay

With this setting, the output pulse can be delayed by the specified time (in ms).

Switch-on time

Defines the switch-on time period for the switching input. Any activated switch-off function then no longer has any function.

A value of 0 causes the output to be set statically; this means that the selected input function(s) activate the output, and the selected switch-off function(s) deactivate it again.

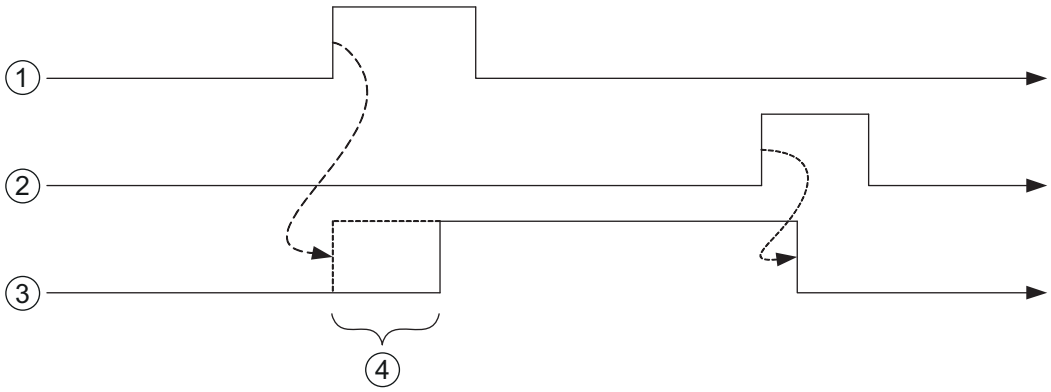

1 Start-up signal
2 Switch-off signal
3 Output
4 Start-up delay

Figure 10.5: Example 1: Start-up delay > 0 and switch-on time = 0

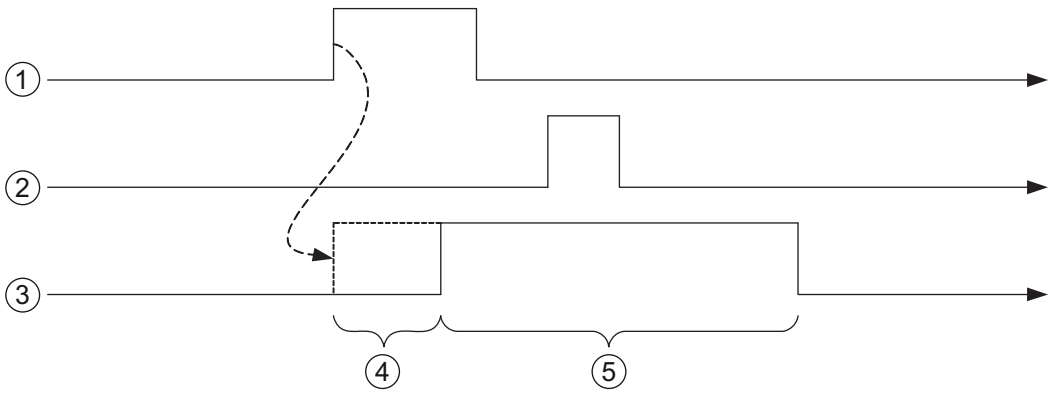

1 Start-up signal
2 Switch-off signal
3 Output
4 Start-up delay
5 Switch-on time

Figure 10.6: Example 2: Start-up delay > 0 and switch-on time > 0

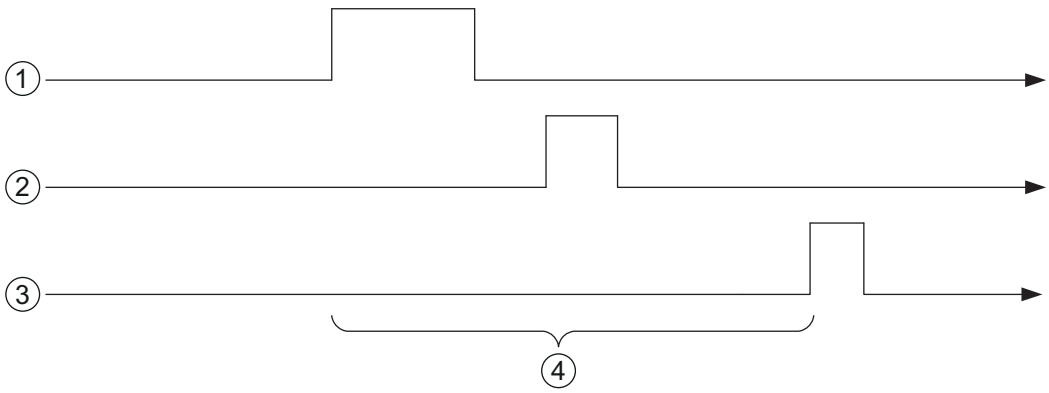

1 Start-up signal
2 Switch-off signal
3 Output
4 Start-up delay

Figure 10.7: Example 3: Start-up delay >0 Switch-off signal prior to lapsing of the start-up delay

If the output is again deactivated via the switch-off signal before the start-up delay lapses, only a brief pulse appears at the output following the start-up delay.

Comparison functionality

If, for example, the switching output is to be activated after four invalid read results, the comparative value is set to 4 and the switch-on function is configured to “invalid read result”.

The comparison mode parameter can be used to define whether the switching output is activated only once in the case that the event counter and comparative value fulfill the “parity” condition, or if it is activated multiple times, on each successive event after the “parity” condition is met.

The event counter can always be reset with the I/O data in the I/O status and control module; furthermore, the reset mode parameter enables automatic resetting upon reaching the comparative value. Automatic resetting upon reaching the comparative value always results in the switching output being switched once independent of the comparison mode parameter.

The standard switch-off function at reading gate start is rather unsuited for this module since it causes the event counter to be reset on each reading gate start. Suitable as switch-off function for this example is the valid read result function; otherwise, all switch-off functions are deactivated.

10.13.2 Parameters for operating as an input

Debounce time

Parameter for setting the software debounce time for the switching input. The definition of a debounce time extends the signal transition time accordingly.

If the value of this parameter = 0, no debouncing takes place; otherwise, the configured value represents the duration in milliseconds for which the input signal must be present and stable.

Start-up delay td_on

If the value of this parameter = 0, no start-up delay occurs for the activation of the input function; otherwise, the configured value represents the time in milliseconds by which the input signal is delayed.

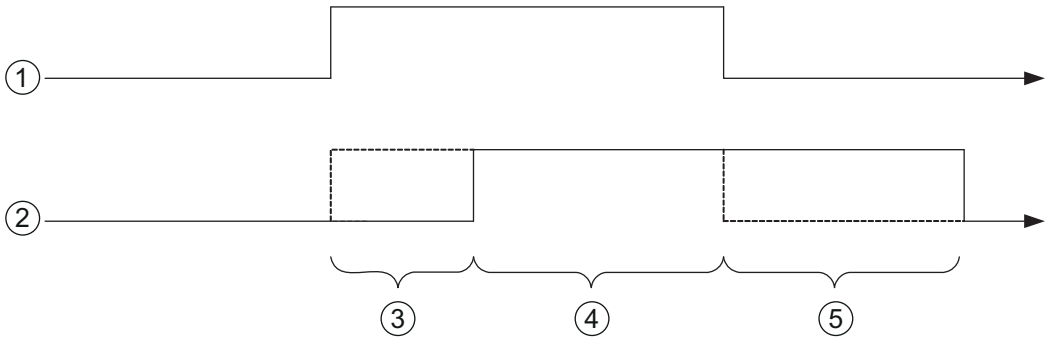

1 Start-up signal
2 Switch-off signal
3 Start-up delay td_on
4 Switch-on time ton
5 Switch-off delay td_off

Figure 10.8: Start-up delay in input mode

Switch-on time ton

This parameter specifies the min. activation duration for the selected input function in ms.

The actual activation duration is calculated from the switch-on time as well as the switch-off delay.

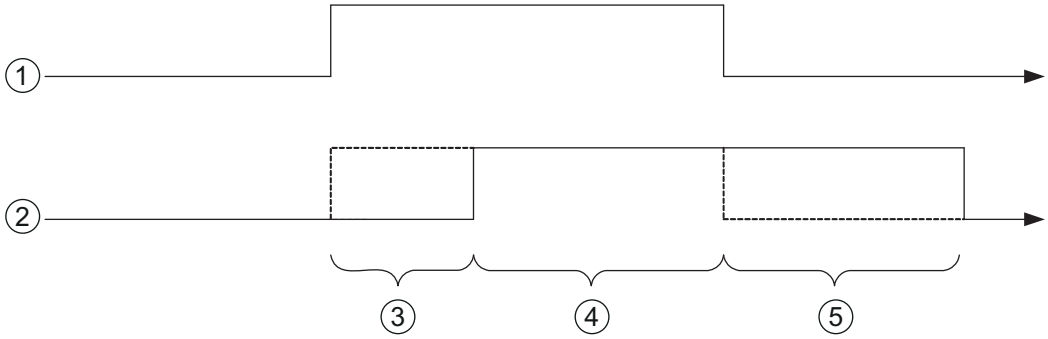

1 Start-up signal
2 Switch-off signal
3 Start-up delay td_on
4 Switch-on time ton
5 Switch-off delay td_off

Figure 10.9: Switch-on time in input mode

Switch-off delay td_off

This parameter specifies the duration of the switch-off delay in ms.

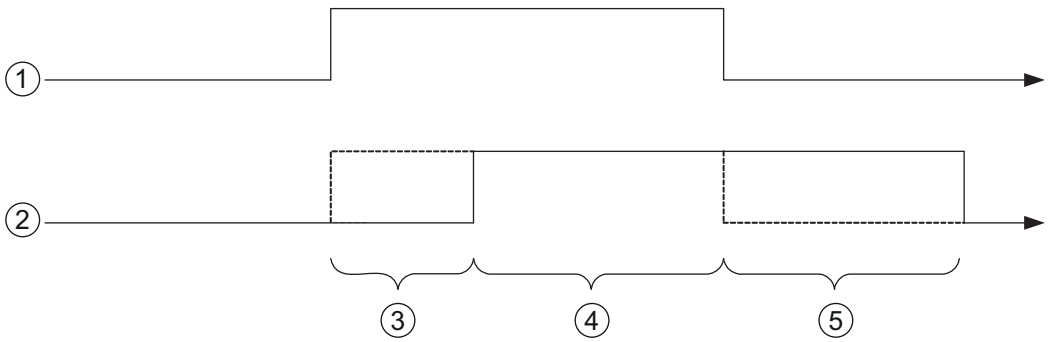

1 Start-up signal
2 Switch-off signal
3 Start-up delay td_on
4 Switch-on time ton
5 Switch-off delay td_off

Figure 10.10: Switch-off delay in input mode

10.13.3 Switch-on and switch-off functions for operation as an output

The following options are available for switch-on and switch-off functions in the “output” operating mode:

Table 10.43: Switch-on/switch-off functions

Name	Value	Comments
No function	0	No functionality
Reading gate start	1	
Reading gate end	2	
Positive reference code comparison 1	3	
Negative reference code comparison 1	4	
Valid read result	5	
Invalid read result	6	
Device ready	7	The device is in a ready state.
Device not ready	8	The device is not yet ready (motor and laser are being activated).
Data transmission active	9	
Data transmission not active	10	
AutoControl good quality	13	
AutoControl bad quality	14	
Reflector detected	15	
Reflector not detected	16	
External event, pos. edge	17	In the PROFINET case, the external event is generated with the aid of module 74 – I/O status and control, see chapter 10.13.9 "Module 74 – SWIO status and control"
External event, neg. edge	18	See above
Device active	19	Decoding is currently being performed.
Device in standby mode	20	Motor and laser inactive.
No device error	21	No error was detected
Device error	22	Device is in an error state.
Positive reference code comparison 2	23	
Negative reference code comparison 2	24	

10.13.4 Input functions for operation as an input

Table 10.44: Input functions

Name	Value	Comments
No function	0	No functionality
Activation of the reading gate	1	
Reading gate deactivation only	2	
Reading gate activation only	3	
Reference bar code teach-in	4	
Start/stop autoconfiguration mode	5	

10.13.5 Module 70 – Switching input/output SWIO1

PROFINET-IO module identifier

Module ID: 1070

Submodule ID: 1

Parameter

Table 10.45: Parameters for module 70 – Input/Output 1

Parameter	Description	Addr.	Data type	Value range	Default	Unit
Function	This parameter defines whether I/O 1 functions as an input or as an output.	0.0	Bit	0: Input 1: Output	0	-
Mode of operation for configuration as an output						
DC bias level	The parameter defines the DC bias level of the switching output and, thus, simultaneously whether the output is low-active (0) or high-active (1).	0.1	Bit	0: LOW (0V) 1: HIGH (+Ub)	0	-
Reserved	Free	0.2 … 0.7				
Start-up delay	With this parameter, the output pulse may be delayed by a set time period.	1	UNSIGNED16	0 … 65535	0	ms
Switch-on time	The parameter defines the switch-on time period for the switching output. If the value is 0, the signal is static.	3	UNSIGNED16	0 … 1300	400	ms
Switch-on function 1	This parameter specifies an event which can set the switching output.	5	UNSIGNED8	see table 10.43	0	-
Switch-on function 2	This parameter specifies an event which can set the switching output. Switch-on function 1 and switch-on function 2 are OR linked.	6	UNSIGNED8	see table 10.43	0	-
Switch-off function 1	This parameter specifies an event which can reset the switching output.	7	UNSIGNED8	see table 10.43	0	-
Switch-off function 2	This parameter specifies an event which can reset the switching output. Switch-off function 1 and switch-off function 2 are OR linked.	8	UNSIGNED8	see table 10.43	0	-
Comparative value (Event Counter)	If the number of activation events of the selected switch-on function reaches this comparative value, the switching output is activated. A deactivation event of the selected switch-off function resets the counter.	9	UNSIGNED16	0..65535	0	-
Compare mode (Event Counter)	Specifies whether the switching output switches only on parity (once) or also in the event of greater or equal to (multiple times) after the comparative value is reached.	11	UNSIGNED8	0: SWOUT switches once 1: SWOUT switches several times	0	

Parameter	Description	Addr.	Data type	Value range	Default	Unit
Reset mode (Event Counter)	Specifies whether the counter (Event Counter) is reset only by the reset bit and the selected switch-off function, or if the counter should be automatically reset after the comparative value is reached.	12	UNSIGNED8	0: Reset bit and switch-off funct. 1: Comparative value reached	0	-
Mode of operation for configuration as an input						
Inversion	The parameter defines the logic of the incident signal. In case of an inversion, an external HIGH level is interpreted internally as a LOW level.	13.1	Bit	0: Normal 1: Inverted	0	-
Reserved	Free	13.2 … 13 .7				
Debounce time	The parameter defines a debounce time which is implemented in software.	14	UNSIGNED16	0 … 1000	5	ms
Start-up delay	The parameter influences the timing during switch-on.	16	UNSIGNED16	0 … 65535	0	ms
Minimum switch-on time	The parameter defines a minimum time period before the signal is reset.	18	UNSIGNED16	0 … 65535	0	ms
Switch-off delay	The parameter defines a time delay for the signal during switch-off.	20	UNSIGNED16	0 … 65535	0	ms
Input function	The parameter specifies the function which is to be activated or deactivated by a change of state in the signal.	22	UNSIGNED8	see table 10.44	1	-

Parameter length

23 byte

Input data

None

Output data

None

Comment

The DC bias level also defines whether the output is low-active (0) or high-active (1).

Switching on an I/O configured as an output means switching to the active state; switching off, on the other hand, results in switching to the inactive or idle state.

10.13.6 Module 71 – Switching input/output SWIO2

PROFINET-IO module identifier

Module ID: 1071

Submodule ID: 1

Parameter

Table 10.46: Parameters for module 71 – Input/Output 2

Parameter	Description	Addr.	Data type	Value range	Default	Unit
Function	This parameter defines whether I/O 2 functions as an input or as an output.	0.0	Bit	0: Input 1: Output	1	-
Mode of operation for configuration as an output						
DC bias level	The parameter defines the DC bias level of the switching output and, thus, simultaneously whether the output is low-active (0) or high-active (1).	0.1	Bit	0: LOW (0V) 1: HIGH (+Ub)	0	-
Reserved	Free	0.2 … 0.7				
Start-up delay	With this parameter, the output pulse may be delayed by a set time period.	1	UNSIGNED16	0 … 65535	0	ms

Parameter	Description	Addr.	Data type	Value range	Default	Unit
Switch-on time	The parameter defines the switch-on time period for the switching output. If the value is 0, the signal is static.	3	UNSIGNED16	0 … 1300	400	ms
Switch-on function 1	This parameter specifies an event which can set the switching output.	5	UNSIGNED8	see table 10.43	5	-
Switch-on function 2	This parameter specifies an event which can set the switching output. Switch-on function 1 and switch-on function 2 are OR linked.	6	UNSIGNED8	see table 10.43	0	-
Switch-off function 1	This parameter specifies an event which can reset the switching output.	7	UNSIGNED8	see table 10.43	0	-
Switch-off function 2	This parameter specifies an event which can reset the switching output. Switch-off function 1 and switch-off function 2 are OR linked.	8	UNSIGNED8	see table 10.43	0	-
Comparative value (Event Counter)	If the number of activation events of the selected switch-on function reaches this comparative value, the switching output is activated. A deactivation event of the selected switch-off function resets the counter.	9	UNSIGNED16	0..65535	0	-
Compare mode (Event Counter)	Specifies whether the switching output switches only on parity (once) or also in the event of greater or equal to (multiple times) after the comparative value is reached.	11	UNSIGNED8	0: SWOUT switches once 1: SWOUT switches several times	0	-
Reset mode (Event Counter)	Specifies whether the counter (Event Counter) is reset only by the reset bit and the selected switch-off function, or if the counter should be automatically reset after the comparative value is reached.	12	UNSIGNED8	0: Reset bit and switch-off funct. 1: Comparative value reached	0	-
Mode of operation for configuration as an input						
Inversion	The parameter defines the logic of the incident signal. In case of an inversion, an external HIGH level is interpreted internally as a LOW level.	13.1	Bit	0: Normal 1: Inverted	0	-
Reserved	Free	13.2 … 13 .7				
Debounce time	The parameter defines a debounce time which is implemented in software.	14	UNSIGNED16	0 … 1000	5	ms
Start-up delay	The parameter influences the timing during switch-on.	16	UNSIGNED16	0 … 65535	0	ms
Minimum switch-on time	The parameter defines a minimum time period before the signal is reset.	18	UNSIGNED16	0 … 65535	0	ms
Switch-off delay	The parameter defines a time delay for the signal during switch-off.	20	UNSIGNED16	0 … 65535	0	ms
Input function	The parameter specifies the function which is to be activated or deactivated by a change of state in the signal.		UNSIGNED8	see table 10.44	0	-

Parameter length

23 byte

Input data

None

Output data

None

Comment

The DC bias level also defines whether the output is low-active (0) or high-active (1).

Switching on an I/O configured as an output means switching to the active state; switching off, on the other hand, results in switching to the inactive or idle state.

ПРОМЭЛЕКТРОНИКА / sales@prom-elec.com

10.13.7 Module 72 – Switching input/output SWIO3

PROFINET-IO module identifier

Module ID: 1072

Submodule ID: 1

Parameter

Table 10.47: Parameters for module 72 – Input/Output 3

Parameter	Description	Addr.	Data type	Value range	Default	Unit
Function	This parameter defines whether I/O 3 functions as an input or as an output.	0.0	Bit	0: Input 1: Output	0	-
Mode of operation for configuration as an output						
DC bias level	The parameter defines the DC bias level of the switching output and, thus, simultaneously whether the output is low-active (0) or high-active (1).	0.1	Bit	0: LOW (0V) 1: HIGH (+Ub)	0	-
Reserved	Free	0.2 … 0.7				
Start-up delay	With this parameter, the output pulse may be delayed by a set time period.	1	UNSIGNED16	0 … 65535	0	ms
Switch-on time	The parameter defines the switch-on time period for the switching output. If the value is 0, the signal is static.	3	UNSIGNED16	0 … 1300	400	ms
Switch-on function 1	This parameter specifies an event which can set the switching output.	5	UNSIGNED8	see table 10.43	0	-
Switch-on function 2	This parameter specifies an event which can set the switching output. Switch-on function 1 and switch-on function 2 are OR linked.	6	UNSIGNED8	see table 10.43	0	-
Switch-off function 1	This parameter specifies an event which can reset the switching output.	7	UNSIGNED8	see table 10.43	0	-
Switch-off function 2	This parameter specifies an event which can reset the switching output. Switch-off function 1 and switch-off function 2 are OR linked.	8	UNSIGNED8	see table 10.43	0	-
Comparative value (Event Counter)	If the number of activation events of the selected switch-on function reaches this comparative value, the switching output is activated. A deactivation event of the selected switch-off function resets the counter.	9	UNSIGNED16	0..65535	0	-
Compare mode (Event Counter)	Specifies whether the switching output switches only on parity (once) or also in the event of greater or equal to (multiple times) after the comparative value is reached.	11	UNSIGNED8	0: SWOUT switches once 1: SWOUT switches several times	0	-
Reset mode (Event Counter)	Specifies whether the counter (Event Counter) is reset only by the reset bit and the selected switch-off function, or if the counter should be automatically reset after the comparative value is reached.	12	UNSIGNED8	0: Reset bit and switch-off funct. 1: Comparative value reached	0	-
Mode of operation for configuration as an input						
Inversion	The parameter defines the logic of the incident signal. In case of an inversion, an external HIGH level is interpreted internally as a LOW level.	13.1	Bit	0: Normal 1: Inverted	0	-
Reserved	Free	13.2 … 13.7				
Debounce time	The parameter defines a debounce time which is implemented in software.	14	UNSIGNED16	0 … 1000	5	ms
Start-up delay	The parameter influences the timing during switch-on.	16	UNSIGNED16	0 … 65535	0	ms

Parameter	Description	Addr.	Data type	Value range	Default	Unit
Minimum switch-on time	The parameter defines a minimum time period before the signal is reset.	18	UNSIGNED16	0 … 65535	0	ms
Switch-off delay	The parameter defines a time delay for the signal during switch-off.	20	UNSIGNED16	0 … 65535	0	ms
Input function	The parameter specifies the function which is to be activated or deactivated by a change of state in the signal.	22	UNSIGNED8	see table 10.44	1	-

Parameter length

23 byte

Input data

None

Output data

None

Comment

The DC bias level also defines whether the output is low-active (0) or high-active (1).

Switching on an I/O configured as an output means switching to the active state; switching off, on the other hand, results in switching to the inactive or idle state.

10.13.8 Module 73 – Switching input/output SWIO4

PROFINET-IO module identifier

Module ID: 1073

Submodule ID: 1

Parameter

Table 10.48: Parameters for module 73 – Input/Output 4

Parameter	Description	Addr.	Data type	Value range	Default	Unit
Function	This parameter defines whether I/O 4 functions as an input or as an output.	0.0	Bit	0: Input 1: Output	1	-
Mode of operation for configuration as an output						
DC bias level	The parameter defines the DC bias level of the switching output and, thus, simultaneously whether the output is low-active (0) or high-active (1).	0.1	Bit	0: LOW (0V) 1: HIGH (+Ub)	0	-
Reserved	Free	0.2 … 0.7				
Start-up delay	With this parameter, the output pulse may be delayed by a set time period.	1	UNSIGNED16	0 … 65535	0	ms
Switch-on time	The parameter defines the switch-on time period for the switching output. If the value is 0, the signal is static.	3	UNSIGNED16	0 … 1300	400	ms
Switch-on function 1	This parameter specifies an event which can set the switching output.	5	UNSIGNED8	see chapter 10.13.3	6	-
Switch-on function 2	This parameter specifies an event which can set the switching output. Switch-on function 1 and switch-on function 2 are OR linked.	6	UNSIGNED8	see chapter 10.13.3	0	-
Switch-off function 1	This parameter specifies an event which can reset the switching output.	7	UNSIGNED8	see chapter 10.13.3	1	-
Switch-off function 2	This parameter specifies an event which can reset the switching output. Switch-off function 1 and switch-off function 2 are OR linked.	8	UNSIGNED8	see chapter 10.13.3	0	-

Parameter	Description	Addr.	Data type	Value range	Default	Unit
Comparative value (Event Counter)	If the number of activation events of the selected switch-on function reaches this comparative value, the switching output is activated. A deactivation event of the selected switch-off function resets the counter.	9	UNSIGNED16	0..65535	0	-
Compare mode (Event Counter)	Specifies whether the switching output switches only on parity (once) or also in the event of greater or equal to (multiple times) after the comparative value is reached.	11	UNSIGNED8	0: SWOUT switches once 1: SWOUT switches several times	0	-
Reset mode (Event Counter)	Specifies whether the counter (Event Counter) is reset only by the reset bit and the selected switch-off function, or if the counter should be automatically reset after the comparative value is reached.	12	UNSIGNED8	0: Reset bit and switch-off funct. 1: Comparative value reached	0	-
Mode of operation for configuration as an input						
Inversion	The parameter defines the logic of the incident signal. In case of an inversion, an external HIGH level is interpreted internally as a LOW level.	13.1	Bit	0: Normal 1: Inverted	0	-
Reserved	Free	13.2 … 13.7				
Debounce time	The parameter defines a debounce time which is implemented in software.	14	UNSIGNED16	0 … 1000	5	ms
Start-up delay	The parameter influences the timing during switch-on.	16	UNSIGNED16	0 … 65535	0	ms
Minimum switch-on time	The parameter defines a minimum time period before the signal is reset.	18	UNSIGNED16	0 … 65535	0	ms
Switch-off delay	The parameter defines a time delay for the signal during switch-off.	20	UNSIGNED16	0 … 65535	0	ms
Input function	The parameter specifies the function which is to be activated or deactivated by a change of state in the signal.	22	UNSIGNED8	see chapter 10.13.3	0	-

Parameter length

23 byte

Input data

None

Output data

None

Comment

The DC bias level also defines whether the output is low-active (0) or high-active (1).

Switching on an I/O configured as an output means switching to the active state; switching off, on the other hand, results in switching to the inactive or idle state.

10.13.9 Module 74 – SWIO status and control

PROFINET-IO module identifier

Module ID: 1074

Submodule ID: 1

Description

Module for handling switching input and switching output signals.

Parameter

None

Input data

Table 10.49: Input data for module 74 Input/output status and control

Parameter	Description	Addr.	Data type	Value range	Init value	Unit
State 1	Signal state of switching input or output 1	0.0	Bit	0.1	0	-
State 2	Signal state of switching input or output 2	0.1	Bit	0.1	0	-
State 3	Signal state of switching input or output 3	0.2	Bit	0.1	0	-
State 4	Signal state of switching input or output 4	0.3	Bit	0.1	0	-
Comparison state switching output 1 (Event Counter)	Indicates whether the event counter has exceeded the set comparative value. The bit is reset to the init. value by resetting the event counter.	1.0	Bit	0: Not exceeded 1: Exceeded	0	-
Switching output 1 Comparison state toggle bit (Event Counter)	If “SWOUT switches several times” was configured as comparison mode, this bit is toggled each time the event counter is exceeded. Indicates whether the event counter has reached the set comparative value.	1.1	Bit	0 -> 1: Event counter exceeded 1 -> 0: Event counter exceeded again	0	-
Comparison state switching output 2 (Event Counter)	Indicates whether the event counter has exceeded the set comparative value. The bit is reset to the init. value by resetting the event counter.	1.2	Bit	0: Not exceeded 1: Exceeded	0	-
Switching output 2 Comparison state toggle bit (Event Counter)	If “SWOUT switches several times” was configured as comparison mode, this bit is toggled each time the event counter is exceeded. Indicates whether the event counter has reached the set comparative value.	1.3	Bit	0 -> 1: Event counter exceeded 1 -> 0: Event counter exceeded again	0	-
Comparison state switching output 3 (Event Counter)	Indicates whether the event counter has exceeded the set comparative value. The bit is reset to the init. value by resetting the event counter.	1.4	Bit	0: Not exceeded 1: Exceeded	0	-
Switching output 3 Comparison state toggle bit (Event Counter)	If “SWOUT switches several times” was configured as comparison mode, this bit is toggled each time the event counter is exceeded. Indicates whether the event counter has reached the set comparative value.	1.5	Bit	0 -> 1: Event counter exceeded 1 -> 0: Event counter exceeded again	0	-
Comparison state switching output 4 (Event Counter)	Indicates whether the event counter has exceeded the set comparative value. The bit is reset to the init. value by resetting the event counter.	1.6	Bit	0: Not exceeded 1: Exceeded	0	-
Switching output 4 Comparison state toggle bit (Event Counter)	If “SWOUT switches several times” was configured as comparison mode, this bit is toggled each time the event counter is exceeded. Indicates whether the event counter has reached the set comparative value.	1.7	Bit	0 -> 1: Event counter exceeded 1 -> 0: Event counter exceeded again	0	-

Input data length:

2 bytes

Output data

Table 10.50: Output data for module 74 Input/output status and control

Output data	Description	Addr.	Data type	Value range	Init value	Unit
Switching output 1	Sets the state of switching output 1	0.0	Bit	0: Switching output 0 1: Switching output 1	0	-
Switching output 2	Sets the state of switching output 2	0.1	Bit	0: Switching output 0 1: Switching output 1	0	-
Switching output 3	Sets the state of switching output 3	0.2	Bit	0: Switching output 0 1: Switching output 1	0	-
Switching output 4	Sets the state of switching output 4	0.3	Bit	0: Switching output 0 1: Switching output 1	0	-
Reset Event Counter Switching output 1	Sets the event counter of the activation function [AF] for switching output 1 back to zero.	0.4	Bit	0 -> 1: Perform reset 1 -> 0: No function	0	-

Output data	Description	Addr.	Data type	Value range	Init value	Unit
Reset Event Counter Switching output 2	Sets the event counter of the activation function [AF] for switching output 2 back to zero.	0.5	Bit	0 -> 1: Perform reset 1 -> 0: No function	0	-
Reset Event Counter Switching output 3	Sets the event counter of the activation function [AF] for switching output 3 back to zero.	0.6	Bit	0 -> 1: Perform reset 1 -> 0: No function	0	-
Reset Event Counter Switching output 4	Sets the event counter of the activation function [AF] for switching output 4 back to zero.	0.7	Bit	0 -> 1: Perform reset 1 -> 0: No function	0	-
	Reserved	1	Byte			

Output data length:

1 byte

10.14 Data output

10.14.1 Module 80 – Sorting

PROFINET-IO module identifier

Module ID: 1080

Submodule ID: 1

Description

Module to support the sorting of the output data.

Parameter

Table 10.51: Parameters for module 80

Parameter	Description	Addr.	Data type	Value range	Default	Unit
Sort criterion 1	Specifies the criterion according to which sorting takes place.	0.0 … 0.6	BitArea	0: No sorting 1: Sorting according to scan number 2: Sorting according to position in the scanning beam 3: Sorting according to the oscillating mirror position 4: Sorting according to the decoding quality 5: Sorting according to the bar code length 6: Sorting according to the code type number 7: Sorting according to the decoding direction 8: Sorting according to the bar code content 9: Sorting according to time 10: Sorting according to scanning duration 11: Sorting according to the code list (in which the enabled bar codes are listed) 12: Sorting according to the identifier list	0	-
Sort direction 1	Specifies the sorting direction.	0.7	Bit	0: In ascending order 1: In descending order	0	-
Sort criterion 2	Specifies the criterion according to which sorting takes place.	1.0 … 1.6	BitArea	See sorting criterion 1	0	-
Sort direction 2	Specifies the sorting direction.	1.7	Bit	See sorting direction 1	0	-
Sort criterion 3	Specifies the criterion according to which sorting takes place.	2.0 … 2.6	BitArea	See sorting criterion 1	0	-
Sort direction 3	Specifies the sorting direction.	2.7	Bit	See sorting direction 1	0	-

Parameter length

3 byte

Input data

None

Output data

None

10.15 Reference code comparison

The following modules can be used to support reference code comparison.

The reference code function compares the currently decoded read results with one or more stored comparison patterns. The function is split into two comparison units which can be configured independently of each other.

10.15.1 Module 81 – Reference code comparator 1

PROFINET-IO module identifier

Module ID: 1081

Submodule ID: 1

Description

The module defines the mode of operation of reference code comparator 1.

Parameter

Table 10.52: Parameters for module 81 – Reference code comparison

Parameter	Description	Addr.	Data type	Value range	Default	Unit
Output function after reference bar code comparison	This parameter specifies the associated output linkage after a reference bar code comparison.	0	UNSIGNED8	0: No function 1: Comparison function 1 2: Comparison function 2 3: Comparison function 1 AND 2 4: Comparison function 1 OR 2	1	-
Linking logic for reference code output signal	This parameter specifies the linking logic for the reference code output signal.	1	UNSIGNED8	0: Length and type and ASCII 1: Length and (type or ASCII) 2: (Length or type) and ASCII 3: Length or type or ASCII	0	-
Output for reference code comparison	This parameter specifies whether a bar code length comparison should be carried out.	2	UNSIGNED8	0: Length ignored 1: Comparison o.k. if length not identical 2: Comparison o.k. if length identical.	2	-
Bar code type comparison	This parameter specifies whether a bar code type comparison should be carried out.	3	UNSIGNED8	0: Type ignored 1: Comparison o.k. if types not identical 2: Comparison o.k. if types identical.	2	-
Reference code ASCII comparison	This parameter specifies how the ASCII comparison should be carried out.	4	UNSIGNED8	0: No comparison 1: Bar code not identical to RC 2: Bar code identical to RC 3: Bar code greater than RC 4: Bar code greater than or equal to RC 5: Bar code less than RC 6: Bar code less than or equal to RC 7: RC1 less than or equal to bar code less than or equal to RC2 8: Bar code less than RC1 or bar code greater than RC2	2	-

Parameter	Description	Ad-dr.	Data type	Value range	Default	Unit
Reference code comparison mode	This parameter determines how and which reference bar codes (RC) are to be used for the bar code comparison.	5	UNSIGNED8	0: Only the first RC is used for the comparison. 1: Only the second RC is used for the comparison. 2: RC 1 and 2 are used for the comparison. Both conditions for RC 1 and 2 must be satisfied for a positive comparison. 3: RC 1 and 2 are used for the comparison. One of the two conditions for reference bar codes 1 and 2 must be satisfied.	0	-
Bar code comparison mode	This parameter specifies which decoded bar codes are to be used for the reference bar code comparison.	6	UNSIGNED8	0: Only the first bar code is used for the comparison. 1: Only the second bar code is used for the comparison. 2: All bar codes are used for the comparison. All comparisons must be successful. 3: All bar codes are used for the comparison. One comparison must be successful.	3	-
Reference code completeness comparison	If this parameter is set, the basic condition for a positive reference code comparison is that all mandatory bar codes that are to be read within a reading gate were actually read. If this condition is not satisfied, no positive reference code comparison is achieved.	7.0	Bit	0: Completeness comparison switched off. 1: Completeness comparison switched on.	0	-

Parameter length

8 byte

Input data

None

Output data

None

10.15.2 Module 82 – Reference code comparator 2

PROFINET-IO module identifier

Module ID: 1082

Submodule ID: 1

Description

The module defines the mode of operation of reference code comparator 2.

Parameter

Table 10.53: Parameters for module 82 – Reference code comparison

Parameter	Description	Addr.	Data type	Value range	Default	Unit
Output function after reference bar code comparison	This parameter specifies the associated output linkage after a reference bar code comparison.	0	UNSIGNED8	0: No function 1: Comparison function 1 2: Comparison function 2 3: Comparison function 1 AND 2 4: Comparison function 1 OR 2	1	-
Linking logic for reference code output signal	This parameter specifies the linking logic for the reference code output signal.	1	UNSIGNED8	0: Length and type and ASCII 1: Length and (type or ASCII) 2: (Length or type) and ASCII 3: Length or type or ASCII	0	-
Output for reference code comparison	This parameter specifies whether a bar code length comparison should be carried out.	2	UNSIGNED8	0: Length ignored 1: Comparison o.k. if length not identical 2: Comparison o.k. if length identical.	2	-

Parameter	Description	Addr.	Data type	Value range	Default	Unit
Bar code type comparison	This parameter specifies whether a bar code type comparison should be carried out.	3	UNSIGNED8	0: Type ignored 1: Comparison o.k. if types not identical 2: Comparison o.k. if types identical.	2	-
Reference code ASCII comparison	This parameter specifies how the ASCII comparison should be carried out.	4	UNSIGNED8	0: No comparison 1: Bar code not identical to RC 2: Bar code identical to RC 3: Bar code greater than RC 4: Bar code greater than or equal to RC 5: Bar code less than RC 6: Bar code less than or equal to RC 7: RC1 less than or equal to bar code less than or equal to RC2 8: Bar code less than RC1 or bar code greater than RC2	2	-
Reference code comparison mode	This parameter determines how and which reference bar codes (RC) are to be used for the bar code comparison.	5	UNSIGNED8	0: Only the first RC is used for the comparison. 1: Only the second RC is used for the comparison. 2: RC 1 and 2 are used for the comparison. Both conditions for RC 1 and 2 must be satisfied for a positive comparison. 3: RC 1 and 2 are used for the comparison. One of the two conditions for reference bar codes 1 and 2 must be satisfied.	0	-
Bar code comparison mode	This parameter specifies which decoded bar codes are to be used for the reference bar code comparison.	6	UNSIGNED8	0: Only the first bar code is used for the comparison. 1: Only the second bar code is used for the comparison. 2: All bar codes are used for the comparison. All comparisons must be successful. 3: All bar codes are used for the comparison. One comparison must be successful.	3	-
Reference code completeness comparison	If this parameter is set, the basic condition for a positive reference code comparison is that all mandatory bar codes that are to be read within a reading gate were actually read. If this condition is not satisfied, no positive reference code comparison is achieved.	7.0	Bit	0: Completeness comparison switched off. 1: Completeness comparison switched on.	0	-

Parameter length

8 byte

Input data

None

Output data

None

10.15.3 Module 83 – Reference code comparison pattern 1

PROFINET-IO module identifier

Module ID: 1083

Submodule ID: 1

Description

This module can be used to define the 1st comparison pattern.

Parameter

Table 10.54: Parameters for module 83 – Reference code comparison pattern

Parameter	Description	Addr.	Data type	Value range	Default	Unit
Code type comparison pattern 1	Specifies the type of the reference bar code.	0	UNSIGNED8	0: No code 1: 2/5 Interleaved 2: Code39 3: Code32 6: UPC, UPCE 7: EAN8, EAN13 8: Code128 10: EAN Addendum 11: Codabar 12: Code93 13: GS1 DataBar Omnidirectional 14: GS1 DataBar Limited 15: GS1 DataBar Omnidirectional Expanded	0	-
Comparison pattern 1	Parameter string describing the content of the reference bar code. Note: You can also use the two placeholder characters that are stored in the “Wildcard character” and “Don't care character” parameters. If the string is empty, no comparison takes place. If the most recently stored character is the wildcard character, the comparison is only carried out up to the character before this wildcard character. In this way it is possible to switch off a comparison according to bar code length.	1	STRING 30 characters null terminated	1 … 30 bytes of ASCII characters	\00	-

Parameter length

31 byte

Input data

None

Output data

None

The defined comparison pattern affects both reference code comparators (module 81 – reference code comparator 1 and module 82 – reference code comparator 2).

ASCII characters that cannot be displayed (<0x20h) must not be used in the comparison pattern.

10.15.4 Module 84 – Reference code comparison pattern 2

PROFINET-IO module identifier

Module ID: 1084

Submodule ID: 1

Description

This module can be used to define the 2nd comparison pattern.

Parameter

Table 10.55: Parameters for module 84 – Reference code comparison pattern

Parameter	Description	Addr.	Data type	Value range	Default	Unit
Code type comparison pattern 2	Specifies the type of the reference bar code.	0	UNSIGNED8	0: No code 1: 2/5 Interleaved 2: Code39 3: Code32 6: UPC, UPCE 7: EAN8, EAN13 8: Code128 10: EAN Addendum 11: Codabar 12: Code93 13: GS1 DataBar Omnidirectional 14: GS1 DataBar Limited 15: GS1 DataBar Expanded	0	-
Comparison pattern 2	Parameter string describing the content of the reference bar code. Note: You can also use the two placeholder characters that are stored in the “Wildcard character” and “Don't care character” parameters. If the string is empty, no comparison takes place. If the most recently stored character is the wildcard character, the comparison is only carried out up to the character before this wildcard character. In this way it is possible to switch off a comparison according to bar code length.	1	STRING 30 characters null terminated	1 … 30 bytes of ASCII characters	\00	-

Parameter length

31 byte

Input data

None

Output data

None

The defined comparison pattern affects both reference code comparators (module 81 – reference code comparator 1 and module 82 – reference code comparator 2).

ASCII characters that cannot be displayed (<0x20h) must not be used in the comparison pattern.

10.16 Special Functions

10.16.1 Module 90 – Status and control

PROFINET-IO module identifier

Module ID: 1090

Submodule ID: 1

This module supplies various device status information to the PROFINET-IO master. Various functions of the device can be controlled via the master's output data.

Parameter

None

Input data

Table 10.56: Input data for module 90 – Status and control

Input data	Description	Addr.	Data type	Value range	Init value	Unit
Reserved	Free	0.0	Bit		0	-
AutoRefl state	Signal state of the AutoRefl module	0.1	Bit	0: Reflector is recognized 1: Reflector is hidden	1	-
Auto Control result	Indicates whether the result of the AutoControl function was a good or bad reading.	0.2	Bit	0: Quality good 1: Quality bad	0	-
Reserved	Free	0.3	Bit		0	-
RefCode comparison state 1	The signal indicates whether the decoded bar code corresponds to the reference code with regard to the comparison criteria as defined in the comparison function 1. If it matches, the value 1 is output.	0.4 … 0.5	Bit	0: Not equal 1: Equal 2: Unknown	2	-
RefCode comparison state 2	The signal indicates whether the decoded bar code corresponds to the reference code with regard to the comparison criteria as defined in the comparison function 2. If it matches, the value 1 is output.	0.6 … 0.7	Bit	0: Not equal 1: Equal 2: Unknown	2	-

Input data length:

1 byte

Output data

None

10.16.2 Module 91 – AutoReflAct (automatic reflector activation)

PROFINET-IO module identifier

Module ID: 1091

Submodule ID: 1

Description

The module defines the mode of operation of the laser scanner for controlling the reading gate.

The AutoReflAct function uses the scanning beam to simulate a photoelectric sensor and thus permits an activation without additional sensory mechanism. This is achieved by directing the scanner with reduced scanning beam towards a reflector mounted behind the conveyor path. As long as the scanner is targeted at the reflector, the reading gate remains closed. If, however, the reflector is blocked by an object such as a container with a bar code label, the scanner activates the read procedure, and the label on the container is read. When the path from the scanner to the reflector has cleared, the read procedure has completed and the scanning beam is reduced and again directed onto the reflector. The reading gate is closed.

Parameter

Table 10.57: Parameters for module 91 – AutoreflAct

Parameter	Description	Addr.	Data type	Value range	Default	Unit
Mode	This parameter activates the function of the laser scanner. If “Autom. reading gate control” is set as the parameter value, the BCL activates the reading gate automatically if the reflector is obscured.	0	UNSIGNED8	0: Normal - AutoreflAct switched off. 1: Auto - AutoreflAct activated. Autom. reading gate control. 2: Manual - AutoreflAct activated. No reading gate control, signaling only.	0	-
Debouncing	The parameter defines the debounce time in scans for the reflector detection. With a motor speed of 1000, 1 scan corresponds to a debounce time of 1 ms.	1	UNSIGNED8	1 … 16	5	-

Parameter length

2 bytes

Input data
None

Output data
None

10.16.3 Module 92 – AutoControl

PROFINET-IO module identifier
Module ID: 1092
Submodule ID: 1

Description
The module defines the mode of operation of the function AutoControl. The function monitors the quality of the decoded bar codes and compares these with a limit value. If the limit is reached, a status is set.

Parameter

Table 10.58: Parameters for module 92 – AutoControl

Parameter	Description	Addr.	Data type	Value range	Default	Unit
AutoControl enable	This parameter can be used to activate or deactivate the AutoControl function.	0	UNSIGNED8	0: deactivated 1: activated	0	-
Limit for reading quality	The parameter defines a threshold for the reading quality.	1	UNSIGNED8	0 … 100	50	%
Sensitivity	With this parameter the sensitivity towards changes in the reading ability can be specified. The higher the value, the less influence a change of reading ability has.	2	UNSIGNED8	0 … 255	0	-

Parameter length
3 byte

Input data

Table 10.59: Input data for module 92 – AutoControl

Input data	Description	Addr.	Data type	Value range	Init value	Unit
Scan quality	Represents the current average value of the scan quality (at the time of the last reading gate).	0	UNSIGNED8	0 … 100	0	-

Input data
1 byte

Output data
None

By means of the AutoControl function, it is possible to detect bar codes of decreasing quality and thus take appropriate measures before the label is no longer legible. With activated AutoControl function, note that the "Processing end at end of label" parameter in the CRT module should be set to allow for a better assessment of the bar code quality (see chapter 10.7.3 "Module 7 – Code reconstruction technology").

10.16.4 Module 100 – multiScan master

PROFINET-IO module identifier
Module ID: 1100
Submodule ID: 1

Description
The module defines the mode of operation of the function multiScan Master.

The multiScan master performs the control function in the multiScan network. It starts the decoding, accepts the decoding results of the assigned slave (node 1.. node 32) and links these to the final decoding result. This result is then passed on to the host via the host interface. The complete multiScan unit behaves as a logical bar code reader relative to the control.

Parameter

Table 10.60: Parameters for module 100 – multiScan master

Parameter	Description	Addr.	Data type	Value range	Default	Unit
Reserved		0.7	Bit	TBD	0	-
Reserved		0.0 to 1.7	Bit	TBD	0	-
Slave UDP port #	Port number for the UDP communication with the slave participants	2	Unsigned16	0-0xffff	10003	-
multiScan slave node 1	IP address node 1	4	IP_ADDRESS		0.0.0.0	-
multiScan slave node 2	IP address node 2	19	IP_ADDRESS		0.0.0.0	-
multiScan slave node 3	IP address node 3	34	IP_ADDRESS		0.0.0.0	-
multiScan slave node 4	IP address node 4	49	IP_ADDRESS		0.0.0.0	-
multiScan slave node 5	IP address node 5	64	IP_ADDRESS		0.0.0.0	-
multiScan slave node 6	IP address node 6	79	IP_ADDRESS		0.0.0.0	-
multiScan slave node 7	IP address node 7	94	IP_ADDRESS		0.0.0.0	-
multiScan slave node 8	IP address node 8	109	IP_ADDRESS		0.0.0.0	-
multiScan slave node 9	IP address node 9	124	IP_ADDRESS		0.0.0.0	-
multiScan slave node 10	IP address node 10	139	IP_ADDRESS		0.0.0.0	-

Parameter length

154 bytes

Input data

Table 10.61: Input data for module 100

Input data	Description	Addr.	Data type	Value range	Default	Unit
MoE network status[1)]	General status of the MoE network	0	Unsigned8	0-0xff	0	-
Slave status[2)]	Status of slave participants 1-8	1	Unsigned8	Bit-coded per slave	0	-
	Status of slave participants 9-16	2	Unsigned8	Bit-coded per slave	0	-
	Status of slave participants 17-23	3	Unsigned8	Bit-coded per slave	0	-
	Status of slave participants 24-32	4	Unsigned8	Bit-coded per slave	0	-

1) Signals the status of the complete network. States: 0x00 initial status, not ready; 0x01 network ready; additional states TBD. Network state “network ready” is only signaled if all configured slaves are ready, see “Slave status”.

2) For each slave participant, one bit signals the network status of the respective slave. The value 0 means “not ready”; value 1 represents the “ready” status.

Output data

None

Output data length

0 byte

The presence of this module activates the multiScan master mode and sets all necessary master communication parameters. In this case, the master IP address corresponds to the Profinet-IO device, i.e., its own IP address.

Data format of the IP_ADDRESS:

The IP address is entered as a string in the usual IP-V4 notation, e.g., 192.168.0.1. In addition, it is permissible to enter a 0 for the default setting.

IP_ADDRESS = 0 means that the node is deactivated, i.e., the entry is ignored. The slave enable parameter is automatically set according to the IP address setting during the PNIO configuration phase.

10.16.5 Module 101 – multiScan slave addresses 1

PROFINET-IO module identifier

Module ID: 1101

Submodule ID: 1

Description

Additional module for the configuration of the slave addresses for slaves 11-20.

Parameter

Table 10.62: Parameters for module 101 – multiScan slave addresses 1

Parameter	Description	Addr.	Data type	Value range	Default	Unit
multiScan slave node 11	IP address node 11	0	IP_ADDRESS		0.0.0.0	-
multiScan slave node 12	IP address node 12	15	IP_ADDRESS		0.0.0.0	-
multiScan slave node 13	IP address node 13	30	IP_ADDRESS		0.0.0.0	-
multiScan slave node 14	IP address node 14	45	IP_ADDRESS		0.0.0.0	-
multiScan slave node 15	IP address node 15	60	IP_ADDRESS		0.0.0.0	-
multiScan slave node 16	IP address node 16	75	IP_ADDRESS		0.0.0.0	-
multiScan slave node 17	IP address node 17	90	IP_ADDRESS		0.0.0.0	-
multiScan slave node 18	IP address node 18	105	IP_ADDRESS		0.0.0.0	-
multiScan slave node 19	IP address node 19	120	IP_ADDRESS		0.0.0.0	-
multiScan slave node 20	IP address node 20	135	IP_ADDRESS		0.0.0.0	-

Parameter length

150 bytes

Input data

None

Output data

None

Data format of the IP_ADDRESS:

The IP address is entered as a string in the usual IP-V4 notation, e.g., 192.168.0.1. In addition, it is permissible to enter a 0 for the default setting.

IP_ADDRESS = 0 means that the node is deactivated, i.e., the entry is ignored. The slave enable parameter is automatically set according to the IP address setting during the PNIO configuration phase.

10.16.6 Module 102 – multiScan slave addresses 2

PROFINET-IO module identifier
Module ID: 1102
Submodule ID: 1

Description
Additional module for the configuration of the slave addresses for slaves 21-32.

Parameter
Parameter analogous to module 101.

Parameter length
180 bytes

Input data
None

Output data
None

10.17 Example configuration: Indirect activation via the PLC

10.17.1 Task

- Reading of a 10-digit code in 2/5 Interleaved format
- Activation of the device via the PLC

Code sample
Code 2/5 Interleaved 10 digits with check digit

2234234459

10.17.2 Procedure

Hardware, connections

The following connections must have been established:
- Voltage supply (PWR)
- PROFINET-IO (HOST/BUS) In

Required modules

Include the following modules in your project:
- Module 1010 – Activations
- Module 1023 – Decoding result 12 bytes

Parameter settings
No parameters need to be set separately. The standard parameter set provides all required functions.

Flow diagrams

Table 10.63: Successful reading

PLC		Photoelectric sensor	BCL	Description
Time	Photoelectric sensor from 0 -> 1			The photoelectric sensor is interrupted.
	M 1010 bit 0.0 0 -> 1			Activation bit 0.0 is set to 1. This activates the reading gate.
		M 1023 bit 0.1 from 0 -> 1 M 1023 bit 0.2 = 0 M 1023 byte 1 = data length M 1023 byte 2 to 12: result		The bar codes that have been read are processed and transmitted by module 1023: Reading concluded bit 0.1 = 1 and bar code not decoded bit 0.2 = 0. The data length is entered in byte 1, in this case 9 decimal. The decoding result is transmitted in the following 11 bytes.
	Internal processing			Internal data processing.
		M 1010 bit 0.0 1 -> 0		Activation bit 0.0 is reset to 0.

Table 10.64: Unsuccessful reading

PLC		Photoelectric sensor	BCL	Description
Time	Photoelectric sensor from 0 -> 1			The photoelectric sensor is interrupted.
	M 1010 bit 0.0 0 -> 1			Activation bit 0.0 is reset to 1.
	Photoelectric sensor from 1 -> 0			The reading gate elapses without read result.
	M 1010 bit 0.0 0 -> 1			Activation bit 0.0 is reset to 0.
		M 1023 bit 0.1 from 0 -> 1 M 1023 bit 0.2 from 0 -> 1 M 1023 byte 1 = data length M 1023 byte 2 = result		The module decoding state signals: Reading concluded bit 0.1 = 1 and bar code not decoded bit 0.2 = 1. The data length is entered in byte 1. The result hex 3F (? = no read) is transmitted.
	Internal processing			Internal processing of the data and signaling of the non-reading.

10.18 Sample configuration: Direct activation via the switching input

10.18.1 Task

- Module 1010 – Activations
- Module 1023 – Decoding result 12 bytes

Code sample

Code 2/5 Interleaved 12 digits with check digit

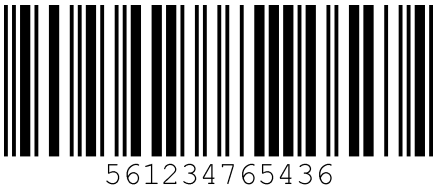

10.18.2 Procedure

Hardware, connections

The following connections must have been established:

- Voltage supply (PWR)
- PROFINET-IO (HOST/BUS) In
- Photoelectric sensor at SWIO1

Required modules

Include the following modules in your project:

- Module 1023 – Decoding result 12 bytes

Parameter settings of the device parameters

Table 10.65: Device parameters for example configuration 2

Byte	Description	Init value	Change value to:
1	Code type 1	0	01: 2/5 Interleaved
4	Digits 3	0	12

Flow diagrams

Table 10.66: Successful reading

PLC		Photoelectric sensor	BCL	Description
Time		Photoelectric sensor from 0 -> 1		The photoelectric sensor is interrupted. The signal of the switching output of the photoelectric sensor is present at the switching input of the device and activates the scanner.
		M 1023 bit 0.1 from 0 -> 1 M 1023 bit 0.2 = 0 M 1023 byte 1 = data length M 1023 byte 2 to 12 = result		The bar codes that have been read are processed and transmitted by module 1023: Reading concluded bit 0.1 = 1 and bar code not decoded bit 0.2 = 0. The data length is entered in byte 1, in this case 11 decimal. The decoding result is transmitted in the following 11 bytes.
	Internal processing			Internal data processing.
		Photoelectric sensor from 1 -> 0		The beam of the photoelectric sensor is cleared and sets the switching input of the device to 0. This deactivates the scanner.

Table 10.67: Unsuccessful reading

PLC		Photoelectric sensor	BCL	Description
Time		Photoelectric sensor from 0 -> 1		The photoelectric sensor is interrupted. The signal of the switching output of the photoelectric sensor is present at the switching input of the device and activates the scanner.
		Photoelectric sensor from 1 -> 0		The beam of the photoelectric sensor is cleared before a read result is present. The photoelectric sensor sets the switching input of the device to 0 and deactivates the scanner.
		M 1023 bit 0.1 from 0 -> 1 M 1023 bit 0.2 from 0 -> 1 M 1023 byte 1 = 1 M 1023 byte 2 = result		The module decoding state signals: Reading concluded bit 0.1 = 1 and bar code not decoded bit 0.2 = 1. The data length is entered in byte 1. The result hex 3F (? = no read) is transmitted.
	Internal processing			Internal data processing.

11 Online commands

Online commands can be used to send commands directly to the device for control and configuration.
For this purpose, the device must be connected to a host- or service computer via the interface. The commands described can be sent either via the host or the service interface.

Online commands

With the commands, you can:

- control/decode.
- read/write/copy parameters.
- carry out an automatic configuration.
- teach-in/set reference codes.
- call up error messages.
- call up statistical device information.
- carry out a software reset in order to reinitialize the device.

Syntax

Online commands consist of one or two ASCII characters followed by command parameters. No separation characters may be entered between the command and the command parameter(s). Both small and capitalized letters can be used.
Example:

Command CA:	autoConfig function
Parameter +:	Activation
Transmitted is:	CA+

Most online commands are acknowledged by the device and any requested data returned. For commands that are not acknowledged, command execution can be observed or monitored directly on the device.

11.1 General online commands

Software version number

Command	V
Description	Requests device version information
Parameter	No
Acknowledgment	BCL 648i SM 102 V 1.3.8 2014-12-15 The first line contains the device type, followed by the device version number and version date. (The data which is actually displayed may vary from the values given here.)

This command returns the major release number of the software packet. This major release number also appears on the display during start-up.

This command can be used to check whether the connected host or service computer is properly connected and configured. If you do not receive an acknowledgment, please check interface connections, protocol and service switches.

Software reset

Command	H
Description	Carries out a software reset. The device is restarted and reinitialized, leaving it in the same state as when the supply voltage is switched on
Parameter	No
Acknowledgment	S (start signal)

Code recognition

Command	CC
Description	Detects an unknown bar code and outputs number of digits, code type, and code information to the interface, without storing the bar code in the parameter memory.
Parameter	No
Acknowledgment	xx yy zzzzzz xx: Number of digits of the read code yy: Code type of the read code 01 2/5 Interleaved 02 Code 39 03 Code 32 06 UPC (A, E) 07 EAN 08 Code 128, EAN 128 10 EAN Addendum 11 Codabar 12 Code 93 13 GS 1 Databar Omnidirectional 14 GS 1 Databar Limited 15 GS 1 Databar Expanded zzzzzz Contents of the decoded label. A appears if the label was not correctly read

autoConfig

Command	CA
Description	Activates or deactivates the autoConfig function. Certain label reading parameters are programmed automatically in the setup by the labels which the device reads while the autoConfig function is active.
Parameter	+ Activates autoConfig / Rejects the last code read - Deactivates autoConfig and stores the decoded data in the current parameter set

Command	CA	
Acknowledgment	CSx	
	x	Status
	0	Valid CA command
	1	Invalid command
	2	autoConfig could not be activated
	3	autoConfig could not be deactivated
	4	Result could not be deleted
Description	xx yy zzzzzz	
	xx	Number of digits of the read code
	yy	Code type of the read code
	01	2/5 Interleaved
	02	Code 39
	03	Code 32
	06	UPC (A, E)
	07	EAN
	08	Code 128, EAN 128
	10	EAN Addendum
	11	Codabar
	12	Code 93
	13	GS 1 Databar Omnidirectional
	14	GS 1 Databar Limited
	15	GS 1 Databar Expanded
	zzzzzz	Contents of the decoded label. A appears if the label was not correctly read

Alignment mode

Command	JP
Description	This command simplifies mounting and alignment of the device. After activating the function with **JP+**, the device continuously supplies status information to the serial interfaces. With this online command, the scanner is set to terminate the decoding after 100 successfully decoded labels and output the status information. Subsequently, the read process is reactivated automatically. In addition to the output of the status information, the laser beam is used to display the reading quality. Depending on how many read results could be extracted, the duration of the laser's off time increases. If the reading quality is high, the laser beam flashes in brief, regular intervals. The worse the decoder decodes, the longer the pauses become during which the laser is switched off. The flashing intervals become more and more irregular because the laser may, in total, be active for longer to extract more labels. The duration of the pauses has been stepped in such a way that they can be distinguished by the eye.
Parameter	+ Starts the adjustment mode. - Ends the adjustment mode.
Acknowledgment	yyy_zzzzzz yyy Read quality in %. A high process availability is ensured at read qualities > 75 %. zzzzzz Bar code information.

Manual definition of the reference code

Command	RS
Description	This command can be used to define a new reference code in the device by means of direct input via the serial interface. The data is saved in the parameter set according to your input under reference code 1 through 2 and stored in the working buffer for direct further processing.
Parameter	RSyvxxzzzzzzzz y, v, x and z are placeholders (variables) for the actual input. y Defined reference code no. 1 (code 1) 2 (code 2) v Storage location for reference code: 0 RAM+EEPROM, 3 RAM only xx Defined code type (see command CA) z Defined code information (1 … 63 characters)

Command	RS
Acknowledgment	RSx x Status 0 Valid Rx command 1 Invalid command 2 Insufficient memory for reference code 3 Reference code has not been saved 4 Reference code invalid
Example	Input = RS130678654331 (Code 1 (1), RAM only (3), UPC (06), code information)

Reference code teach-in

Command	RT
Description	This command enables a reference code to be defined quickly by reading an example label.
Parameter	RTy y Function 1 Defines reference code 1 2 Defines reference code 2 + Activates the definition of reference code 1 up to the value of Parameter no_of_labels - Ends the teach event
Acknowledgment	The device first responds with the command RS and corresponding status (see command RS). After a bar code has been read, it sends the result in the following format: RCyvxxzzzzz y, v, x and z are placeholders (variables) for the actual input. y Defined reference code no. 1 (code 1) 2 (code 2) v Storage location for reference code 0 RAM+EEPROM, 3 RAM only xx Defined code type (see command CA) z Defined code information (1 … 63 characters)

With this function, only code types are recognized that are identified using the autoConfig function or which were set in the set-up.

↳ After each reading via an RTy command, explicitly switch off the function again since failure to do so will interfere with other commands as well as prevent execution of a new RTx command.

Reading a reference code

Command	RR
Description	The command reads out the reference code defined in the device. If no parameters are specified, all defined codes are output.
Parameter	<reference code number> 1 … 2 value range of reference code 1 to 2
Acknowledgment	If no reference codes are defined, the device responds with the RS command and corresponding status (see command RS). For valid codes, the output corresponds to the following format: RCyvxxzzzzzz y, v, x and z are placeholders (variables) for the actual input. y Defined reference code no. 1 (code 1) 2 (code 2) v Storage location for reference code 0 RAM+EEPROM, 3 RAM only xx Defined code type (see command CA) z Defined code information (1 … 63 characters)

11.2 Online commands for system control

Activating sensor input

Command	+
Description	The command activates decoding. This command is used to activate the reading gate. It remains active until it is deactivated by one of the following criteria: • Deactivation by a manual command • Deactivation by a switching input • Deactivation upon reaching the specified read quality (equal scans) • Deactivation by timeout • Deactivation upon reaching a preset number of scans without information.
Parameter	No
Acknowledgment	None

Deactivating sensor input

Command	-
Description	The command deactivates decoding. This command can be used to deactivate the reading gate. Following deactivation, the read result is output. Because the reading gate was manually deactivated and, thus, no GoodRead criterion was met, a NoRead is output.
Parameter	No
Acknowledgment	None

System boot-up

Command	SON
Description	System boot-up: reactivates the device from standby mode back to operating mode. The polygon wheel motor is started, the device works as usual.
Parameter	No
Acknowledgment	S (start signal)

System standby

Command	SOS
Description	System standby: puts the device in standby mode. The device cannot be triggered, and the polygon wheel motor is stopped.
Parameter	No
Acknowledgment	None

11.3 Online commands for configuration of switching inputs/outputs

Activate switching output

Command	OA
Description	The switching outputs 1 - 4 can be activated with this command. The respective port must have been configured as a switching output. The logic state is output, i.e., an inverted logic is taken into account (e.g., inverted logic and a state of High corresponds to a voltage of 0 V at the switching output).
Parameter	OA<a> <a> Selected switching output [1..4], unit [dimensionless]
Acknowledgment	None

Query the state of the switching outputs

Command	OA
Description	This command may be used to query the states of the switching inputs and outputs that are configured as a switching output and that have been set via commands. The logic state is output, i.e., an inverted logic is taken into account (e.g., inverted logic and a state of High corresponds to a voltage of 0 V at the switching output).
Parameter	OA?

Command	OA
Acknowledgment	OA S1=<a>;S2=<a>[;S3=<a>][;S4=<a>] <a> State of the switching outputs 0 Low 1 High I Configuration as switching input P Passive configuration

Set the state of the switching outputs

Command	OA
Description	This command is used to set the states of the switching inputs/outputs that are configured as a switching output. The logic state is specified, i.e., an inverted logic is taken into account (e.g., inverted logic and a state of High corresponds to a voltage of 0 V at the switching output). The values of the switching inputs/outputs that are not configured as switching outputs are ignored. You may also use only a selection of the existing switching inputs/outputs as long as these are listed in ascending order.
Parameter	OA [S1=<a>][;S2=<a>][;S3=<a>][;S4=<a>] <a> State of the switching output 0 Low 1 High
Acknowledgment	OA=<aa> <aa> Status acknowledgment, unit [dimensionless] 00 ok 01 Syntax error 02 Parameter error 03 Other error

Deactivate switching output

Command	OD
Description	The switching outputs 1 - 4 can be deactivated with this command. The respective port must have been configured as a switching output. The logic state is output, i.e., an inverted logic is taken into account (e.g., inverted logic and a state of High corresponds to a voltage of 0 V at the switching output).
Parameter	OD<a> <a> Selected switching output [1..4], unit [dimensionless]
Acknowledgment	None

Query the configuration of the switching inputs/outputs

Command	OF
Description	This command may be used to query the configuration of the switching inputs/ outputs 1 to 4.
Parameter	OF?
Acknowledgment	OF S1=<a>;S2=<a>[;S3=<a>][;S4=<a>] <a> Function of the switching input / output, unit [dimensionless] I Switching input 0 Switching output P Passive

Configuring the switching inputs/outputs

Command	OF
Description	This command may be used to configure the function of the switching inputs/ outputs 1 to 4. You may also use only a selection of the existing switching inputs/outputs as long as these are listed in ascending order.
Parameter	OF [S1=<a>][;S2=<a>][;S3=<a>][;S4=<a>] <a> Function of the switching input / output, unit [dimensionless] I Switching input 0 Switching output P Passive
Acknowledgment	OF=<bb> <bb> Status acknowledgment 00 ok 01 Syntax error 02 Parameter error 03 Other error

11.4 Online commands for the parameter set operations

Copying parameter set

Command	PC
Description	This command can only be used to copy parameter sets in their entirety. This can be used to replicate the three parameter sets default, permanent and operating parameters on the basis of one another. In addition, this command also be used to restore the factory settings.

Command	PC
Parameter	PC<Source type><Target type> <Source type> Parameter data set that is to be copied, unit [dimensionless] 0 Parameter data set in permanent memory 2 Default or factory parameter set 3 Operating parameter data set in volatile memory <Target type> Parameter set into which the data is to be copied, unit [dimensionless] 0 Parameter data set in permanent memory 3 Operating parameter data set in volatile memory Permissible combinations here include: 03 Copying the data set from the permanent memory to the operating parameter data set 30 Copying the operating parameter data set to the permanent parameter set memory 20 Copying the default parameters to the permanent memory and to the main memory
Acknowledgment	PS=<aa> <aa> Status acknowledgment, unit [dimensionless] 00 ok 01 Syntax error 02 Impermissible command length 03 Reserved 04 Reserved 05 Reserved 06 Impermissible combination, source type - target type

Requesting parameter data set from device

Command	PR
Description	The parameters of the device are grouped together in a parameter set and permanently stored in memory. There is one parameter set in permanent memory and one operating parameter set in volatile memory; in addition, there is a default parameter set (factory parameter set) for initialization. This command can be used to edit the first two parameter sets (in permanent and volatile memory). A check sum can be used for reliable parameter transfer.

Command	PR	
Parameter	PR<BCC type><PS type><Address><Data length>[<BCC>]	
	<BCC type>	Check-digit function during transmission, unit [dimensionless]
	0	Not used
	3	BCC mode 3
	<PS type>	Memory from which the values are to be read, unit [dimensionless]
	0	Parameter values stored in the flash memory
	1	Reserved
	2	Default values
	3	Operating values in RAM
	<Address>	Relative address of the data within the data set
	aaaa	Four-digit, unit [dimensionless]
	<Data length>	Length of the parameter data to be transferred
	bbbb	Four-digit, unit [length in bytes]
	<BCC>	Check sum calculated as specified under BCC type

Command	PR
Acknowledgment positive	PT<BCC type><PS type><Status><Start> <Parameter value - address><Parameter value - address+1>… [;<Address><Parameter value - address>][<BCC>] <BCC type> Check-digit function during transmission, unit [dimensionless] 0 Not used 3 BCC mode 3 <PS type> Memory from which the values are to be read, unit [dimensionless] 0 Parameter values stored in the flash memory 2 Default values 3 Operating values in RAM <Status> Mode of parameter processing, unit [dimensionless] 0 No further parameters 1 Additional parameters follow <Start> Relative address of the data within the data set aaaa Four-digit, unit [dimensionless] <P.value A.> Parameter value of the parameter stored at this address; the parameter set data 'bb' is converted from HEX format to a 2-byte ASCII-format for transfer. <BCC> Check sum calculated as specified under BCC type
Acknowledgment negative	PS=<aa> Parameter reply: <aa> Status acknowledgment, unit [dimensionless] 01 Syntax error 02 Impermissible command length 03 Impermissible value for checksum type 04 Invalid check sum received 05 Impermissible number of data requested 06 Requested data does not (any longer) fit in the transmission buffer 07 Impermissible address value 08 Read access after end of data set 09 Impermissible QPF data set type

Determining parameter set difference to default parameters

Command	PD
Description	This command outputs the difference between the default parameter set and the operating parameter set or the difference between the default parameter set and the permanent parameter set. Comment: The reply supplied by this command can e.g. be directly used for programming a device with factory settings, whereby this device receives the same configuration as the device on which the PD-sequence was executed.
Parameter	PD<P.set1><P.set2> <P.set1> Parameter data set that is to be copied, unit [dimensionless] 0 Parameter data set in permanent memory 2 Default or factory parameter set <P.set2> Parameter set into which the data is to be copied, unit [dimensionless] 0 Parameter data set in permanent memory 3 Operating parameter data set in volatile memory Permissible combinations here include: 20 Output of the parameter differences between the default and the permanently saved parameter set 23 Output of the parameter differences between the default parameter set and the operating parameter set saved in volatile memory 03 Output of the parameter differences between the permanent parameter set and the operating parameter set saved in volatile memory

Command	PD
Acknowledgment positive	PT<BCC><PS type><Status><Addr.><P.value addr.><P.valueAddr.+1>… [;<Addr.><P.value addr.>] <BCC> 0 No check digits 3 BCC mode 3 <PS type> 0 Parameter values stored in the flash memory 3 Operating values stored in RAM <Status> 0 No further parameters 1 Additional parameters follow <Addr.> Relative address of the data within the data set aaaa Four-digit, unit [dimensionless] <P.value> Parameter value of the -bb- parameter stored at this address. The parameter set data is converted from HEX format to a 2-byte-ASCII format for transfer.
Acknowledgment negative	PS=<aa> <aa> Status acknowledgment, unit [dimensionless] 0 No difference 1 Syntax error 2 Impermissible command length 6 Impermissible combination, parameter set 1 and parameter set 2 8 Invalid parameter set

Writing parameter set

Command	PT
Description	The parameters of the device are grouped together in a parameter set and permanently stored in memory. There is one parameter set in permanent memory and one operating parameter set in volatile memory; in addition, there is a default parameter set (factory parameter set) for initialization. This command can be used to edit the first two parameter sets (in permanent and volatile memory). A check sum can be used for reliable parameter transfer.

Command	PT
Parameter	PT<BCC type><PS type><Status><Addr.><P.value addr.> <P.value addr+1>…[;<Addr.><P.value addr.>][<BCC>] <BCC type> Check-digit function during transmission, unit [dimensionless] 0 No check digits 3 BCC mode 3 <PS type> Memory from which the values are to be read, unit [dimensionless] 0 Parameter values stored in the flash memory 3 Operating values stored in RAM <Status> Mode of parameter processing, no function here, unit [dimensionless] 0 No reset after parameter change, no further parameters 1 No reset after parameter change, additional parameters follow 2 With reset after parameter change, no further parameters 6 Set parameters to factory setting, no further parameters 7 Set parameters to factory settings, lock all code types; the code-type setting must follow in the command! <Addr.> Relative address of the data within the data set aaaa Four-digit, unit [dimensionless] <P.value> Parameter value of the -bb- parameter stored at this address. The parameter set data is converted from HEX format to a 2-byte-ASCII format for transfer. <BCC> Check sum calculated as specified under BCC type.

Command	PT
Acknowledgment	PS=<aa> Parameter reply: <aa> Status acknowledgment, unit [dimensionless] 01 Syntax error 02 Impermissible command length 03 Impermissible value for checksum type 04 Invalid check sum received 05 Impermissible data length 06 Invalid data (parameter limits violated) 07 Invalid start address 08 Invalid parameter set 09 Invalid parameter type

12 Care, maintenance and disposal

Usually, the bar code reader does not require any maintenance by the operator.

12.1 Cleaning

↳ In the event of dust build-up, clean the device with a soft cloth; use a cleaning agent (commercially available glass cleaner) if necessary.

NOTICE
Do not use aggressive cleaning agents such as thinner or acetone to clean the device.

12.2 Servicing

12.3 Disposing

↳ For disposal observe the applicable national regulations regarding electronic components.

13 Diagnostics and troubleshooting

For the PROFINET-IO, there are two different options for diagnosis.

Event-related diagnostics

PROFINET-IO transmits events within an automation process as alarms that must be acknowledged by the application process.

The following events are possible:

- Process alarms: Events that originate from the process and are reported to the control.
- Diagnostic alarms: Events that indicate the malfunctioning of an IO device.
- Maintenance alarms: Transmission of information to avoid the failure of a device through preventative maintenance work.
- Manufacturer-specific diagnostics

To identify the alarms uniquely, they are always reported via a slot/subslot. The user can prioritize diagnostic and process alarms differently.

State-related diagnostics

In addition, all alarms are entered into the diagnostics buffer. If required, this buffer can be read by a superior instance via acyclic read services.

A further option to report malfunctioning or status changes in a field device to a plant control is to enter low-priority diagnostic or status messages into the diagnostic buffer only instead of actively reporting them to the superior control.

This option can also be used for preventative maintenance or for low-priority warnings, for example.

The device uses both the event-related diagnostics for high-prioritized events/errors as well as the state-related diagnostics for preventative maintenance and the signaling of low-prioritized events or warnings.

The following alarms and diagnostics messages are supported:

Table 13.1: alarm and diagnostics messages

Diagnostics	Description	BCL 600i category	API/ Slot/ Subslot	Type	Coming/ going	Comment
Parameter error	Error in the configuration of a module.	Error	0/n[a)] /0	Diagnostics alarm[b)]	Coming only	
Configuration error	Error in the configuration of a module.	Error	0/n/0	Diagnostics alarm	Coming only	
Output Update Ignore Warning	The received output data could not be processed.	Warning	0/n/0	Diagnostics message	-	Output data buffer overflow
Temperature warning	The device temperature exceeds the threshold.	-	0/0/0	Process alarm	Coming/ going	Device-related
Laser	The laser operating hour counter has exceeded the threshold.	Status	0/0/0	Precautionary maintenance	-	Device-related/precautionary maintenance
Device error	A manufacturer-specific critical device error has occurred.[c)]	Error	0/0/0	Diagnostics alarm Manufacturer-specific	Coming only	A continued process operation of the device is impossible. This is also indicated by the activation of the PWR LED.
Fatal Error	A fatal error has occurred. This has caused a software reset.	Fatal Error[d)]	0/0/0	Status message	-	Device-related

a) n = module number

b) Only diagnostics or process alarms actually trigger the transmission of an alarm. All other types (preventative maintenance and status messages) only lead to an entry into the diagnostics buffer and are thus part of the state-based diagnostics.

c) Collective diagnostic messages for critical device failures.

d) In the case of a fatal error, the device carries out a software reset. After the warm start, the ErrorManager signals the error to the PROFINET application and enters it as status message into the diagnostics buffer.

error category

The error category is relevant for prioritizing the alarm or the diagnostics message but is not transmitted alongside.

Table 13.2: error categories

error category	Alarm type	PWR LED
STATUS/INFO	Status message	Off
WARNING	Status message	Flashes
ERROR	Diagnostics alarm	On
FATAL ERROR	Diagnostics alarm	ON[a)]

a) The device carries out a software reset.

13.1 General causes of errors

Table 13.3: General causes of errors

Faults	Possible error causes	Measures
Status LED PWR		
Off	• No supply voltage connected to the device • Hardware error	• Check supply voltage • Send device to customer service
Red, flashing	• Warning	• Query diagnostic data and carry out the resulting measures
Red, continuous light	• Error: no function possible	• Internal device error, send in device
Orange, continuous light	• Device in service mode	• Reset service mode with webConfig tool or display
Status LED NET		
Off	• No supply voltage connected to the device • Device not yet recognized by the PROFI-NET-IO • Hardware error	• Check supply voltage • Send device to customer service • Send device to customer service
Red, flashing	• Communication error: Parameterization or configuration failed, IO error: No data exchange	• Check interface • Can be corrected by resetting
Red, continuous light	• Communication error on the PROFINET-IO: No communication to IO controller established (no data exchange)	• Check interface • Cannot be corrected by resetting • Send device to customer service

13.2 Interface errors

Table 13.4: Interface error

Faults	Possible error causes	Measures
No communication via USB service interface	• Incorrect interconnection cable • Connected device is not recognized	• Check interconnection cable • Install USB driver
No communication via PROFINET-IO Status LED NET, continuous red light	• Incorrect wiring • Different protocol settings • Protocol not released • Wrong termination • Incorrect device name set • Incorrect configuration	• Check wiring • Check protocol settings • Activate TCP/ IP or UDP • Activate TCP/ IP or UDP • Check device name • Check configuration of the device in the configuration tool

Faults	Possible error causes	Measures
Sporadic errors at the PROFINET-IO	• Incorrect wiring	• Check wiring • In particular, check wire shielding • Check the cable used
	• Effects due to EMC	• Check shielding (shield covering in place up to the clamping point) • Check grounding concept and connection to functional earth (FE) • Avoid EMC coupling caused by power cables laid parallel to device lines
	• Overall network expansion exceeded	• Check max. network expansion as a function of the max. cable lengths

14 Service and support

24-hour on-call service at:
+49 (0) 7021 573-0

Service hotline:
+49 (0) 7021 573-123
Monday to Friday 8.00 a.m. to 5.00 p.m. (UTC+1)

E-mail:
service.identify@leuze.de

Return address for repairs:
Service center
Leuze electronic GmbH + Co. KG
In der Braike 1
D-73277 Owen / Germany

14.1 What to do should servicing be required?

Please use this chapter as a master copy should servicing be required!

Enter the contact information and fax the form together with your service order to the fax number given below.

Customer data (please complete)

Device type:	
Serial number:	
Firmware:	
Display messages:	
LED states:	
Error description:	
Company:	
Contact person/department:	
Phone (direct):	
Fax:	
Street/No:	
ZIP code/City:	
Country:	

Leuze Service fax number:
+49 7021 573 - 199

15 Technical data

15.1 General specifications

15.1.1 Line scanner

Table 15.1: Optics

Light source	Laser diode
Wavelength	405 nm (blue light)
Beam exit	Front
Scanning rate	800 / 1000 scans/s
Beam deflection	By means of rotating polygon wheel
Useful opening angle	Max. 60°
Optics models / resolution	Medium Density (M): 0.25 … 0.5 mm Low Density (F): 0.3 … 0.5 mm
Reading distance	see chapter 15.4 "Reading field curves / optical data"
Laser class	2 acc. to EN 60825-1, CDRH (U.S. 21 CFR 1040.10)

Table 15.2: Bar code

Code types	2/5 Interleaved, Code 39, Code 128, EAN 128, EAN / UPC, Codabar, Code 93, GS1 DataBar Omnidirectional
Bar code contrast (PCS)	³ 60 %
External light tolerance	2000 lx (on the bar code)
Number of bar codes per scan	6

Table 15.3: Interface

Interface type	2x PROFINET-IO on 2x M12 (D)
Protocols	PROFINET-IO RT communication TCP / IP (client / server) / UDP
baud rate	10/100 MBaud

Table 15.4: Electrical equipment

Service interface	USB 1.1 compatible, A-coded
Switching input/Switching output	4 switching inputs/outputs, freely programmable functions - Switching input: 10 … 30 V DC depending on supply voltage, I max. = 8 mA - Switching output: 10 … 30VDC depending on supply voltage, I max. = 60mA (short-circuit proof) Switching inputs/outputs protected against polarity reversal!
Supply voltage	10 … 30 V DC (Class II, Safety Class III)
Power consumption	Max. 10 W

Table 15.5: Operating and display elements

Display	Monochromatic graphical display, 128 x 64 pixel, with background lighting
Keyboard	4 buttons
LEDs	2 LEDs for power (PWR) and bus state (BUS), two-colored (red/green)

Table 15.6: Mechanics

Degree of protection	IP 65 (with screwed-on M12 plugs or mounted caps)
Weight	1.1 kg
Dimensions (HxWxD)	63 x 123.5 x 106.5 mm
Housing	Diecast aluminum

Table 15.7: Environmental data

Operating temperature range	0 C … +40 °C
Storage temperature range	-20 °C … +70 °C
Air humidity	max. 90 % rel. humidity, non-condensing
Vibration	IEC 60068-2-6, Test Fc
Shock	IEC 60068-2-27, Test Ea
Continuous shock	IEC 60068-2-29, test Eb
Electromagnetic compatibility	EN 55022; IEC 61000-6-2 (contains IEC 61000-4-2, -3, -4, -5 and -6) [a)]

a) This is a Class A product. In a domestic environment this product may cause radio interference, in which case the operator may be required to take adequate measures.

15.1.2 Oscillating-mirror scanner

Specifications are the same as for line scanner with the following differences:

Table 15.8: Optics

Beam exit	Lateral zero position at an angle of 90°
Beam deflection	Via rotating polygon wheel (horizontal) and stepping motor with mirror (vertical)
Oscillation frequency	0 … 10 Hz (adjustable, max. frequency is dependent on set swivel angle)
Max. swivel angle	±20° (adjustable)
Reading field height	see chapter 15.4 "Reading field curves / optical data"

Table 15.9: Electrical equipment

Power consumption	Max. 14 W

Table 15.10: Mechanics

Weight	1.5 kg
Dimensions (HxWxD)	84 x 173 x 147 mm

15.2 Dimensioned drawings

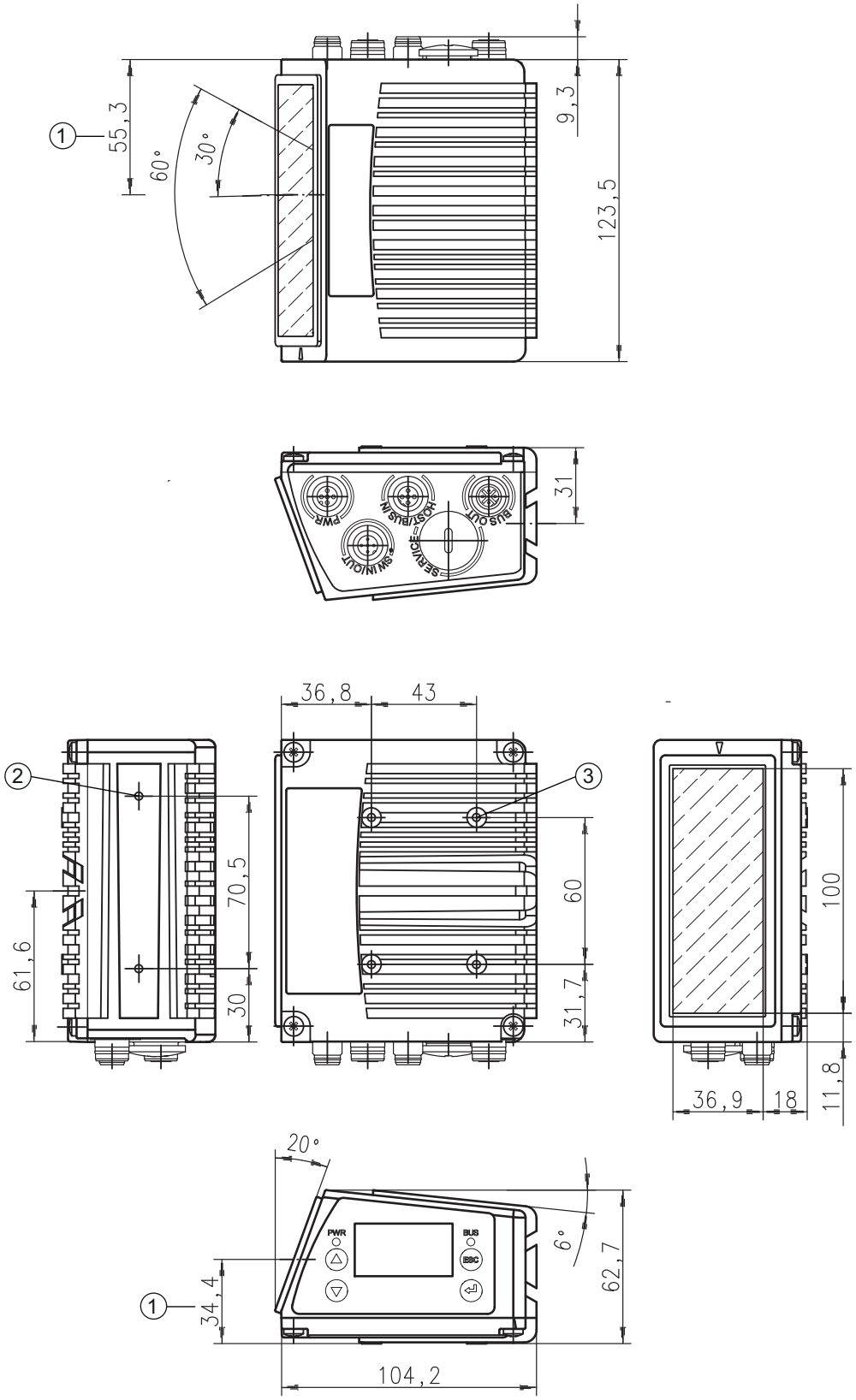

1 Optical axis
2 M4, 7 mm deep
3 M4, 6 mm deep

Figure 15.1: Dimensioned drawing - line scanner

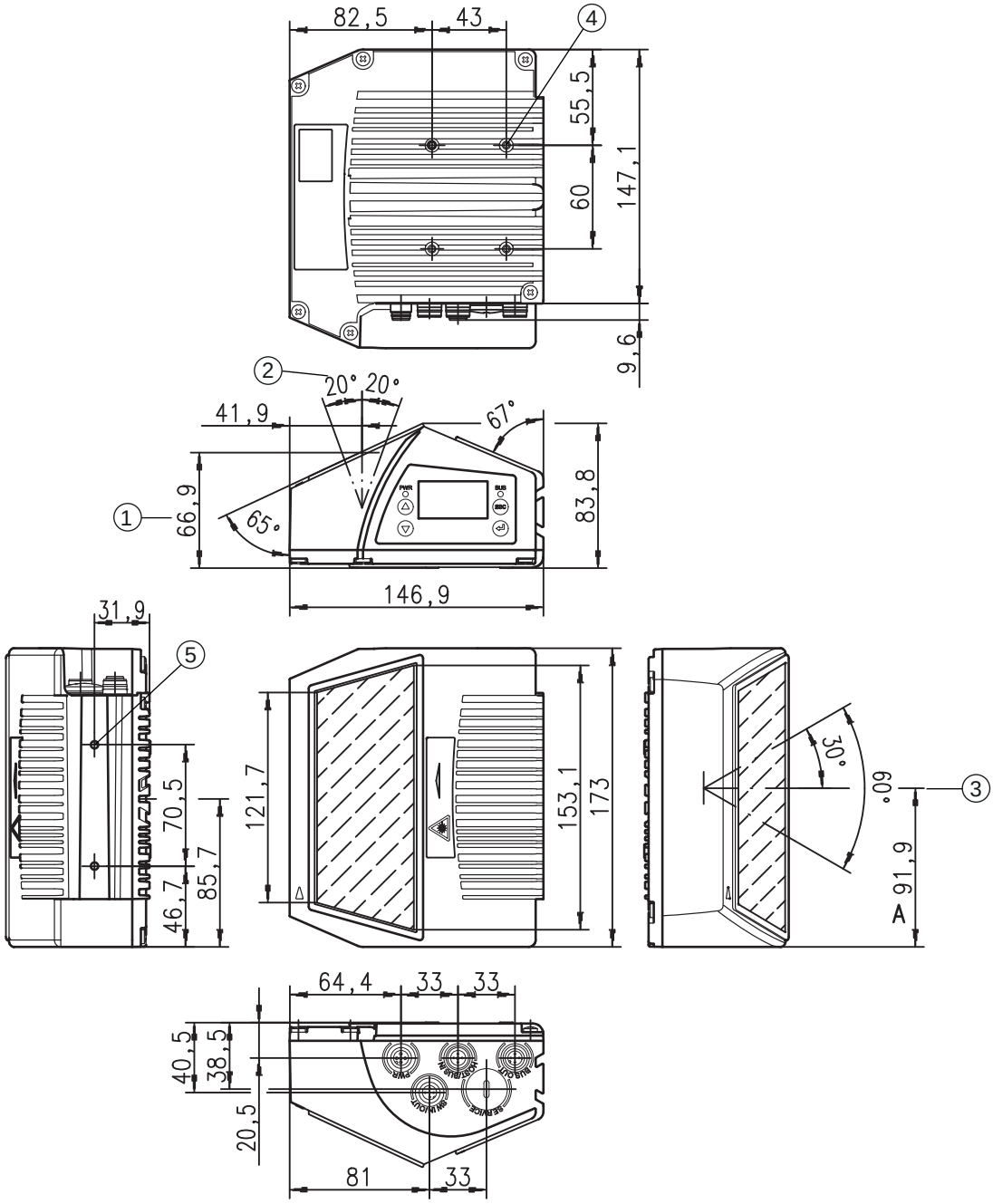

1 Optical axis
2 Optical swivel range
3 Opening angle
4 M4, 7 mm deep
5 M4, 6 mm deep

Figure 15.2: Dimensioned drawing - oscillating-mirror scanner

15.3 Dimensioned drawings: Accessories

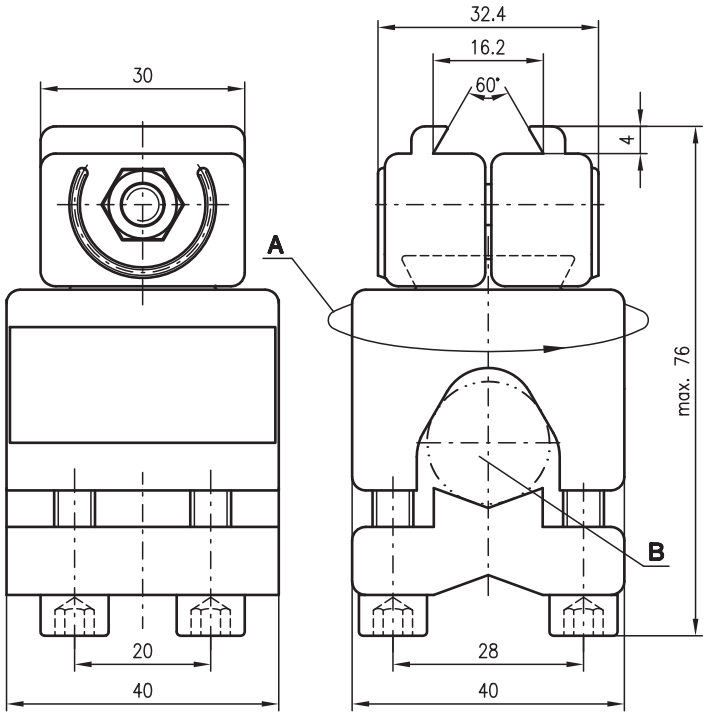

A Holder, turnable 360°
B Rods, Æ 16 … 20 mm

Figure 15.3: BT 56 mounting device

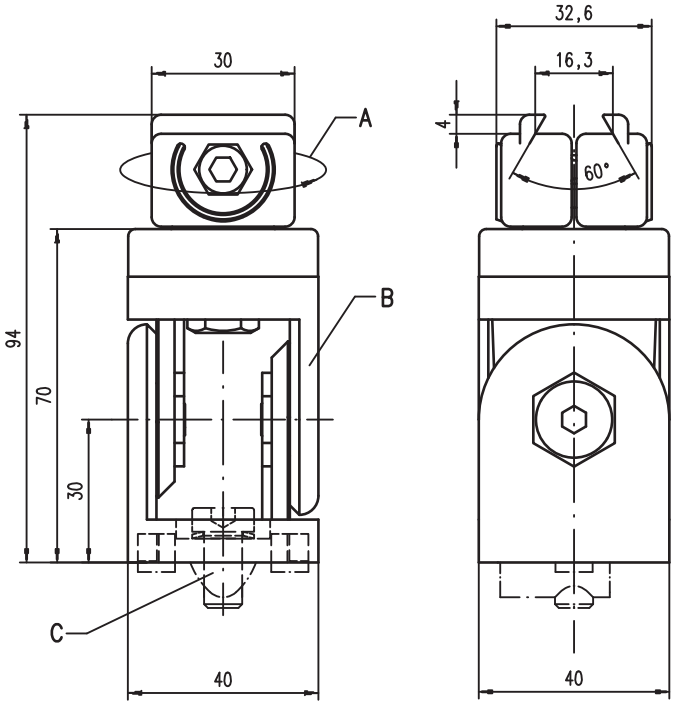

A Holder, turnable 360°
B ITEM joint, adjustable ± 90°
C M8x16 screwable cylinder, M8 serrated washer, M8 sliding block, connectors for ITEM profile (2x)

Figure 15.4: BT 59 mounting device

15.4 Reading field curves / optical data

Bar code characteristics

Please note that the size of the bar code module influences the maximum reading distance and the width of the reading field. Therefore, when selecting a mounting location and/or the bar code label, take into account the different reading characteristics of the scanner with various bar code modules.

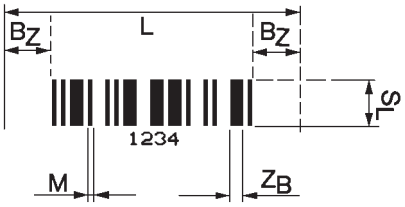

M	Module: The narrowest line or space of a bar code in mm
Z_B	Wide character: Wide bars and gaps are a multiple (ratio) of the module. Module x Ratio = Z_B (Normal Ratio 1 : 2.5)
B_Z	Quiet zone: The quiet zone should be at least 10 times the module, but not less than 2.5 mm.
L	Code length: The length of the bar code in mm including the start and stop characters. The quiet zone is included depending on the code definition.
S_L	Bar length: height of the elements in mm

Figure 15.5: The most important characteristics of a bar code

The range in which the bar code can be read by the device (the so-called reading field) depends on the quality of the printed bar code and its dimensions.
Therefore, above all, the module of a bar code is decisive for the size of the reading field.

A rule of thumb: The smaller the module of the bar code is, the smaller the maximum reading distance and reading field width will be

15.5 Reading field curves

Please notice that the real reading fields are also influenced by factors such as labeling material, printing quality, reading angle, printing contrast etc., and may thus deviate from the reading fields specified here.

The zero position of the reading distance always refers to the front edge of the housing of the beam exit and is shown for the two housing types of the device (see figure 15.6).

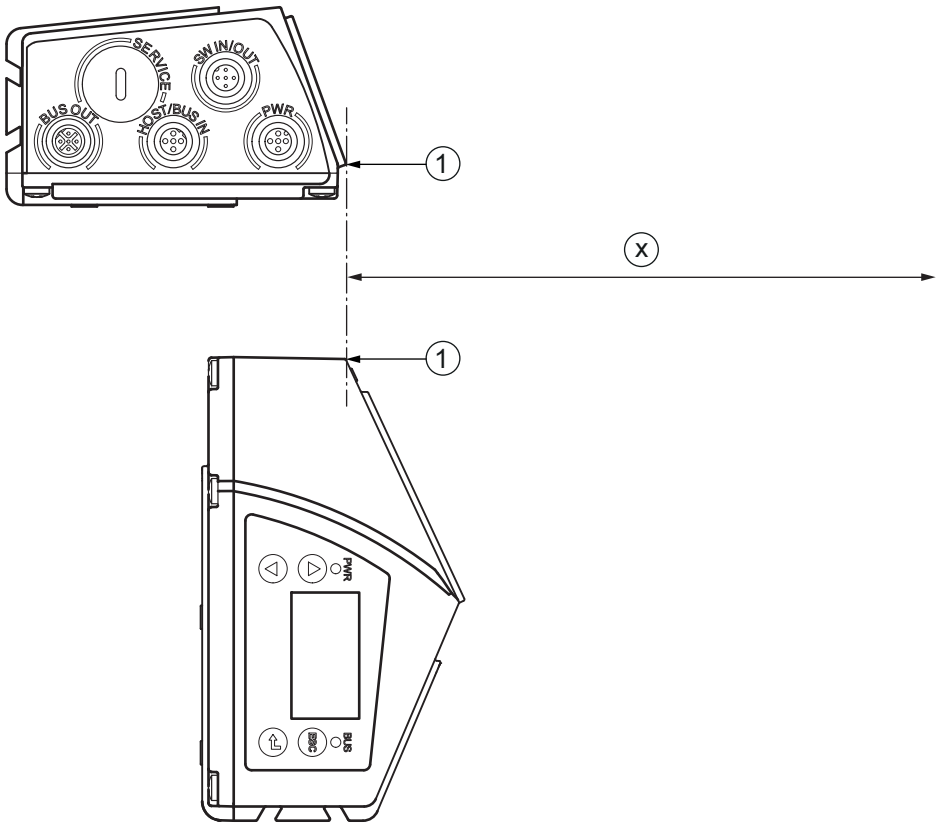

1 Zero position
x Distance acc. to reading field curves

Figure 15.6: Zero position of the reading distance

Reading conditions for the reading field curves

Table 15.11: Reading conditions

Bar code type	2/5 Interleaved
Ratio	1:2.5
ANSI specification	class A
Reading rate	> 75%

15.5.1 Medium Density (M) - optics

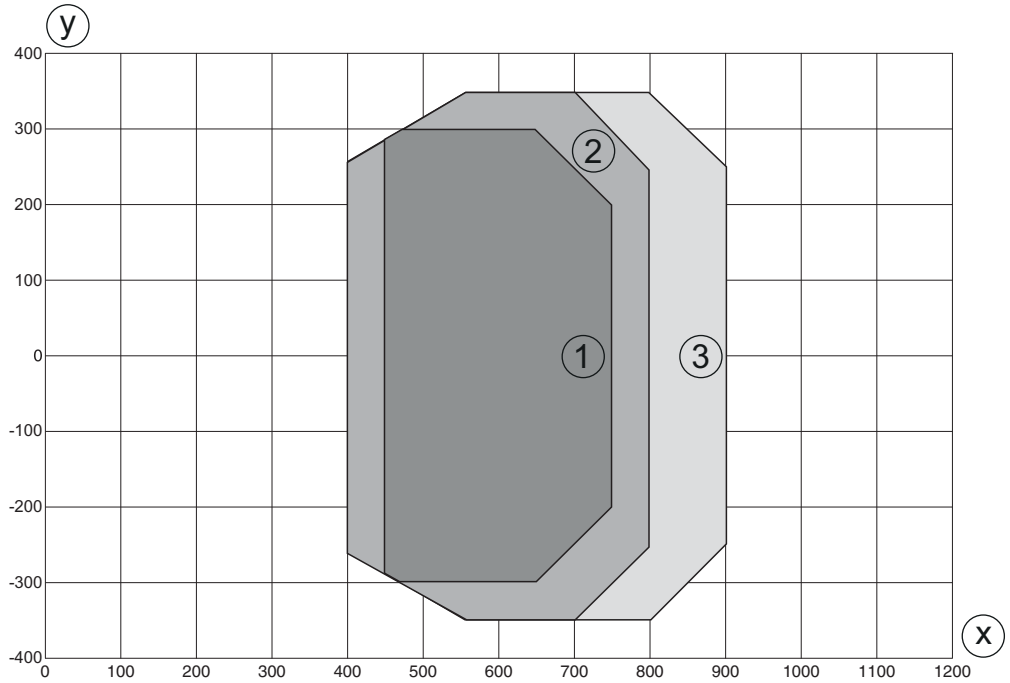

x	Reading field distance [mm]
y	Reading field width [mm]
1	Module = 0.25 mm: 450 mm - 750 mm (300 mm depth of field)
2	Module = 0.3 mm: 400 mm - 800 mm (400 mm depth of field)
3	Module = 0.35 mm: 400 mm - 900 mm (500 mm depth of field)

Figure 15.7: Reading field curve - Medium Density

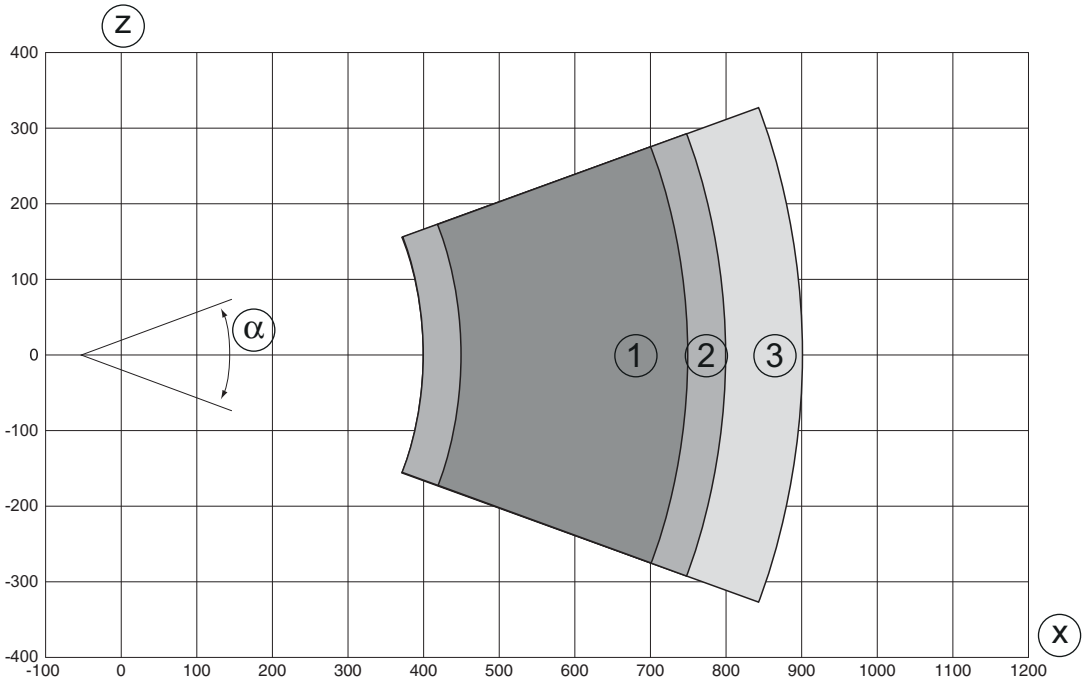

x	Reading field distance [mm]
z	Reading field height [mm]
a	Swivel range, ± 20°
1	Module = 0.25 mm: 450 mm - 750 mm (300 mm depth of field)
2	Module = 0.3 mm: 400 mm - 800 mm (400 mm depth of field)
3	Module = 0.35 mm: 400 mm - 900 mm (500 mm depth of field)

Figure 15.8: Lateral reading field curve - Medium Density for oscillating-mirror scanner

15.5.2 Low Density (F) - optics

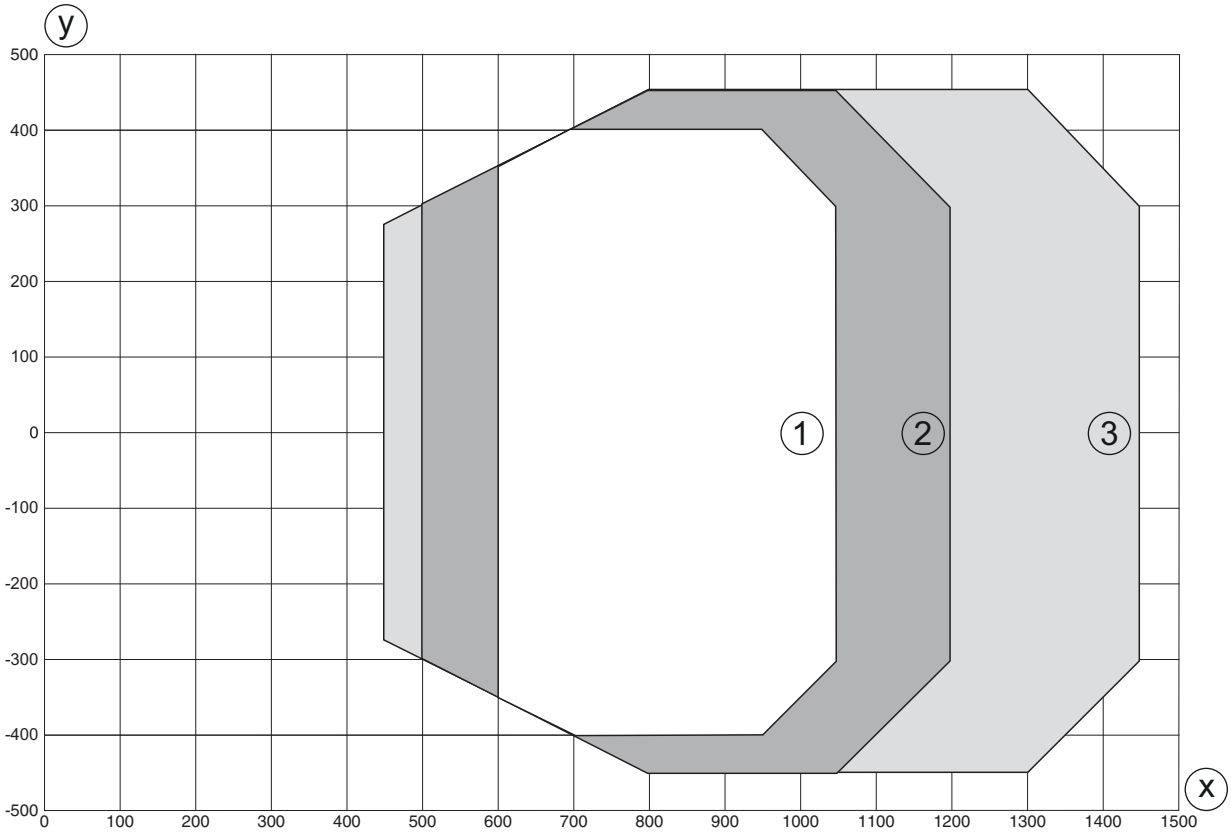

x	Reading field distance [mm]
y	Reading field width [mm]
1	Module = 0.3 mm: 600 mm - 1050 mm (450 mm depth of field)
2	Module = 0.35 mm: 500 mm - 1200 mm (700 mm depth of field)
3	Module = 0.5 mm: 450 mm - 1450 mm (1000 mm depth of field)

Figure 15.9: Reading field curve - Low Density for line scanner

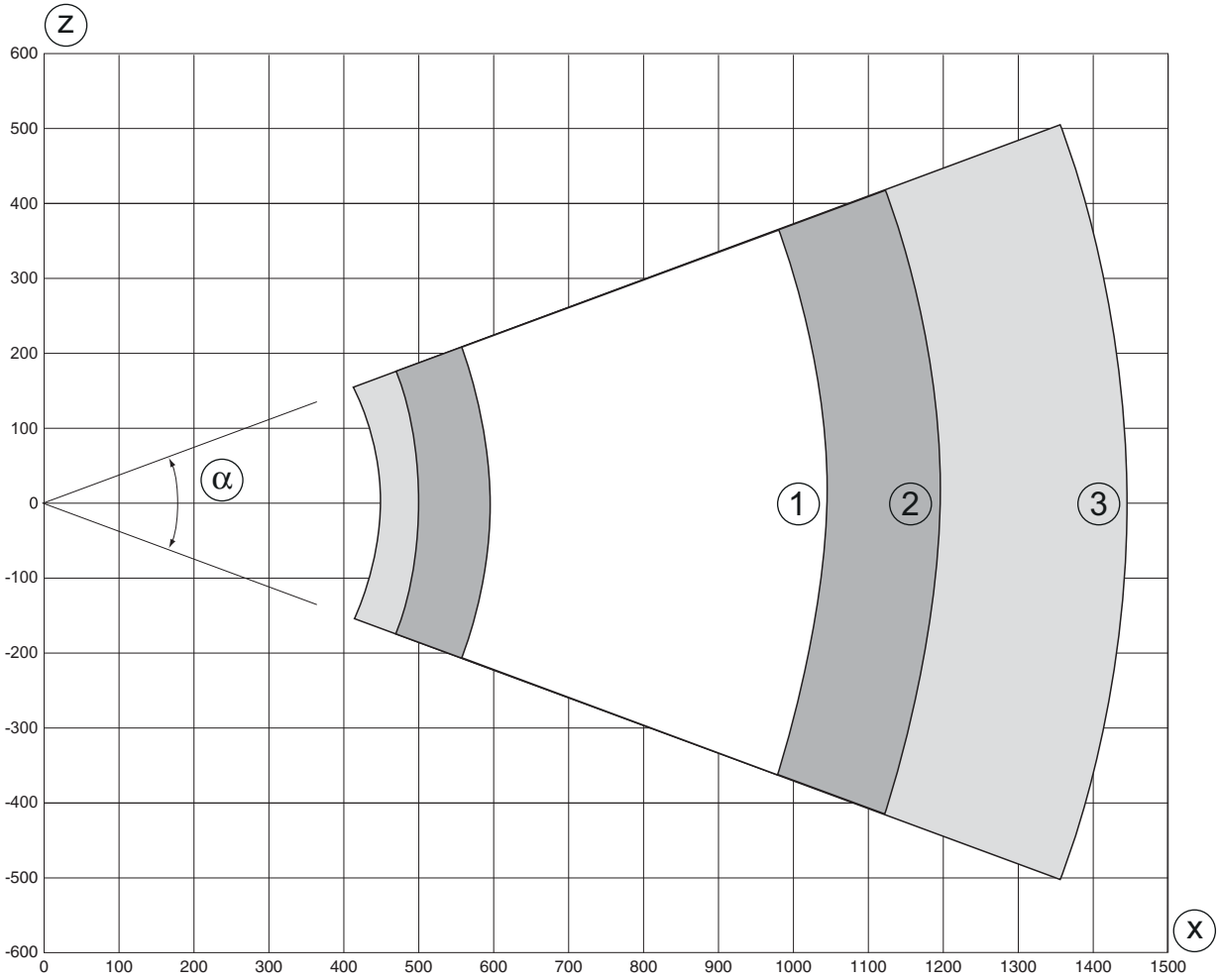

x	Reading field distance [mm]
z	Reading field height [mm]
a	Swivel range, ± 20°
1	Module = 0.3 mm: 600 mm - 1050 mm (450 mm depth of field)
2	Module = 0.35 mm: 500 mm - 1200 mm (700 mm depth of field)
3	Module = 0.5 mm: 450 mm - 1450 mm (1000 mm depth of field)

Figure 15.10: Lateral reading field curve - Low Density for oscillating-mirror scanner

16 Ordering information and accessories

16.1 Nomenclature

Part designation:
BCL 6xxi SO 10X

Table 16.1: Part number code

BCL	Bar code reader
6	Series: BCL 600
xx	Interface: 08: Ethernet 48: Profinet
i	Integrated network
S	Scanning principle: S: line scanner O: oscillating-mirror scanner
O	Optics: M: Medium Density (medium distance) F: Low Density (large distance)
X	Beam exit: 0 = perpendicular 1 = front

A list with all available device types can be found on the Leuze electronic website at **www.leuze.com**.

16.2 Type overview

Table 16.2: BCL 648i part numbers

Part no.	Part designation	Description
50126973	BCL 648i SM 102	Line scanner, front beam exit, Medium Density
50126974	BCL 648i OM 100	Oscillating-mirror scanner, Medium Density
50126975	BCL 648i SF 102	Line scanner, front beam exit, Low Density
50126976	BCL 648i OF 100	Oscillating-mirror scanner, Low Density

16.3 Accessories

Table 16.3: Accessories

Part no.	Part designation	Description
Voltage supply connection cables		
50104557	K-D M12A-5P-5m-PVC	M12 socket for PWR, axial plug outlet, open cable end, cable length 5m
50104559	K-D M12A-5P-10m-PVC	M12 socket for PWR, axial plug outlet, open cable end, cable length 10m

Part no.	Part designation	Description
BUS IN connection cables, M12 plug, axial cable outlet, open cable end		
50106739	KB ET - 2000 - SA	Cable length 2 m
50106740	KB ET - 5000 - SA	Cable length 5 m
50106741	KB ET - 10000 - SA	Cable length 10 m
50106742	KB ET - 15000 - SA	Cable length 15 m
50106746	KB ET - 30000 - SA	Cable length 30 m
BUS IN connection cables, M12 plug to RJ-45 plug		
50109880	KB ET - 2000 - SA-RJ45	Cable length 2 m
50109881	KB ET - 5000 - SA-RJ45	Cable length 5 m
50109882	KB ET - 10000 - SA-RJ45	Cable length 10 m
50109883	KB ET - 15000 - SA-RJ45	Cable length 15 m
50109886	KB ET - 30000 - SA-RJ45	Cable length 30 m
BUS OUT to BUS IN connection cables, M12 plug to M12 plug		
50106899	KB ET - 2000 - SSA	Cable length 2 m
50106900	KB ET - 5000 - SSA	Cable length 5 m
50106901	KB ET - 10000 - SSA	Cable length 10 m
50106902	KB ET - 15000 - SSA	Cable length 15 m
50106905	KB ET - 30000 - SSA	Cable length 30 m
Connector		
50020501	KD 095-5A	M12 socket for voltage supply
50040155	KS 095-4A	M12 plug for SW IN/OUT
50108991	D-ET1	RJ45 plug for user-configuration
50109832	KDS ET M12 / RJ 45 W - 4P	Converter from M12 D-coded to RJ 45 socket
50112155	S-M12A-ET	Ethernet connector, M12 axial. Plug, 4-pin, D-coded
USB cables		
50107726	KB USB-Service	USB service cable
External parameter memory		
50108833	USB Memory Set	External USB parameter memory
Mounting devices		
50027375	BT 56	Mounting device for rod
50111224	BT 59	Mounting device for ITEM
50106119	Reflective tape no. 4 100 x 100 mm	Reflective tape as reflector for AutoReflAct operation

17 EC Declaration of Conformity

The bar code readers of the BCL 600 series have been developed and manufactured in accordance with the applicable European standards and directives.

The manufacturer of the product, **Leuze electronic GmbH + Co. KG** in D-73277 Owen, possesses a certified quality assurance system in accordance with ISO 9001.

Leuze electronic

the sensor people

EG-KONFORMITÄTS-ERKLÄRUNG	EC DECLARATION OF CONFORMITY	DECLARATION CE DE CONFORMITE
Der Hersteller	The Manufacturer	Le constructeur
	Leuze electronic GmbH + Co. KG **In der Braike 1, PO Box 1111** **73277 Owen, Germany**	
erklärt, dass die nachfolgend aufgeführten Produkte den einschlägigen Anforderungen der genannten EG-Richtlinien entsprechen.	declares that the following listed products fulfil the relevant provisions of the mentioned EC Directives.	déclare que les produits identifiés suivants sont conformes aux directives CE mentionnées.
Produktbeschreibung:	Description of product:	Description de produit:
Stationärer Barcodeleser **BCL 6xxi ...**	**Stationary barcode reader** **BCL 6xxi ...**	**Lecteur de code à barres stationnaire** **BCL 6xxi ...**
Angewandte EG-Richtlinie(n):	Applied EC Directive(s):	Directive(s) CE appliquées:
2004/108/EG **2006/95/EG**	**2004/108/EC** **2006/95/EC**	**2004/108/CE** **2006/95/CE**
Angewandte Normen:	Applied standards:	Normes appliquées:
EN 61000-6-2: 2005 **EN 60825-1: 2007**		**EN 61000-6-4: 2007 + A11: 2011**

15. 1. 2015

Datum / Date / Date

Ulrich Balbach, Geschäftsführer / Managing Director / Gérant

Leuze electronic GmbH + Co. KG
In der Braike 1
D-73277 Owen
Telefon +49 (0) 7021 573-0
Telefax +49 (0) 7021 573-199
info@leuze.de
www.leuze.com

LEO-ZQM-148-04-FO

Leuze electronic GmbH + Co. KG, Sitz Owen, Registergericht Stuttgart, HRA 230712
Persönlich haftende Gesellschafterin Leuze electronic Geschäftsführungs-GmbH, Sitz Owen, Registergericht Stuttgart, HRB 230550
Geschäftsführer: Ulrich Balbach
USt.-IdNr. DE 145912521 | Zollnummer 2554232

Es gelten ausschließlich unsere aktuellen Verkaufs- und Lieferbedingungen
Only our current Terms and Conditions of Sale and Delivery shall apply

SMART SENSOR BUSINESS

18 Appendix

18.1 ASCII character set

ASCII	Dec.	Hex.	Oct.	Designation	Meaning
NUL	0	00	0	NULL	Zero
SOH	1	01	1	START OF HEADING	Start of heading
STX	2	02	2	START OF TEXT	Start of text characters
ETX	3	03	3	END OF TEXT	Last character of text
EOT	4	04	4	END OF TRANSMISS.	End of transmission
ENQ	5	05	5	ENQUIRY	Request for data trans.
ACK	6	06	6	ACKNOWLEDGE	Positive acknowledgment
BEL	7	07	7	BELL	Bell signal
BS	8	08	10	BACKSPACE	Backspace
HT	9	09	11	HORIZ. TABULATOR	Horizontal tabulator
LF	10	0A	12	LINE FEED	Line feed
VT	11	0B	13	VERT. TABULATOR	Vertical tabulator
FF	12	0C	14	FORM FEED	Form feed
CR	13	0D	15	CARRIAGE RETURN	Carriage return
SO	14	0E	16	SHIFT OUT	Shift out
SI	15	0F	17	SHIFT IN	Shift in
DLE	16	10	20	DATA LINK ESCAPE	Data link escape
DC1	17	11	21	DEVICE CONTROL 1	Device control character 1
DC2	18	12	22	DEVICE CONTROL 2	Device control character 2
DC3	19	13	23	DEVICE CONTROL 3	Device control character 3
DC4	20	14	24	DEVICE CONTROL 4	Device control character 4
NAK	21	15	25	NEG. ACKNOWLEDGE	Negative acknowledge
SYN	22	16	26	SYNCHRONOUS IDLE	Synchronization
ETB	23	17	27	EOF TRANSM. BLOCK	End of data transmission block
CAN	24	18	30	CANCEL	Invalid
EM	25	19	31	END OF MEDIUM	End of medium
SUB	26	1A	32	SUBSTITUTE	Substitution
ESC	27	1B	33	ESCAPE	Escape
FS	28	1C	34	FILE SEPARATOR	File separator
GS	29	1D	35	GROUP SEPARATOR	Group separator
RS	30	1E	36	RECORD SEPARATOR	Record separator

ASCII	Dec.	Hex.	Oct.	Designation	Meaning
US	31	1F	37	UNIT SEPARATOR	Unit separator
SP	32	20	40	SPACE	Space
!	33	21	41	EXCLAMATION POINT	Exclamation point
"	34	22	42	QUOTATION MARK	Quotation mark
#	35	23	43	NUMBER SIGN	Number sign
$	36	24	44	DOLLAR SIGN	Dollar sign
%	37	25	45	PERCENT SIGN	Percent sign
&	38	26	46	AMPERSAND	Ampersand
’	39	27	47	APOSTROPHE	Apostrophe
(	40	28	50	OPEN. PARENTHESIS	Open parenthesis
)	41	29	51	CLOS. PARENTHESIS	Closed parenthesis
*	42	2A	52	ASTERISK	Asterisk
+	43	2B	53	PLUS	Plus sign
,	44	2C	54	COMMA	Comma
-	45	2D	55	HYPHEN (MINUS)	Hyphen
.	46	2E	56	PERIOD (DECIMAL)	Period (decimal)
/	47	2F	57	SLANT	Slant
0	48	30	60	0	Number
1	49	31	61	1	Number
2	50	32	62	2	Number
3	51	33	63	3	Number
4	52	34	64	4	Number
5	53	35	65	5	Number
6	54	36	66	6	Number
7	55	37	67	7	Number
8	56	38	70	8	Number
9	57	39	71	9	Number
:	58	3A	72	COLON	Colon
;	59	3B	73	SEMICOLON	Semicolon
<	60	3C	74	LESS THAN	Less than
=	61	3D	75	EQUALS	Equals
>	62	3E	76	GREATER THAN	Greater than
?	63	3F	77	QUESTION MARK	Question mark
@	64	40	100	COMMERCIAL AT	Commercial AT

ASCII	Dec.	Hex.	Oct.	Designation	Meaning
A	65	41	101	A	Capital letter
B	66	42	102	B	Capital letter
C	67	43	103	C	Capital letter
D	68	44	104	D	Capital letter
E	69	45	105	E	Capital letter
F	70	46	106	F	Capital letter
G	71	47	107	G	Capital letter
H	72	48	110	H	Capital letter
I	73	49	111	I	Capital letter
J	74	4A	112	J	Capital letter
K	75	4B	113	K	Capital letter
L	76	4C	114	L	Capital letter
M	77	4D	115	M	Capital letter
N	78	4E	116	N	Capital letter
O	79	4F	117	O	Capital letter
P	80	50	120	P	Capital letter
Q	81	51	121	Q	Capital letter
R	82	52	122	R	Capital letter
S	83	53	123	S	Capital letter
T	84	54	124	T	Capital letter
U	85	55	125	U	Capital letter
V	86	56	126	V	Capital letter
W	87	57	127	W	Capital letter
X	88	58	130	X	Capital letter
Y	89	59	131	Y	Capital letter
Z	90	5A	132	Z	Capital letter
[	91	5B	133	OPENING BRACKET	Opening bracket
\	92	5C	134	REVERSE SLANT	Reverse slant
]	93	5D	135	CLOSING BRACKET	Closing bracket
^	94	5E	136	CIRCUMFLEX	Circumflex
_	95	5F	137	UNDERSCORE	Underscore
‘	96	60	140	GRAVE ACCENT	Grave accent
a	97	61	141	a	Lower case letter
b	98	62	142	b	Lower case letter

ASCII	Dec.	Hex.	Oct.	Designation	Meaning
c	99	63	143	c	Lower case letter
d	100	64	144	d	Lower case letter
e	101	65	145	e	Lower case letter
f	102	66	146	f	Lower case letter
g	103	67	147	g	Lower case letter
h	104	68	150	h	Lower case letter
i	105	69	151	i	Lower case letter
j	106	6A	152	j	Lower case letter
k	107	6B	153	k	Lower case letter
l	108	6C	154	l	Lower case letter
m	109	6D	155	m	Lower case letter
n	110	6E	156	n	Lower case letter
o	111	6F	157	o	Lower case letter
p	112	70	160	p	Lower case letter
q	113	71	161	q	Lower case letter
r	114	72	162	r	Lower case letter
s	115	73	163	s	Lower case letter
t	116	74	164	t	Lower case letter
u	117	75	165	u	Lower case letter
v	118	76	166	v	Lower case letter
w	119	77	167	w	Lower case letter
x	120	78	170	x	Lower case letter
y	121	79	171	y	Lower case letter
z	122	7A	172	z	Lower case letter
{	123	7B	173	OPENING BRACE	Opening brace
|	124	7C	174	VERTICAL LINE	Vertical line
}	125	7D	175	CLOSING BRACE	Closing brace
~	126	7E	176	TILDE	Tilde
DEL	127	7F	177	DELETE (RUBOUT)	Delete

18.2 Bar code samples

18.2.1 Module 0.3

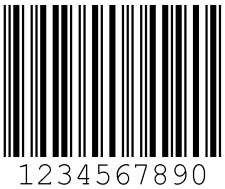

Figure 18.1: Code type 01: Interleaved 2 of 5

Figure 18.2: Code type 02: Code 39

Figure 18.3: Code type 06: UPC-A

Figure 18.4: Code type 07: EAN 8

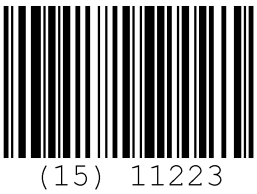

Figure 18.5: Code type 08: EAN 128

Figure 18.6: Code type 10: EAN 13 Add-on

Figure 18.7: Code type 11: Codabar

Figure 18.8: Code 128

18.2.2 Module 0.5

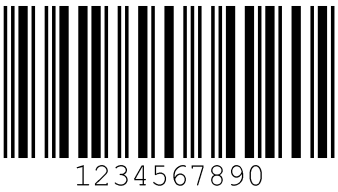

Figure 18.9: Code type 01: Interleaved 2 of 5

Figure 18.10:Code type 02: Code 39

Figure 18.11:Code type 06: UPC-A

Figure 18.12:Code type 07: EAN 8

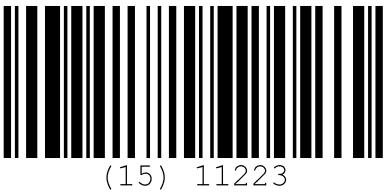

Figure 18.13: Code type 08: EAN 128

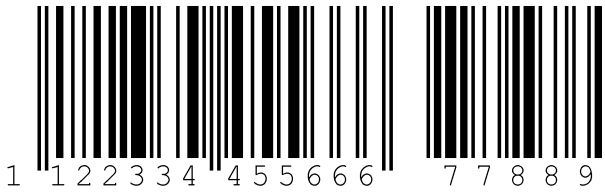

Figure 18.14: Code type 10: EAN 13 Add-on

Figure 18.15: Code type 11: Codabar

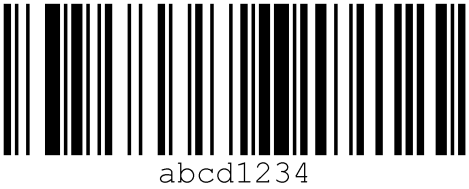

Figure 18.16: Code 128