Leuze electronic

the sensor people

SMART
SENSOR
BUSINESS

BCL 600i/BCL 601i

Bar code readers

EN 2016/10 - 50134518
We reserve the right to
make technical changes

Original operating instructions

ПРОМЭЛЕКТРОНИКА / sales@prom-elec.com

© 2016
Leuze electronic GmbH + Co. KG
In der Braike 1
D-73277 Owen / Germany
Phone: +49 7021 573-0
Fax: +49 7021 573-199
http://www.leuze.com
info@leuze.de

1 About this document . . . 6
1.1 Used symbols and signal words . . . 6

2 Safety . . . 7
2.1 Intended use . . . 7
2.2 Foreseeable misuse . . . 7
2.3 Competent persons . . . 7
2.4 Exemption of liability . . . 8
2.5 Laser safety notices . . . 8
2.5.1 Laser safety notices– laser class 2 . . . 8

3 Device description . . . 11
3.1 Device overview . . . 11
3.2 Performance characteristics . . . 11
3.3 Device construction . . . 13
3.4 Connection technology . . . 13
3.5 Display elements . . . 14
3.5.1 Structure of the control panel . . . 14
3.5.2 Status display and operation . . . 15
3.5.3 LED indicators . . . 15
3.6 Operational controls . . . 16
3.7 External parameter memory . . . 16

4 Functions . . . 17
4.1 autoReflAct . . . 18
4.2 Reference codes . . . 18
4.3 autoConfig . . . 18
4.4 Stand-alone connection . . . 19
4.5 Networking - Leuze multiNet plus . . . 19
4.6 Leuze multiScan . . . 20
4.7 Heater . . . 20

5 Reading techniques . . . 21
5.1 Line scanner (single line) . . . 21
5.2 Line scanner with oscillating mirror . . . 21
5.3 Omnidirectional reading . . . 22

6 Mounting . . . 24
6.1 Device arrangement . . . 24
6.1.1 Selecting a mounting location . . . 24
6.1.2 Avoiding total reflection – Line scanner . . . 24
6.1.3 Avoiding total reflection – oscillating-mirror scanner . . . 25
6.1.4 Possible read angles between device and bar code . . . 25
6.2 Installing the external parameter memory . . . 26

7 Electrical connection . . . 28
7.1 Overview . . . 28
7.2 PWR – Voltage supply and switching inputs/outputs 3 and 4 . . . 29
7.3 SERVICE – USB interface (type A) . . . 31
7.4 SW IN/OUT – Switching input/switching output . . . 31
7.5 HOST / BUS IN . . . 33

7.6 BUS OUT . . . 35
7.7 Cable lengths and shielding . . . 36
7.8 Leuze multiNet plus . . . 36
7.8.1 Wiring the multiNet plus . . . 37
7.8.2 The BCL 600i as network master . . . 38
7.8.3 The BCL 600i as network slave . . . 38
7.8.4 The BCL 601i as network slave . . . 39

8 Menu description . . . 40
8.1 The main menus . . . 40
8.2 Parameter menu . . . 40
8.3 Language selection menu . . . 46
8.4 Service menu . . . 47
8.5 Actions menu . . . 47
8.6 Operation . . . 48

9 Commissioning – Leuze electronic webConfig tool . . . 49
9.1 Connecting the service USB interface . . . 49
9.2 Installation . . . 49
9.2.1 System requirements . . . 49
9.2.2 Installing the USB driver . . . 49
9.3 Starting the webConfig tool . . . 50
9.4 Short description of the webConfig tool . . . 50
9.5 Module overview in the Configuration menu . . . 51

10 Starting up the device - Configuration . . . 52
10.1 Measures to be performed prior to the initial commissioning . . . 52
10.2 Starting the device . . . 52
10.3 BCL 600i operation . . . 52
10.3.1 Operation as stand-alone device . . . 52
10.3.2 Selecting the operating mode . . . 52
10.3.3 Operation as multiNet plus master . . . 53
10.4 BCL 601i operation . . . 54
10.5 Further settings . . . 55
10.5.1 Decoding and processing the read data . . . 55
10.5.2 Control of the decoding . . . 56
10.5.3 Control of the switching outputs . . . 56
10.6 Transmitting configuration data . . . 57
10.6.1 Via the webConfig tool . . . 57
10.6.2 With the external parameter memory . . . 57

11 Online commands . . . 58
11.1 General online commands . . . 58
11.2 Online commands for system control . . . 63
11.3 Online commands for the parameter set operations . . . 64

12 Care, maintenance and disposal . . . 71
12.1 Cleaning . . . 71
12.2 Servicing . . . 71
12.3 Disposing . . . 71

13 Diagnostics and troubleshooting . . . 72
13.1 General causes of errors . . . 72

13.2 Interface errors . . . 72

14 Service and support . . . 73
14.1 What to do should servicing be required? . . . 73

15 Technical data . . . 74
15.1 General specifications . . . 74
15.1.1 Line scanner . . . 74
15.1.2 Oscillating-mirror scanner . . . 76
15.2 Heating models of the bar code readers . . . 76
15.2.1 Line scanner with heater . . . 77
15.2.2 Oscillating-mirror scanner with heating . . . 78
15.3 Dimensioned drawings . . . 79
15.4 Dimensioned drawings: Accessories . . . 81
15.5 Reading field curves / optical data . . . 82
15.6 Reading field curves . . . 82
15.6.1 Medium Density (M) - optics . . . 84
15.6.2 Low Density (F) - optics . . . 85
15.7 Reading field curves for heating devices . . . 86
15.7.1 Medium Density (M) - optics: (with heating) . . . 87
15.7.2 Medium Density (M) - optics: (with heating) . . . 87
15.7.3 Low Density (F) - optics: (with heating) . . . 89
15.7.4 Low Density (F) - optics: (with heating) . . . 90

16 Ordering information and accessories . . . 92
16.1 Nomenclature . . . 92
16.2 Type overview . . . 92
16.3 Accessories . . . 93

17 EC Declaration of Conformity . . . 95

18 Appendix . . . 96
18.1 ASCII character set . . . 96
18.2 Bar code samples . . . 100
18.2.1 Module 0.3 . . . 100
18.2.2 Module 0.5 . . . 101

1 About this document

1.1 Used symbols and signal words

Table 1.1: Warning symbols and signal words

⚠	Symbol indicating dangers to persons
NOTE	Signal word for property damage Indicates dangers that may result in property damage if the measures for danger avoidance are not followed.

Table 1.2: Other symbols

ℹ	Symbol for tips Text passages with this symbol provide you with further information.
↳	Symbol for action steps Text passages with this symbol instruct you to perform actions.

Table 1.3: Terms and abbreviations

BCL	Bar code reader
CRT	Code reconstruction technology

2 Safety

This sensor was developed, manufactured and tested in line with the applicable safety standards. It corresponds to the state of the art.

2.1 Intended use

The device is designed as a stationary high-speed scanner with integrated decoder for all common bar codes for automatic object detection.

Areas of application

The device is specially designed for the following areas of application:

- Object identification on fast-moving conveyor lines
- Omnidirectional reading

⚠ CAUTION
Comply with conditions and regulations!
↳ Observe the locally applicable legal regulations and the rules of the employer's liability insurance association.

2.2 Foreseeable misuse

Any use other than that defined under “Intended use” or which goes beyond that use is considered improper use.

In particular, use of the device is not permitted in the following cases:

- in rooms with explosive atmospheres
- in circuits which are relevant to safety
- for medical purposes

⚠ CAUTION
Do not modify or otherwise interfere with the device!
↳ Do not carry out modifications or otherwise interfere with the device. The device must not be tampered with and must not be changed in any way. The device must not be opened. There are no user-serviceable parts inside. Repairs must only be performed by Leuze electronic GmbH + Co. KG.

2.3 Competent persons

Connection, mounting, commissioning and adjustment of the device must only be carried out by competent persons.

Prerequisites for competent persons:

- They have a suitable technical education.
- They are familiar with the rules and regulations for occupational safety and safety at work.
- They are familiar with the technical description of the device.
- They have been instructed by the responsible person on the mounting and operation of the device.

Certified electricians

Electrical work must be carried out by a certified electrician.

Due to their technical training, knowledge and experience as well as their familiarity with relevant standards and regulations, certified electricians are able to perform work on electrical systems and independently detect possible dangers.

In Germany, certified electricians must fulfill the requirements of accident-prevention regulations BGV A3 (e.g. electrician foreman). In other countries, there are respective regulations that must be observed.

2.4 Exemption of liability

Leuze electronic GmbH + Co. KG is not liable in the following cases:

- The device is not being used properly.
- Reasonably foreseeable misuse is not taken into account.
- Mounting and electrical connection are not properly performed.
- Changes (e.g., constructional) are made to the device.

2.5 Laser safety notices

2.5.1 Laser safety notices– laser class 2

ATTENTION, LASER RADIATION – LASERCLASS2

Never look directly into the beam!

The device satisfies the requirements of IEC 60825-1:2007 (EN 60825-1:2007) safety regulations for a product of **laser class 2** as well as the U.S. 21 CFR 1040.10 regulations with deviations corresponding to “Laser Notice No. 50” from June 24, 2007.

- Never look directly into the laser beam or in the direction of reflected laser beams!

  If you look into the beam path over a longer time period, there is a risk of injury to the retina.
- Do not point the laser beam of the device at persons!
- Interrupt the laser beam using a non-transparent, non-reflective object if the laser beam is accidentally directed towards a person.
- When mounting and aligning the device, avoid reflections of the laser beam off reflective surfaces!
- CAUTION! The use of operating or adjusting devices other than those specified here or carrying out of differing procedures may lead to dangerous exposure to radiation.
- Observe the applicable statutory and local laser protection regulations.
- The device must not be tampered with and must not be changed in any way.

  There are no user-serviceable parts inside the device.

  Repairs must only be performed by Leuze electronic GmbH + Co. KG.

CAUTION

Affix laser information and warning signs!

Laser information and warning signs attached to the device(see figure 2.1). Also included with the device are self-adhesive laser warning and laser information signs (stick-on labels) in multiple languages (see figure 2.3).

- Affix the laser information sheet to the device in the language appropriate for the place of use.

  When using the device in the U.S.A., use the stick-on label with the “Complies with 21 CFR 1040.10” notice.
- Affix the laser information and warning signs near the device if no signs are attached to the device (e.g. because the device is too small) or if the attached laser information and warning signs are concealed due to the installation position.

  Affix the laser information and warning signs so that they are legible without exposing the reader to the laser radiation of the device or other optical radiation.

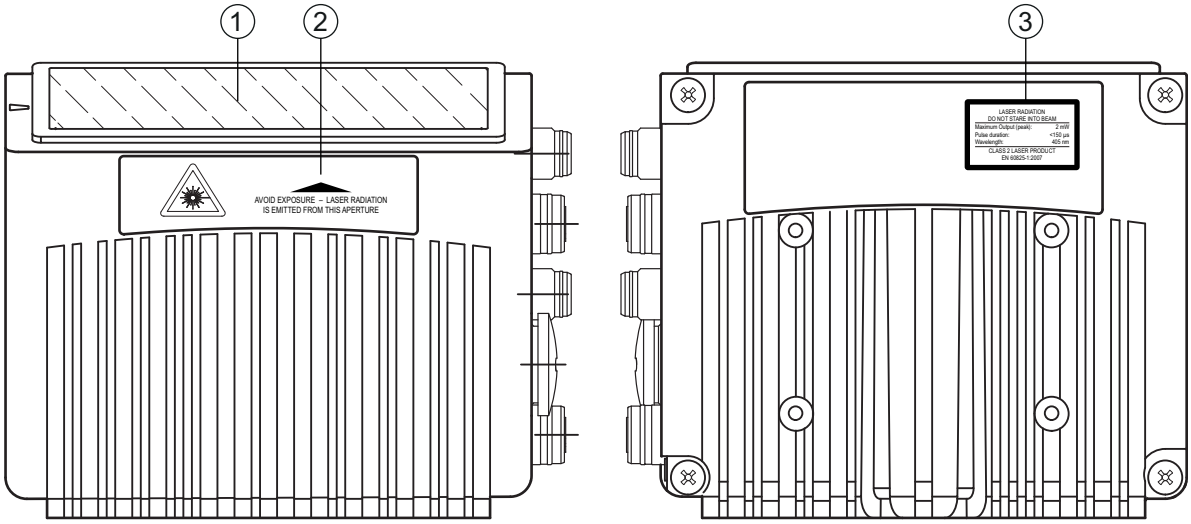

1 Laser aperture
2 Laser warning sign
3 Laser information sign with laser parameters

Figure 2.1: Laser aperture, laser warning and information signs - line scanner

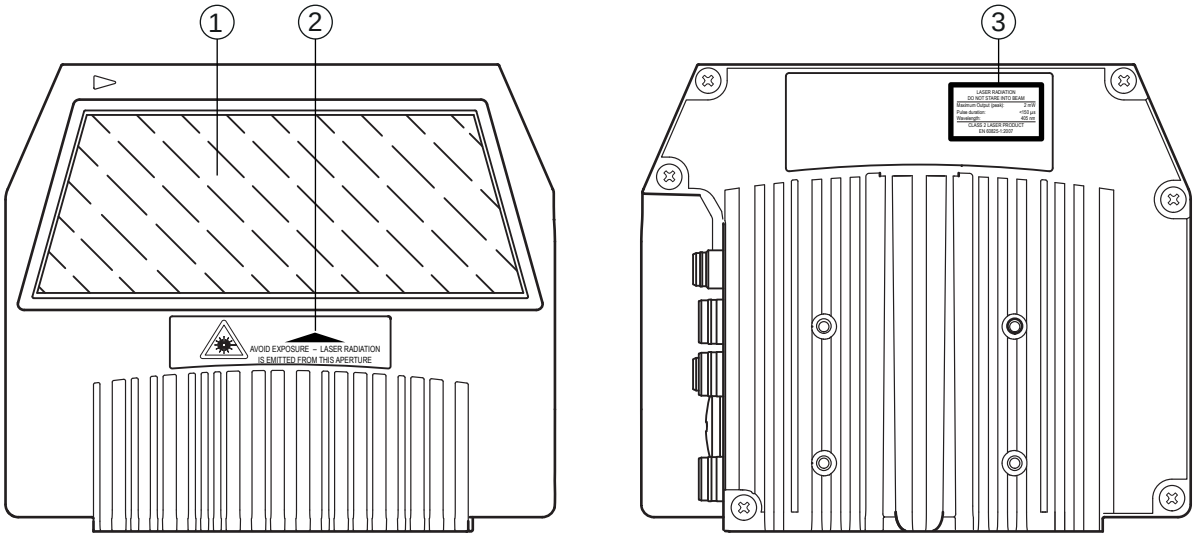

1 Laser aperture
2 Laser warning sign
3 Laser information sign with laser parameters

Figure 2.2: Laser aperture, laser warning and information signs - oscillating-mirror scanner

Figure 2.3: Laser warning and information signs – supplied stick-on labels

3 Device description

3.1 Device overview

Bar code readers of the BCL 600i series are high-speed scanners with integrated decoder for all commonly used bar codes, e.g. 2/5 Interleaved, Code 39, Code 128, EAN 8/13 etc., as well as codes from the GS1 DataBar family.

Bar code readers of the BCL 600i series are available in various optics models as well as line scanners and oscillating mirrors and also optionally as heated models.

1 Line scanner
2 Oscillating-mirror scanner

Figure 3.1: Line scanner and oscillating-mirror scanner

The extensive options for device configuration via display or software enable adaptation to a multitude of reading tasks. Due to the large reading distance combined with the great depth of field and a very compact construction, the device is ideally suited for package and pallet transportation systems. In general, the bar code readers of the BCL 600i series are designed for the conveyor and storage technology market.

The interfaces (RS 232, RS 485 and RS 422) integrated in the various device models and the fieldbus systems (Profibus DP, PROFINET-IO, Ethernet TCP/IP / UDP and Ethernet/IP) of the BCL 600i series bar code readers offer optimum connection to the superior host system.

3.2 Performance characteristics

- Integrated fieldbus connectivity = i -> Plug-and-Play fieldbus coupling and easy networking
- Numerous interface variants facilitate connection to the superior systems
  - RS 232, RS 422 as well as with integrated multiNet plus master
  - RS 485 and multiNet plus slave
  - Alternatively, various fieldbus systems, such as
    PROFIBUS DP
    PROFINET-IO
    Ethernet TCP/IP and UDP
    Ethernet/IP

- Integrated code reconstruction technology (CRT) enables the identification of soiled or damaged bar codes
- Maximum depth of field and reading distances from 400 mm to 1450 mm
- Large optical opening angle and, thus, large reading field width
- High scanning rate of 800 / 1000 scans/s for fast reading tasks
- Intuitive, backlit, multi-language display with user-friendly menu navigation
- Integrated USB 1.1 service interface
- Adjustment of all device parameters with a web browser
- Connection options for an external parameter memory
- Easy alignment- and diagnostics functions
- M 12 connections with Ultra-Lock ™ technology
- Four freely programmable switching inputs/outputs for the activation or signaling of states
- Automatic monitoring of the read quality with autoControl
- Automatic recognition and setting of the bar code type using autoConfig
- Reference code comparison
- Optional heating models to -35°C
- Heavy-duty housing of degree of protection IP 65

3.3 Device construction

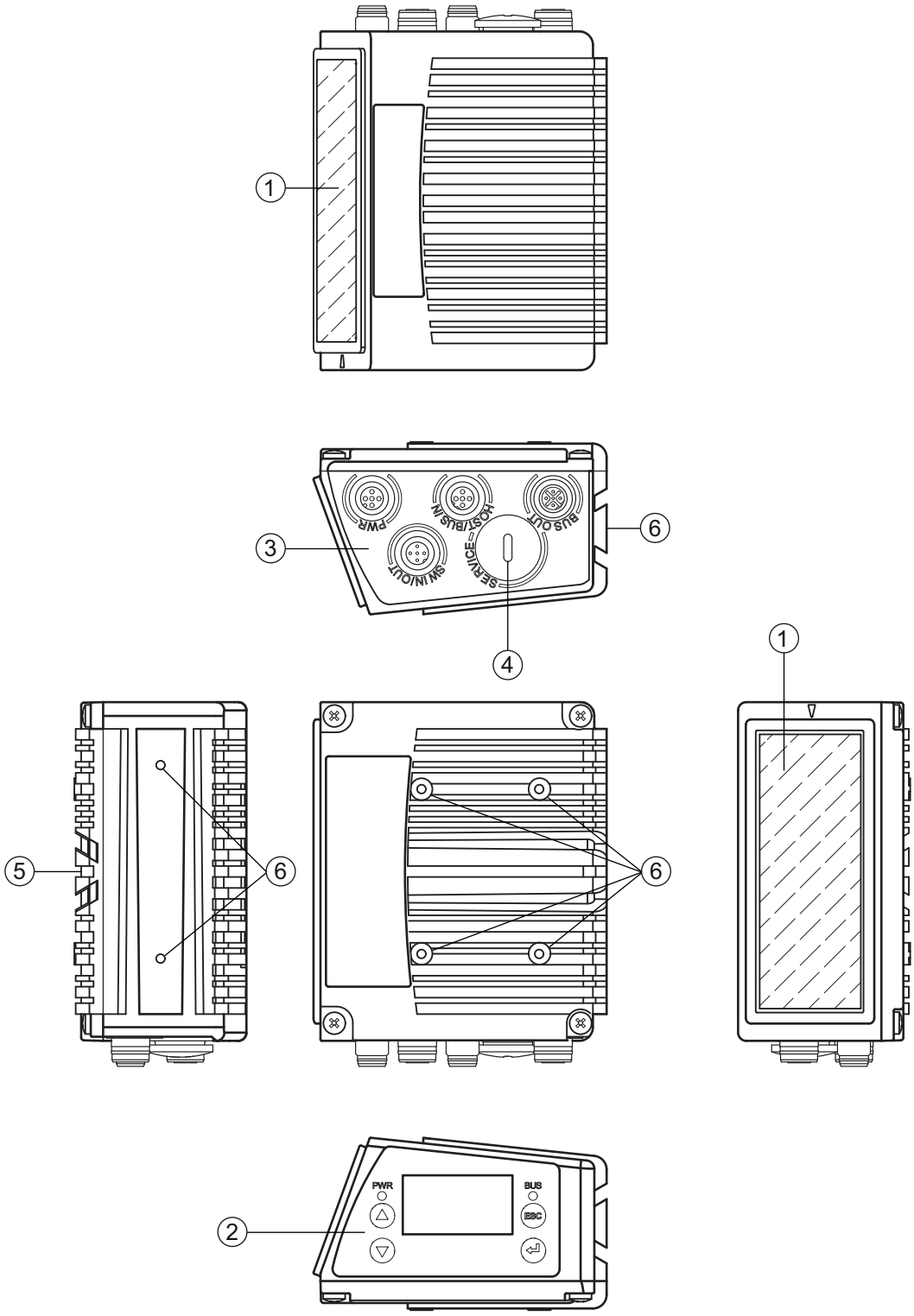

1 Reading window
2 Control panel with display, LEDs and buttons
3 M 12 connection technology
4 USB interface
5 Dovetail mounting
6 M4 mounting thread

Figure 3.2: Device construction

3.4 Connection technology

The bar code readers are connected using variously coded M 12 connectors. This ensures unique connection assignments.

The additional USB interface is used for configuring the device.
The two product series BCL 600i and BCL 601i differ in their interfaces and in their function as multiNet plus master or slave.

Table 3.1: BCL 600i/BCL 601i interfaces

	HOST / BUS IN	BUS OUT
BCL 600i (Stand alone or multiNet plus Master)	RS 232 / RS 422	RS 485
BCL 601i (multiNet plus slave)	RS 485	RS 485

For the locations of the individual device connections, please refer to the device detail shown below.

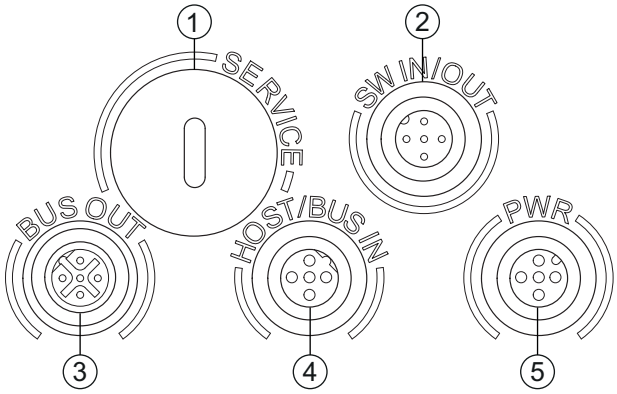

1 Service, USB socket, type A
2 SW IN/OUT, M 12 socket (A-coded)
3 Bus OUT, M 12 socket (D-coded)
4 HOST/BUS IN, M 12 socket (D-coded)
5 PWR, M 12 connector (A-coded)

Figure 3.3: Location of the electrical connections

3.5 Display elements

3.5.1 Structure of the control panel

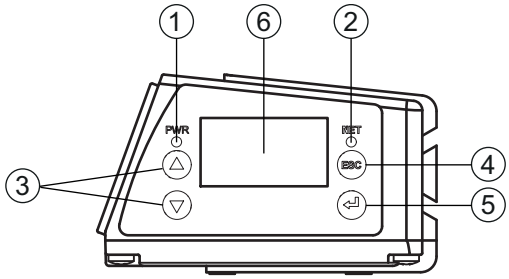

1 PWR LED
2 NET LED
3 Navigation buttons
4 Escape button
5 Enter button
6 Display

Figure 3.4: Structure of the control panel

3.5.2 Status display and operation

Indicators in the display

Table 3.2: Status displays of the switching inputs/outputs

IO1	Switching input or switching output 1 active (function dependent on set configuration). Default: Switching input with the “Reading gate activation”
IO2	Switching input or switching output 2 active (function dependent on set configuration). Default: Input with the “Teach-in”
IO3	Switching input or switching output 3 active (function dependent on set configuration). Default: Switching input with the “Reading gate activation”
IO4	Switching input or switching output 4 active (function dependent on set configuration). Default: Switching output with the “No read”
ATT	Warning (Attention)
ERR	Internal device error (Error) -> The device must be sent in for inspection

Table 3.3: Status display of the USB interface

USB	The device is connected to a PC via the USB interface.
MS	An external parameter memory is properly connected to the USB interface of the device.

Read result

The read bar code information is displayed.

3.5.3 LED indicators

PWR LED

Off	Device OFF • No supply voltage
Flashes green	Device ok, initialization phase • No bar code reading possible • Voltage connected • Self test running • Initialization running
Green, continuous light	Device ok • Bar code reading possible • Self test successfully finished • Device monitoring active
Orange, continuous light	Service mode • Bar code reading possible • Configuration via the USB service interface • Configuration via the display • No data on the host interface
Flashes red	Device ok, warning set • Bar code reading possible • Temporary operating fault
Red, continuous light	Device error / parameter enable • No bar code reading possible

NET LED

Off	No supply voltage • No communication possible
Flashes green	Initialization • Of the device, establishing communication
Green, continuous light	Operation ok • Network mode ok
Flashes red	Communication error • Parameterization or configuration failed (parameter failure) • IO error • No data exchange
Red, continuous light	Network error No communication (protocol) to IO controller established (no data exchange)

3.6 Operational controls

Navigating within the menus

Use the navigation buttons ▲▼ to move through the menu. Activate the desired selection with the enter button ↵.

Press the escape button ESC to move up one menu level.

When one of the buttons is actuated, the display illumination is activated for 10 min.

Setting values

Set the desired value with the navigation buttons ▲▼ and the enter button ↵.

An accidental incorrect entry can be corrected by selecting the left arrow button and then pressing the enter button.

Then use the navigation buttons to select **save** and save the set value by pressing the enter button.

Selecting options

Set the desired option with the navigation buttons ▲▼ and the enter button ↵.

3.7 External parameter memory

The optionally available external parameter memory – based on a USB memory stick (compatible with version 1.1) – is housed in an external hood with integrated connectors which cover the USB service interface when installed (IP 65).

The external parameter memory makes it easy and reduces the time needed to replace a device on site by providing a copy of the current parameter set of the device. This eliminates the need to configure the exchanged device manually.

The delivery contents of the external parameter memory include the hood with integrated connectors with unscrewable cover and the USB memory stick.

For transferring the configuration with the aid of the external parameter memory see chapter 6.2.

4 Functions

General information

The integrated fieldbus connectivity = i contained in the bar code readers of the BCL 600i series facilitates the use of identification systems which function without connection unit or gateways. The integrated fieldbus interface considerably simplifies handling. The Plug-and-Play concept enables easy networking and very simple commissioning: Directly connect the respective fieldbus and all configuration is performed with no additional software.

For decoding bar codes, the bar code readers of the BCL 600i series make available the proven CRT decoder with code reconstruction technology:

The proven code reconstruction technology (CRT) enables bar code readers of the BCL 600i series to read bar codes with a small bar height, as well as bar codes with a damaged or soiled print image.

With the aid of the CRT decoder, bar codes can also be read without problem in other demanding situations, such as with a large tilt angle (azimuth angle or even twist angle).

Figure 4.1: Possible bar code orientation

The BCL 600i / BCL 601i can be operated and configured using the integrated webConfig tool via the USB service interface; alternatively, the bar code readers can be adjusted using configuration commands via the host/service interface.

The device needs a suitable activation to start a read process as soon as an object is in the reading field. This opens a time window (reading gate) in the device for the read process during which the bar code reader has time to detect and decode a bar code.

In the basic setting, triggering takes place through an external reading cycle signal. Alternative activation options include online commands via the host interface and the autoReflAct function. Through the read operation, the device collects additional useful pieces of data for diagnosis which can also be transmitted to the host. The quality of the read operation can be inspected using the alignment mode which is integrated in the webConfig tool.

A multi-language display with buttons is used to operate the device as well as for visualization purposes. Two LEDs provide additional optical information on the current operating state of the device.

The four freely configurable switching inputs/outputs SWIO 1 … SWIO 4 can be assigned various functions and control e.g. activation of the device or external devices, such as a PLC.

System, warning and error messages provide assistance in setup/troubleshooting during commissioning and read operation.

4.1 autoReflAct

autoReflAct stands for automatic Reflector Activation and permits an activation without additional sensors. This is achieved by directing the scanner with reduced scanning beam towards a reflector mounted behind the conveyor path. As long as the scanner is targeted at the reflector, the reading gate remains closed. If, however, the reflector is blocked by an object such as a container with a bar code label, the scanner activates the read procedure, and the label on the container is read. When the path from the scanner to the reflector has cleared, the read procedure has completed and the scanning beam is reduced and again directed onto the reflector. The reading gate is closed.

You will find a matching reflector in Accessories, and more are available on request.

Figure 4.2: Reflector arrangement for autoReflAct

The autoReflAct function uses the scanning beam to simulate a photoelectric sensor and thus permits an activation without additional sensors.

4.2 Reference codes

The device offers the possibility of storing one or two reference codes.

It is possible to store the reference codes by means of teach-in (display command), via the webConfig tool or via online commands.

The device can compare read bar codes with one and/or both reference codes and execute user-configurable functions depending on the comparison result.

4.3 autoConfig

With the autoConfig function, the device offers an extremely simple and convenient configuration option to users who only want to read one code type (symbology) with one number of digits at a time.

After starting the autoConfig function via the display, switching input or from a superior control, it is sufficient to position a bar code label with the desired code type and number of digits in the reading field of the device.

Afterward, bar codes with the same code type and number of digits are recognized and decoded.

4.4 Stand-alone connection

The bar code readers of the BCL 600i series can be operated as single “stand-alone” devices. The device features multiple M 12 connectors / sockets for the electrical connection of the supply voltage, the interface and the switching inputs and outputs.

1 Switching inputs/outputs
2 Supply voltage
3 PC / PLC host interface

Figure 4.3: Stand-alone connection

4.5 Networking - Leuze multiNet plus

In the Leuze multiNet plus network, up to 32 bar code readers can be networked together. The respective network devices transmit the read data when requested to by the BCL 600i (or MA 31) network master. For this purpose, each device is assigned its own station address, which is set using the display of the corresponding device.

The master then transmits the data of all network devices via its host interface to a superior PLC control system or a computer, i.e. it “collects” the scanner data in the network and transmits it to an interface on the host computer. This reduces interface costs (CPs) and time spent programming the software.

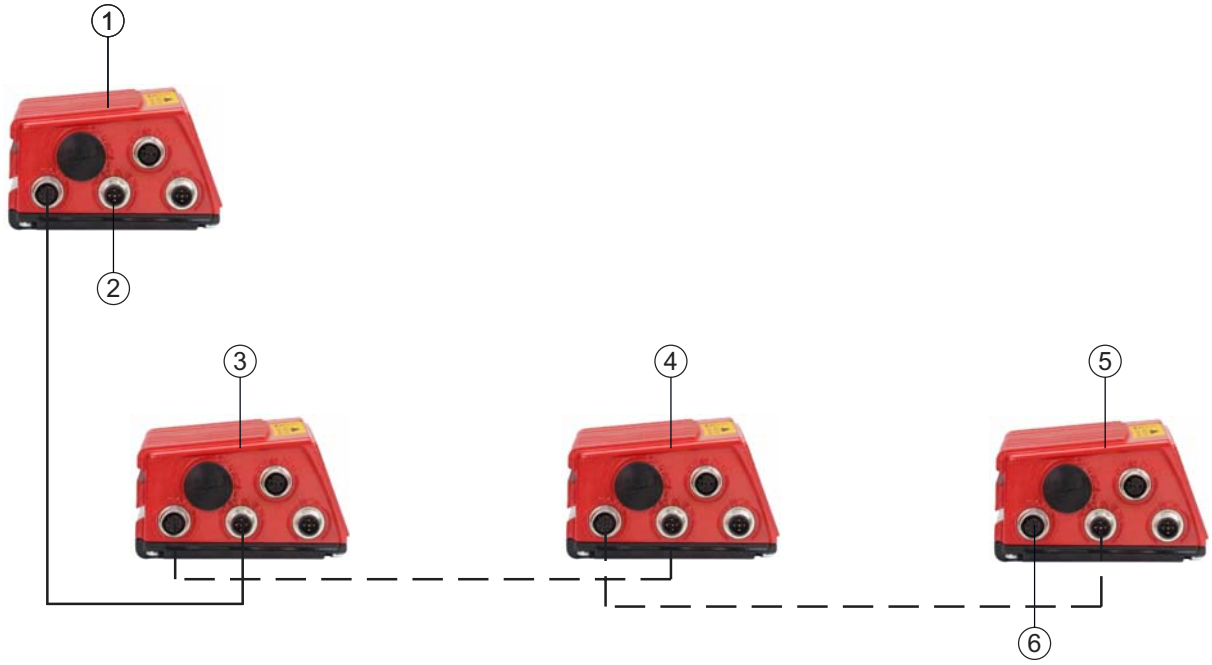

1 BCL 600i master
2 To PC/PLC
3 BCL 601i slave 1
4 BCL 601i slave 2
5 BCL 601i slave n
6 Terminating resistor on the last slave

Figure 4.4: Networking possibilities using the multiNet plus

Two-wire RS 485

The Leuze multiNet plus is optimized for fast transmission of scanner data to a primary host computer. The multiNet plus consists physically of a two-wire RS 485 interface through which the Leuze multiNet plus software protocol is controlled. This makes wiring the network easy and inexpensive as slaves are looped through to one another in parallel.

In principle, networking occurs via a parallel connection of the individual RS 485 interfaces of the respective bar code scanners. Shielded, twisted pair conductors should be used for the Leuze multiNet plus. This allows a total network length of up to 1200m.

4.6 Leuze multiScan

The multiScan operating mode is based on Leuze multiNet plus and links individual bar code readings from multiple bar code scanners into a single decoding result. This is used, for example, on a packet conveyor system on which the label can be affixed on either the right or left side, thereby requiring two read stations. To prevent the host from having to always process two readings for a single packet, i.e. a decoding result and a No Read, a multiScan arrangement is used which transmits only one reading from the two read stations to the host; this single reading is transmitted by the multiScan master.

Thus, from the perspective of the host, the scanner network appears to be just a single bar code reader!

For this purpose one multiScan master and one or more multiScan slaves are connected together via the RS 485 interface.

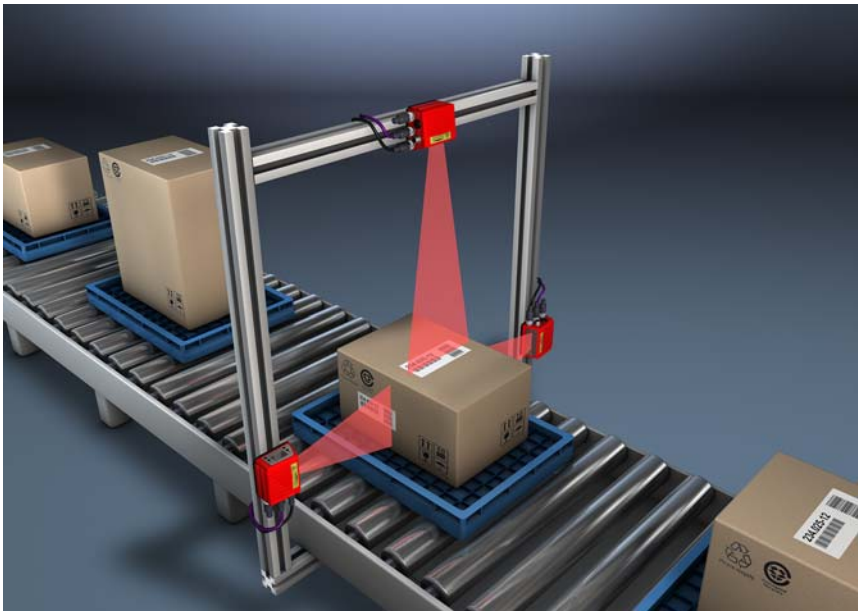

Figure 4.5: Scanner arrangement with the multiScan function

The multiScan function on the RS 485 interface is possible for minimum of 2 and a maximum of 32 devices!

The protocol set on the RS 485 interface is the multiNet protocol. As a result, during multiScan operation on the RS 485 interface, the multiNet master also functions as the multiScan master and the multiNet slaves function as multiScan slaves (thus, all multiNet slave are included in multiScan operation).

4.7 Heater

For low-temperature applications to min. -35°C (e.g. in cold storage), the bar code readers of the BCL 600i series can optionally be permanently fitted with a built-in heating and these bar code readers purchased as separate device models.

5 Reading techniques

5.1 Line scanner (single line)

A line (scan line) scans the label. Due to the opt. opening angle, the reading field width is dependent on the read distance. Through the movement of the object, the entire bar code is automatically transported through the scan line.

The integrated code reconstruction technology permits twisting of the bar code (tilt angle) within certain limits. These are dependent on the transport speed, the scanning rate of the scanner and the bar code properties.

Areas of application of the line scanner

The line scanner is used:

- when the bars of the bar code are printed in the conveying direction ('ladder arrangement').
- with bar codes having very short bar lengths.
- when the ladder code is turned out of the vertical position (tilt angle).
- when the reading distance is large.

Figure 5.1: Deflection principle for the line scanner

5.2 Line scanner with oscillating mirror

The oscillating mirror deflects the scan line additionally to both sides across the scan direction at a randomly adjustable oscillation frequency. In this way, the device can also scan larger areas or spaces for bar codes. The reading field height (and the scan line length useful for evaluation) depends on the reading distance due to the optical opening angle of the oscillating mirror.

Areas of application of the line scanner with oscillating mirror

For line scanners with oscillating mirror, oscillation frequency, start/stop position etc. are adjustable. It is used:

- when the position of the label is not fixed, e.g. on pallets – various labels can, thus, be detected at various positions.
- when the bars of the bar code are printed perpendicular to the conveying direction (“picket fence arrangement”).
- when reading stationary objects.
- when the bar code is turned out of the horizontal position.
- when the reading distance is large.
- when a large reading field (reading window) has to be covered.

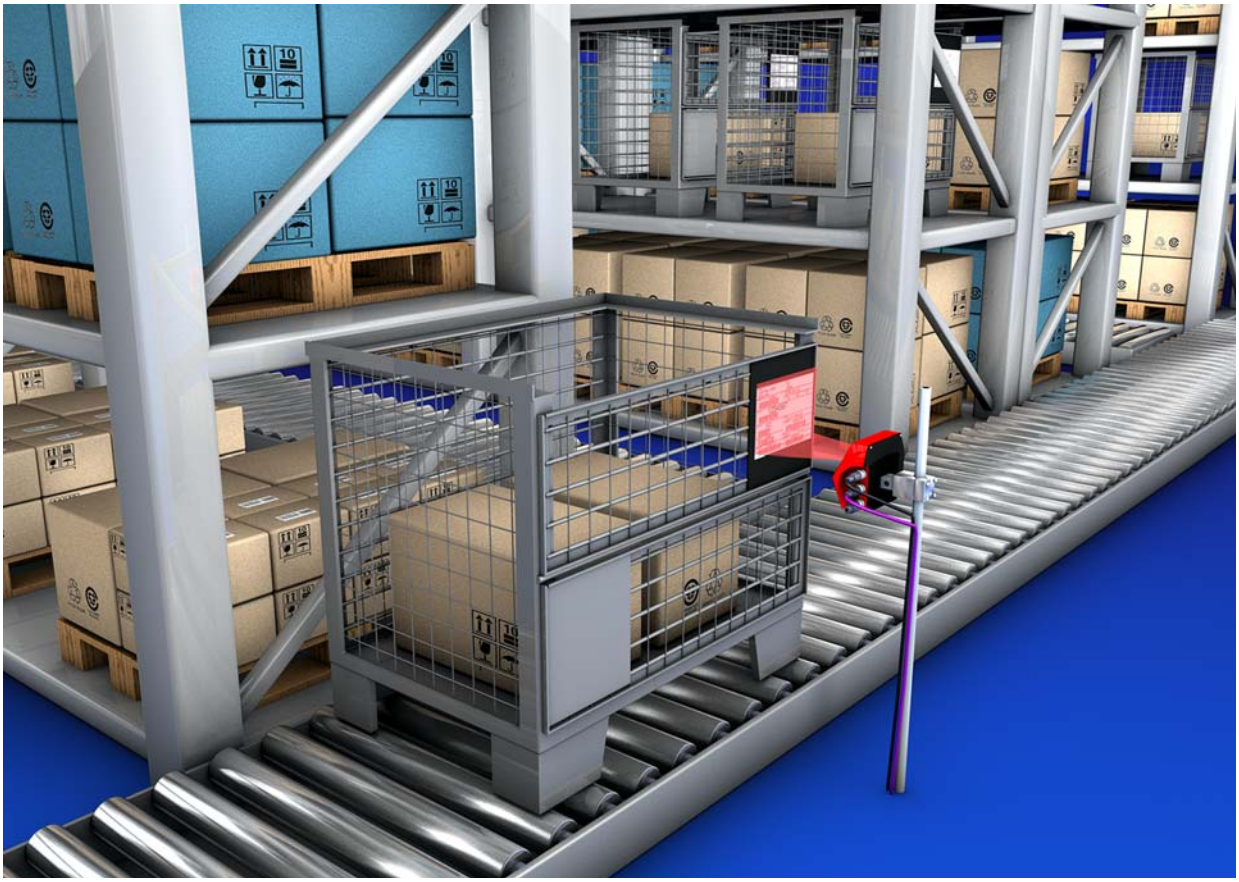

Figure 5.2: Deflection principle for the line scanner with oscillating mirror add-on

5.3 Omnidirectional reading

In order to read arbitrarily oriented bar codes on an object, at least 2 bar code readers are necessary. If the bar code is not printed over-square, i.e. bar length > code length, bar code readers with integrated code reconstruction technology are necessary.

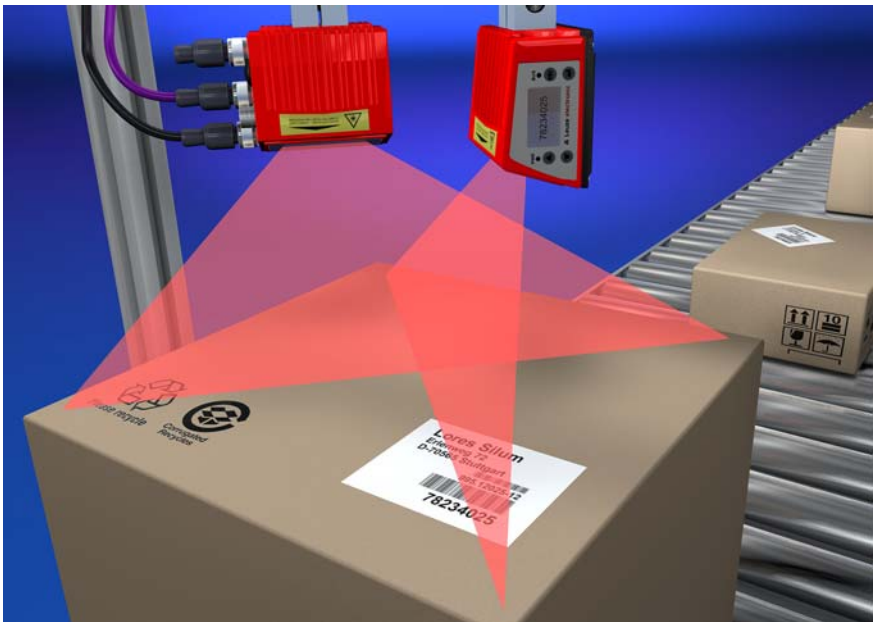

Figure 5.3: Principle arrangement for omnidirectional reading

6 Mounting

The bar code readers can be mounted in different ways:

- Using two M4x6 screws on the rear of the device or using four M4x6 screws on the bottom of the device (see figure 3.2).
- Using a BT 56 mounting device on the two fastening grooves (see figure 15.3).
- Using a BT 59 mounting device on the two fastening grooves (see figure 15.4).

6.1 Device arrangement

6.1.1 Selecting a mounting location

In order to select the right mounting location, several factors must be considered:

- Size, orientation, and position tolerance of the bar codes on the objects to be scanned.
- The reading field of the device in relation to the bar code module width.
- The resulting minimum and maximum reading distance from the respective reading field (see chapter 15.5 "Reading field curves / optical data").
- The permissible cable lengths between the device and the host system depending on which interface is used.
- The correct time for data output. The device should be positioned in such a way that, taking into consideration the time required for data processing and the conveyor belt speed, there is sufficient time to e.g. initiate sorting operations on the basis of the read data.
- The display and control panel should be very visible and accessible.
- For configuring and commissioning with the webConfig tool, the USB interface should be easily accessible.
- Maintaining the required environmental conditions (temperature, humidity).
- Possible soiling of the reading window due to liquids, abrasion by boxes, or packaging material residues.
- Lowest possible chance of damage to the device by mechanical collision or jammed parts.
- Possible extraneous light (no direct sunlight or sunlight reflected by the bar code).

With the line scanner, the beam exits the device parallel to the housing base; with the oscillating mirror, the beam exits perpendicular to the housing base. The housing base is the black surface.

The best read results are obtained when:

- The device is mounted in such a way that the scanning beam is incident on the bar code at an angle of inclination greater than ±10° … 15° to vertical.
- The reading distance lies in the middle area of the reading field.
- The bar code labels are of good print quality and have good contrast ratios.
- You do not use high-gloss labels.
- There is no direct sunlight.

6.1.2 Avoiding total reflection – Line scanner

The bar code label must be positioned at an angle of inclination greater than ±10° … 15° from vertical in order to avoid total reflection of the laser beam (see figure 6.1)!

Total reflection occurs whenever the laser light of the bar code reader is directly incident on the surface of the bar code at an angle of 90°. The light directly reflected by the bar code may overload the bar code reader and thereby cause non-readings!

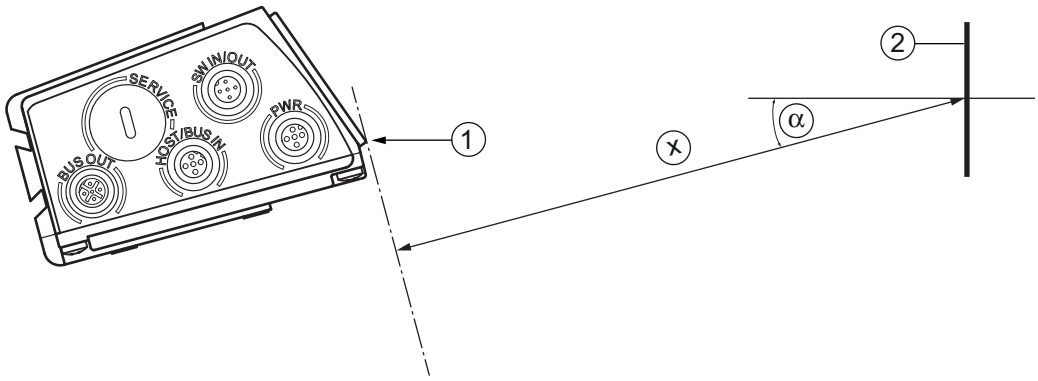

1 Zero position
2 Bar code
x Distance acc. to reading field curves
α ±10 … 15°

Figure 6.1: Total reflection – line scanner

6.1.3 Avoiding total reflection – oscillating-mirror scanner

For the device with oscillating mirror, the laser beam exits at an angle of 90° to vertical.

In addition, the swivel range of ±20° is to be taken into account.

This means that in order to be on the safe side and to avoid total reflection, the device with oscillating mirror must be inclined upward or downward 20° … 30°!

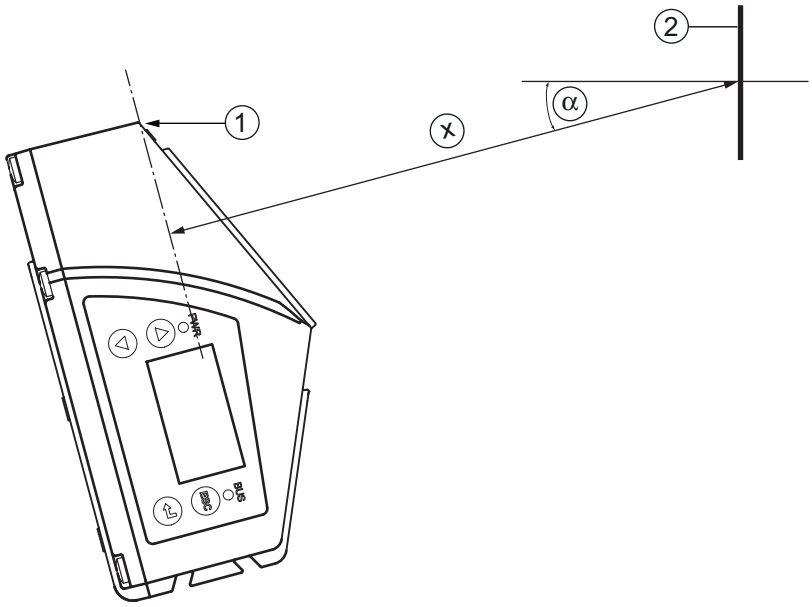

1 Zero position
2 Bar code
x Distance acc. to reading field curves
α ±25°

Figure 6.2: Total reflection – oscillating-mirror scanner

6.1.4 Possible read angles between device and bar code

The optimum alignment of the device is accomplished when the scan line scans the bar code bars almost at a right angle (90°). All reading angles that are possible between the scan line and bar code must be taken account (see figure 6.3).

α Azimuth angle (tilt)
β Inclination angle (pitch)
γ Angle of rotation (skew)
In order to avoid total reflection, the skew γ should be greater than 10 °

Figure 6.3: Reading angle for the line scanner

6.2 Installing the external parameter memory

↳ Remove the cover of the USB connection on the device.

↳ Insert the USB memory stick into the USB connection and then cover it with the connector hood to ensure degree of protection IP 65.

The USB memory stick can be inserted regardless of whether or not the device is connected to supply voltage.

- After the USB memory stick has been inserted and supply voltage applied, the following message appears on the display.
  Memory stick connected: Export internal configuration?

↳ Use the navigation buttons ▲▼ to select OK and activate with the enter button ↵.

The configuration is now transferred to the external parameter memory and is from now on updated immediately when the configuration is changed via display or online commands.

- The display of MS under the device address indicates that the USB memory stick is correctly connected and functional.

Replacing a defective device

↳ Uninstall the defective device.

↳ Remove the external parameter memory from the defective device by unscrewing the protection hood.

↳ Mount the external parameter memory on the new device.

↳ Install and start up the new device.

The following message appears on the display again:

- Memory stick connected: Export internal configuration?

↳ Use the navigation buttons ▲▼ to select Cancel and activate with the enter button ↵.

Make sure you select Cancel. Otherwise, the configuration in the external parameter memory is lost!

The configuration is now imported from the external parameter memory and the device is immediately operational without any further configuration.

7 Electrical connection

CAUTION

- Do not open the device yourself under any circumstances! There is otherwise a risk of uncontrolled emission of laser radiation from the device. The housing of the device contains no parts that need to be adjusted or maintained by the user.
- Before connecting the device, be sure that the supply voltage agrees with the value printed on the name plate.
- Connection of the device and cleaning must only be carried out by a qualified electrician.
- Ensure that the functional earth (FE) is connected correctly. Unimpaired operation is only guaranteed when the functional earth is connected properly.
- If faults cannot be cleared, the device should be switched off and protected against accidental use.

CAUTION

For UL applications, use is only permitted in Class 2 circuits in accordance with the NEC (National Electric Code). The bar code readers are designed in accordance with protection class III for supply by PELV (protective extra-low voltage with reliable disconnection).

CAUTION

Degree of protection IP 65 is achieved only if the connectors and caps are screwed into place!

7.1 Overview

As a “stand-alone” device, or multiNet plus “master” participant or network slave participant, the device is equipped with four M 12 plugs/sockets which are A- and B-coded.

The voltage supply (PWR) as well as the four freely configurable switching inputs/outputs (SW IN/OUT and PWR) are connected there.

An RS 232 or optionally RS 422 interface is available as “HOST / BUS IN” interface for connecting to the host system. An RS 485 is available as a second physical “BUS OUT” interface for setting up the Leuze multiNet plus scanner network. The device is suitable for use in the Leuze multiNet plus as network master/multiScan master.

An USB connection is used as a SERVICE interface.

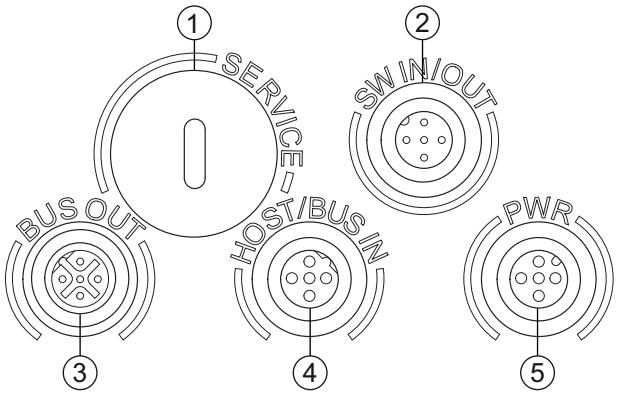

1 Service, USB socket, type A
2 SW In/Out, M 12 socket (A-coded)
3 Bus Out RS 485, M 12 socket (B-coded)
4 HOST/BUS in, M 12 connector (B-coded)
5 PWR, M 12 connector (A-coded)

Figure 7.1: Connections of the device

Described in detail in the following are the individual connections and pin assignments.

7.2 PWR – Voltage supply and switching inputs/outputs 3 and 4

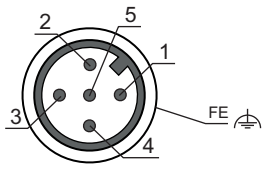

Figure 7.2: PWR, M 12 connector (A-coded)

Table 7.1: Pin assignments - PWR

Pin	Name	Comment
1	VIN	Positive supply voltage +10 ... +30 V DC
2	SWIO_3	Configurable switching input / output 3
3	GND	Negative supply voltage 0 V DC
4	SWIO_4	Configurable switching input / output 4
5	FE	Functional earth
Thread	FE	Functional earth (housing)

Supply voltage

CAUTION

For UL applications, use is only permitted in Class 2 circuits in accordance with the NEC (National Electric Code).

CAUTION

The bar code readers of the BCL 600i series are designed in accordance with protection class III for supply by PELV (protective extra-low voltage with reliable disconnection).

Connecting functional earth FE

↳ Ensure that the functional earth (FE) is connected correctly. Unimpaired operation is only guaranteed when the functional earth is connected properly. All electrical disturbances (EMC couplings) are discharged via the functional earth connection.

Switching input/output

The device is equipped with four freely programmable, opto-decoupled switching inputs and outputs SWIO_1 … SWIO_4.

The switching inputs can be used to activate various internal functions of the device (decoding, autoConfig, …). The switching outputs can be used to signal the state of the device and to implement external functions independent of the superior control.

The two switching inputs/outputs SWIO_1 and SWIO_2 are located on the SW IN/OUT M 12 socket (see chapter 7.4). The other two (SWIO_3 and SWIO_4) of the four freely configurable switching inputs/outputs are located on the PWR M 12 connector.

The respective function as input or output can be set via the display or with the aid of the “webConfig” configuration tool!

The external wiring as switching input and switching output is described in the following. For the respective function assignment to the switching inputs/outputs see chapter 10.

Function as switching input

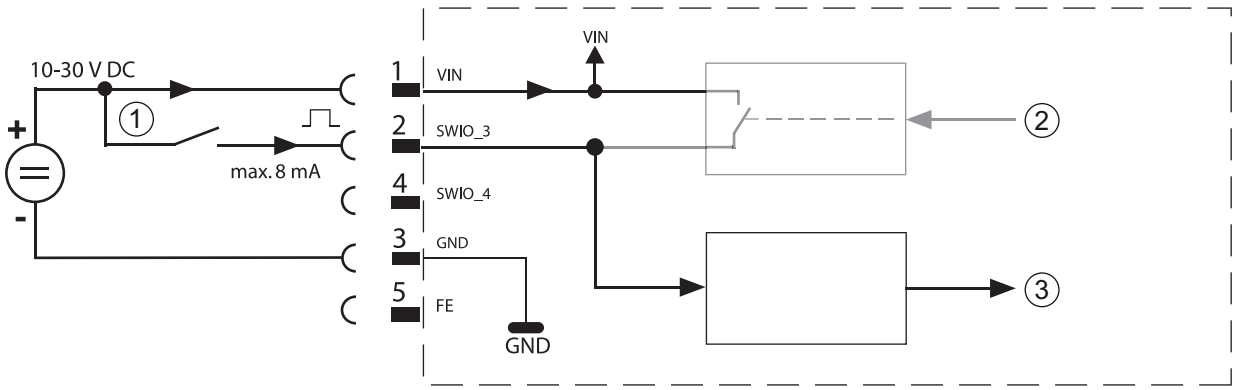

1 Switching input
2 Switching output from controller (deactivated)
3 Switching input to controller

Figure 7.3: Switching input connection diagram SWIO_3 and SWIO_4

If you use a sensor with a standard M 12 connector, please note the following:

↳ Pins 2 and 4 must not be operated as switching outputs if sensors which function as inputs are also connected to these pins.

If, for example, the inverted sensor output is connected to pin 2, and pin 2 of the bar code reader is, at the same time, configured as an output (and not as an input), the switching output malfunctions.

⚠ CAUTION
The maximum input current must not exceed 8 mA!

Function as switching output

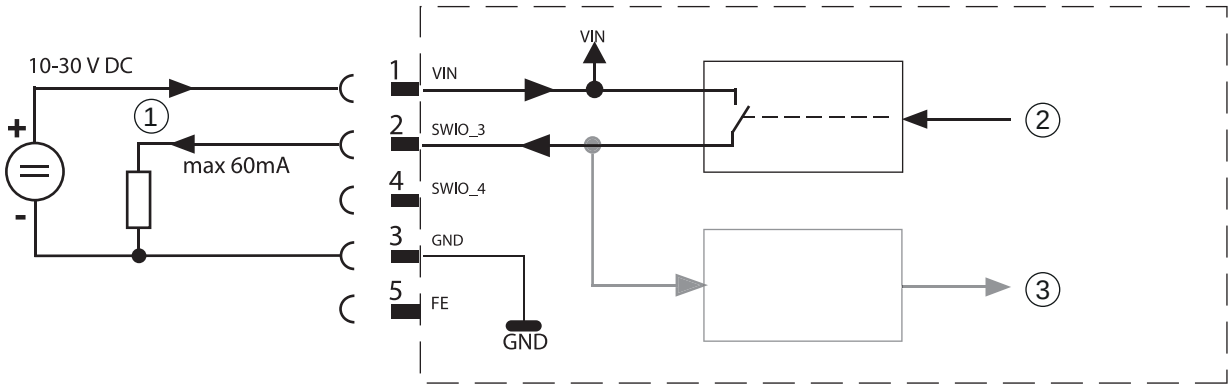

1 Switching output
2 Switching input from controller
3 Switching output to controller (deactivated)

Figure 7.4: Switching output connection diagram SWIO_3 / SWIO_4

NOTICE
Each configured switching output is short-circuit proof! Do not load the respective switching output of the device with more than 60 mA at +10 … +30 V DC in normal operation!

By default, the two switching inputs/outputs SWIO_3 and SWIO_4 are configured so that switching input SWIO_3 activates the reading gate and switching output SWIO_4 switches on “No Read”.

7.3 SERVICE – USB interface (type A)

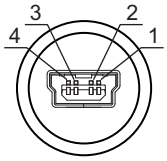

Figure 7.5: Service, USB, type A

Table 7.2: Pin assignments of SERVICE – USB interface

Pin	Name	Comment
1	VB	Positive supply voltage +5 V DC
2	D-	Data -
3	D+	Data +
4	GND	Ground

NOTICE

Maximum load of the +5 V DC supply voltage of the USB interface is 200 mA!

- Ensure adequate shielding.

  The entire interconnection cable must absolutely be shielded acc. to the USB specifications. Cable length must not exceed 3 m.
- Use the Leuze-specific USB service cable (see chapter 16 "Ordering information and accessories") for the connection and use a service PC to configure.

NOTICE

IP 65 is achieved only if the connectors and caps are screwed into place. Alternatively, a parameter memory in the form of a USB memory stick certified by Leuze electronic GmbH + Co. can be connected to the provided USB service interface. With this Leuze memory stick, degree of protection IP 65 is also ensured.

7.4 SW IN/OUT – Switching input/switching output

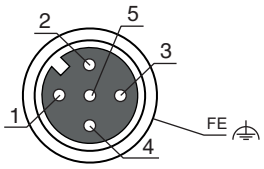

Figure 7.6: SW IN/OUT, M 12 socket (A-coded)

Table 7.3: Pin assignment SW IN/OUT

Pin	Name	Comment
1	VOUT	Voltage supply for sensor system (VOUT identical to VIN at PWR IN)
2	SWIO_1	Configurable switching input / output 1
3	GND	GND for the sensor system

Pin	Name	Comment
4	SWIO_2	Configurable switching input / output 2
5	FE	Functional earth
Thread	FE	Functional earth (housing)

The device is equipped with four freely programmable, opto-decoupled switching inputs and outputs SWIO_1 … SWIO_4.

The two switching inputs/outputs SWIO_1 and SWIO_2 are located on the SW IN/OUT M 12 socket. The other two (SWIO_3 and SWIO_4) of the four freely configurable switching inputs/outputs are located on the PWRsee chapter 7.4 M 12 connector.

The external wiring as switching input and switching output is described in the following. For the respective function assignment to the switching inputs/outputs see chapter 10.

Function as switching input

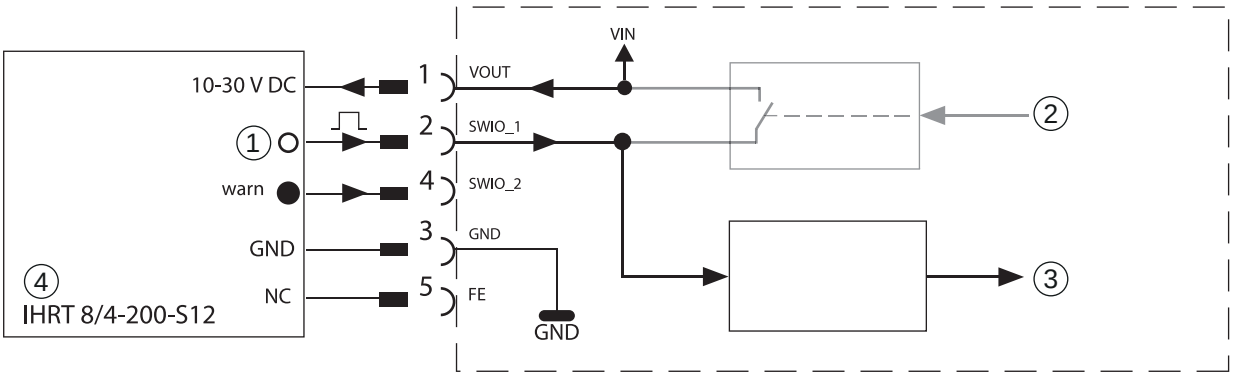

1 Output
2 Switching output from controller (deactivated)
3 Switching input to controller
4 Diffuse reflection sensor

Figure 7.7: Switching input connection diagram SWIO_1 and SWIO_2

NOTICE
If you use a sensor with a standard M 12 connector, please note the following: Pins 2 and 4 must not be operated as switching outputs if sensors which function as inputs are also connected to these pins. If, for example, the inverted sensor output is connected to pin 2, and pin 2 of the bar code reader is, at the same time, configured as an output (and not as an input), the switching output malfunctions.

NOTICE
The maximum input current must not exceed 8 mA!

Function as switching output

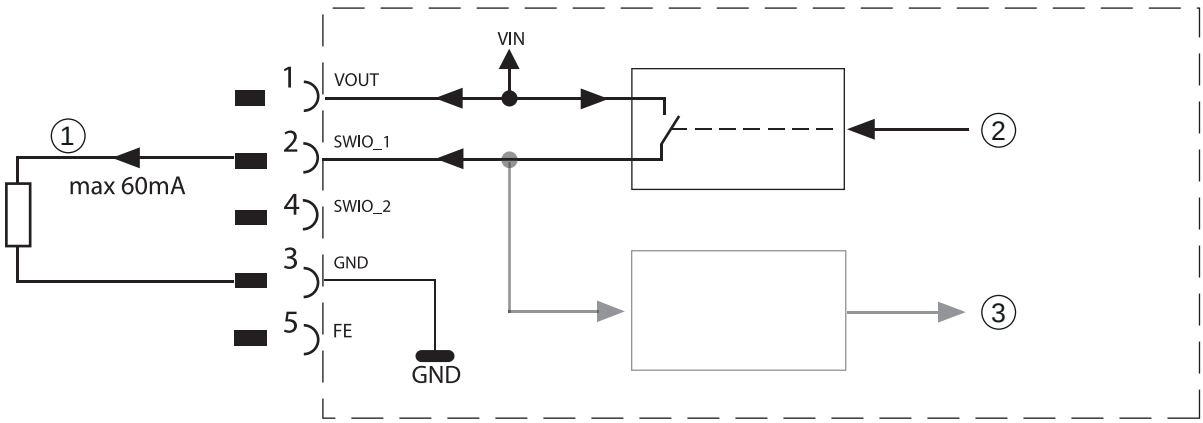

1 Switching output
2 Switching output from controller
3 Switching input to controller (deactivated)

Figure 7.8: Switching output connection diagram SWIO_1 / SWIO_2

NOTICE
Each configured switching output is short-circuit proof! Do not load the respective switching output of the device with more than 60 mA at +10 … +30 V DC in normal operation!

By default, the two switching inputs/outputs SWIO_1 and SWIO_2 are configured so that they function as switching inputs. Switching input SWIO_1 activates the start reading gate function and switching input SWIO_2 activates the reference code teach-in function.

The functions of the individual switching inputs/outputs are programmed via the display or via configuration in the webConfig tool under the Switching input or Switching output heading (see chapter 10 "Starting up the device - Configuration").

7.5 HOST / BUS IN

HOST / BUS IN for BCL 600i

The BCL 600i makes either the RS 232 or RS 422 interface available as host interface. This is selected via the display or the “webConfig” configuration software. The pin assignments change depending on the selected interface type (see table 7.4, see figure 7.10 and see figure 7.11).

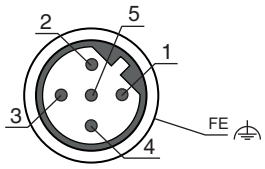

Figure 7.9: HOST/BUS IN, M 12 connector (B-coded)

Table 7.4: Pin assignment HOST / BUS IN for BCL 600i

Pin	Name	Comment
1	CTS / RX+	CTS signal (RS 232) / RX+ (RS 422)
2	TxD / Tx-	TXD signal (RS 232) / TX- (RS 422)
3	GND_H	Reference potential 0V for RS 232 / RS 422

Pin	Name	Comment
4	RTS/ Tx+	RTS signal (RS 232) / TX+ (RS 422)
5	RxD / Rx-	RxD signal (RS 232) / Rx- (RS 422)
Thread	FE	Functional earth (housing)

RS 232 interface

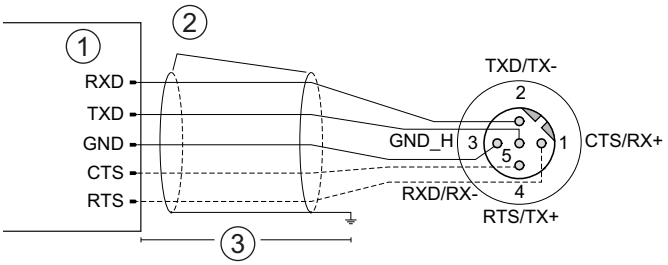

1 Host
2 Shield
3 Max. 10 m

Figure 7.10: Pin assignments - HOST / BUS IN as RS 232

NOTICE
Ensure adequate shielding. The entire interconnection cable must be shielded and earthed. The cables for RTS and CTS must only be connected if RTS/CTS hardware handshake is used.

RS 422 interface

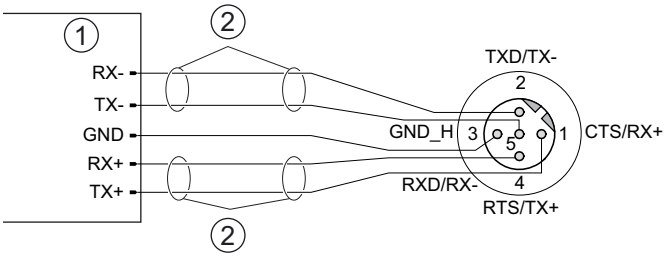

1 Host
2 Twisted pair

Figure 7.11: Pin assignments - HOST / BUS IN as RS 422

NOTICE
Ensure adequate shielding. The entire interconnection cable must be shielded and earthed. The signal lines must be stranded in pairs.

HOST / BUS IN for BCL 601i

The BCL 601i makes available an RS 485 as HOST / BUS IN interface for the connection to the host system. This interface is physically looped through to the BUS OUT RS 485 socket.

With its RS 485 interface, the BCL 601i is suitable for use in the Leuze multiNet plus scanner network.

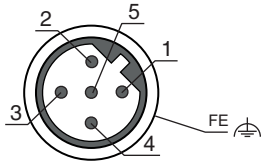

Figure 7.12: HOST/BUS IN, M 12 connector (B-coded)

Table 7.5: Pin assignment HOST / BUS IN for BCL 601i

Pin	Name	Comment
1	N.C.	Reserved
2	RS 485 B	RS 485 B - signal line
3	GND 485	Reference ground RS 485 - potential equalization
4	RS 485 A	RS 485 A - signal line
5	FE	Functional earth / shield
Thread	FE	Functional earth (housing)

7.6 BUS OUT

To set up the Leuze multiNet plus network with additional participants, the device makes available another interface in the form of an RS 485.

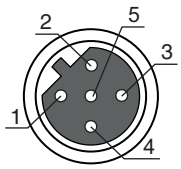

Figure 7.13: M 12 socket (B-coded)

Table 7.6: Pin assignment BUS OUT

Pin	Name	Comment
1	VCC485	+5VDC for bus termination
2	RS 485 B	RS 485 B - signal line
3	GND 485	Reference ground RS 485 - potential equalization
4	RS 485 A	RS 485 A - signal line
5	FE	Functional earth / shield
Thread	FE	Functional earth (housing)

NOTICE
Ensure adequate shielding. The entire interconnection cable must be shielded and earthed. The signal lines must be stranded in pairs.

Termination of the RS 485 interface on the master (BCL 600i)

The RS 485 interface must always be terminated externally on the master via a T-connector and a terminating resistor (see chapter 16 "Ordering information and accessories").

Termination of the RS 485 interface on the slave (BCL 600i)

On the last network participant, the Leuze multiNet plus network (RS 485 interface) should be terminated with a terminating resistor on the BUS OUT socket (see chapter 16 "Ordering information and accessories").

The BCL 600i can only participate as a slave in the Leuze multiNet plus on the BUS OUT socket and via an external M 12 T-connector (see chapter 7.8.3 and see figure).

Termination of the RS 485 interface (BCL 601i)

The device operates as slave in the Leuze multiNet plus network. On the last physical participant, the Leuze multiNet plus network (RS 485 interface) must be terminated with a terminating resistor (see chapter 16 "Ordering information and accessories"). This prevents reflections on the Leuze multiNet plus and improves the immunity to interference.

7.7 Cable lengths and shielding

↳ Observe the following maximum cable lengths and shielding types:

Table 7.7: Cable lengths and shielding

Connection	Interface	Max. cable length	Shielding
BCL – service	USB	3 m	Shielding absolutely necessary acc. to USB specifications
BCL – host	RS 232 RS 422 RS 485	10 m 1200 m 1200 m	shielding absolutely required RS 422/485 conductors, stranded in pairs
Network from the first BCL to the last BCL	RS 485	1200 m	shielding absolutely required RS 485 conductors, stranded in pairs
BCL – power supply unit		30 m	Not necessary
Switching input		10 m	Not necessary
Switching output		10 m	Not necessary

7.8 Leuze multiNet plus

The Leuze multiNet plus is optimized for fast transmission of scanner data to a primary host computer. The multiNet plus consists physically of a two-wire RS 485 interface through which the multiNet plus software protocol is controlled.

This makes wiring the network easy and inexpensive as slaves are looped through to one another in parallel.

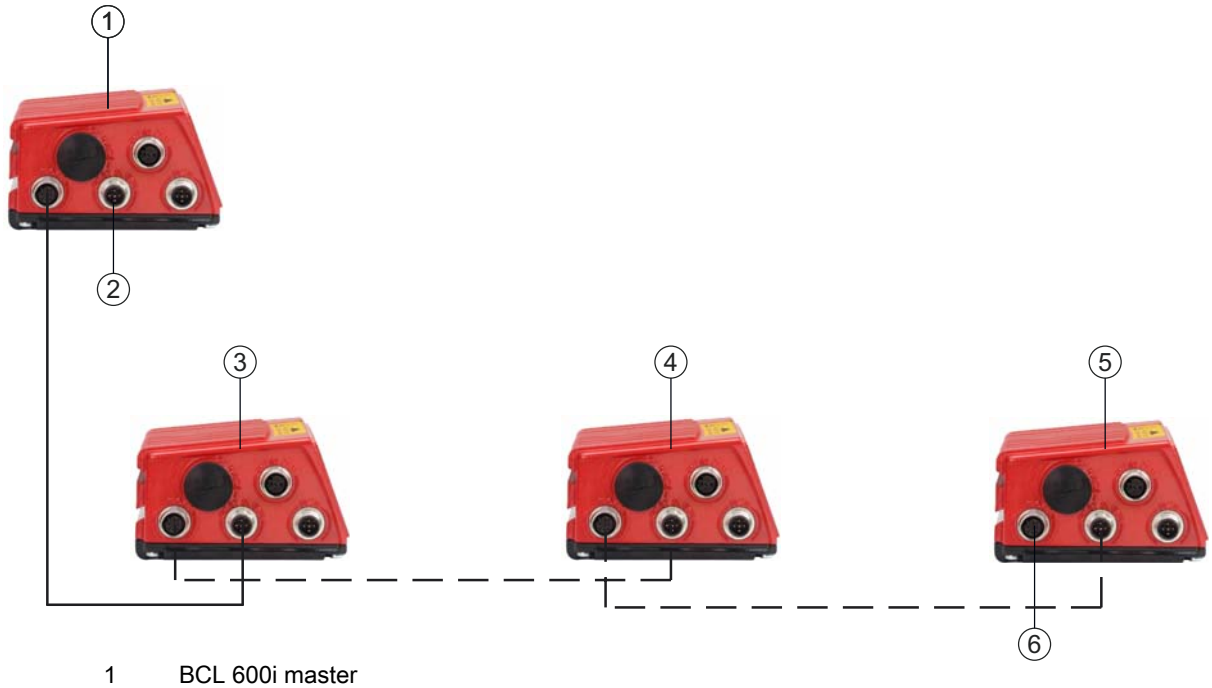

1	BCL 600i master
2	To PC/PLC
3	BCL 601i slave 1
4	BCL 601i slave 2
5	BCL 601i slave n
6	Terminating resistor on the last slave

Figure 7.14: Leuze multiNet plus system topology

With the aid of a BCL 600i network master, up to 31 bar code readers can be networked. For this purpose, each participating device is assigned the respective station address via the display and the control panel. The devices are networked by connecting the individual RS 485 interfaces in parallel.

In the Leuze multiNet plus network, the individual network devices sequentially transfer their data to the BCL 600i network master when requested.

The BCL 600i master then transmits the data of all network devices via its host interface (either an RS 232 or RS 422) to a superior PLC control or to a computer, i.e. it “collects” the scanner data in the network and transmits it to an interface on the host computer. This reduces interface costs (CPs) and time spent programming the software.

7.8.1 Wiring the multiNet plus

Leuze multiNet plus connection hints

Shielded, twisted pair conductors should be used for the Leuze multiNet plus. This allows a total network length of up to 1200 m.

Recommended network cable (e.g. LiYCY 2x0.2 mm²):

- Twisted pairs, shielded
- Cross section: min. 0.2 mm²
- Copper resistance <100 W/km

When wiring the network, note the following points:

- The RS 485A, RS 485B and GND cables are looped through in the network and must not in any case be misconnected; the Leuze multiNet plus network is otherwise not functional. It is recommended to wire through the GND of the RS 485 interface of the participants.
- Connect the shielding to the slaves on one side with FE.
- The maximum cable length in the network is 1200m.
- The (physically) last slave in the network should be equipped with a terminating resistor of 220 W between RS 485A and RS 485B. This prevents reflections on the multiNet plus and improves the immunity to interference.

Use the recommended connectors / sockets or the ready-made cables and terminating resistors (see chapter 16 "Ordering information and accessories").

7.8.2 The BCL 600i as network master

Master operation

The BCL 600i bar code readers are specially designed for master operation in a network. They manage the data of the slaves in multiNet plus and establish the connection to the superior host computer. Only a few parameters need to be set for master operation. Network commissioning can thus be performed in very little time (see chapter 10 "Starting up the device - Configuration").

Last slave address

Unlike the slaves, the display of the BCL 600i is not used to set the network address (the master always has the address 00), but the last slave address, i.e. the number of the most significant slave. This “informs” the BCL 600i master of the number of slaves operating on the network, without requiring you to call up the webConfig tool. If the network is expanded at a later time, you only need to change the number of slaves (last slave address) accordingly via the display.

Start-up / timeout messages

During the initialization phase, i.e. after switching on the operating voltage, the master searches for the set number of slaves. If a slave is found, the master generates a start-up message “S” for the respective address found, e.g. “04S” -> Slave with the address 04 has responded correctly.

If a slave is not found or does not respond, the master generates a “timeout” (response timeout) at this address.

The slave address and a “T” are output on the host interface. For example, “08T” means that no slave responded at the network address 08. The network is still operational with one or several reported “timeouts”, however, a slave, for which a timeout was generated, can no longer be addressed.

BCL 600i master mounting location

Ensure that the BCL 600i is mounted in an easily accessible and visible place in your system. Once the network has been put into operation, you can set (configure) every scanner in the network centrally via the USB service or host interface of the BCL 600i, without having to connect a PC/terminal to the individual read stations.

7.8.3 The BCL 600i as network slave

Alternatively, the bar code readers of the BCL 600i series can also operate as slave participants in the network mode. They now transmit data to the multiNet master (e.g. BCL 600i) only after the master prompts them to do so, and, using an external M 12 T-connector, they establish the continuing connection via the BUS OUT socket to the slaves which follow (order information see chapter 16.3 "Accessories"). The last network participant must be terminated with a terminating resistor.

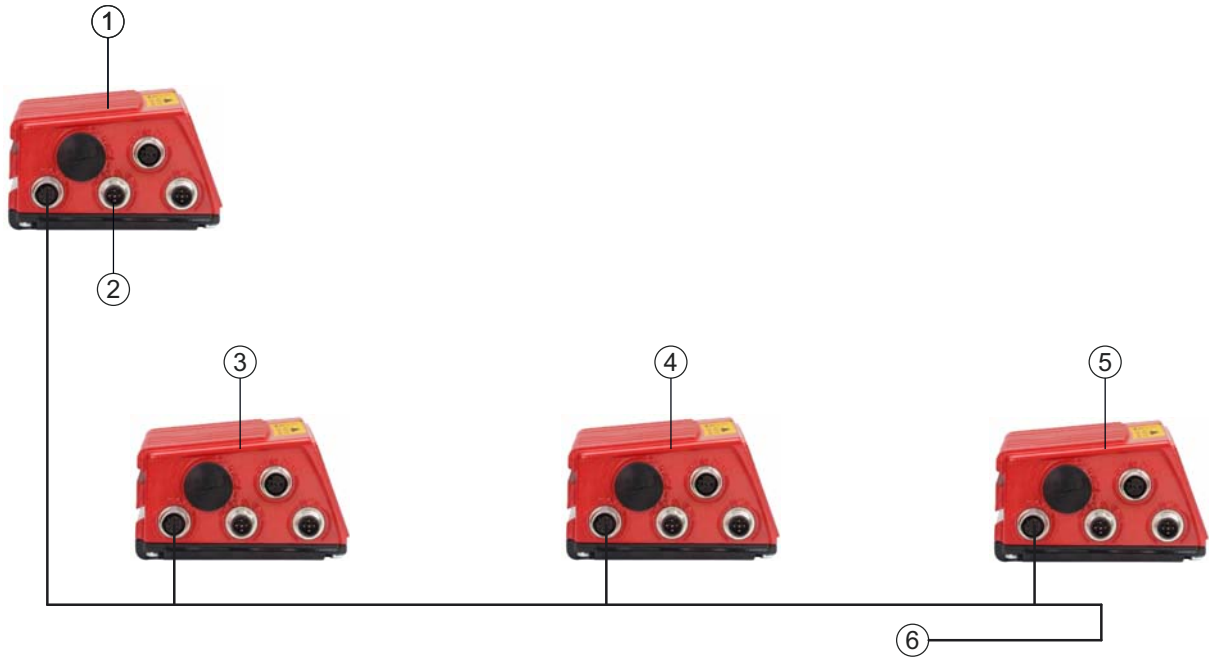

1	BCL 600i master
2	To PC/PLC
3	BCL 600i slave 1
4	BCL 600i slave 2
5	BCL 600i slave n
6	Terminating resistor on the last slave

Figure 7.15: Leuze multiNet plus system topology with BCL 600i as slave

Only a few parameters need to be set for slave operation. Network commissioning can thus be performed in very little time (see chapter 10 "Starting up the device - Configuration").

Slave address

The BCL 600i display has an important function for setting the network address. The network address, i.e. the corresponding station number of the slave, is set via the display. The address which is set must be > 0 since the master always has address 0 (Adr.00).

Each network device with an address > 0 is thereby automatically informed that it is a slave in the Leuze multiNet plus with this address and that it is initialized and queried by the network master. No other settings are necessary for commissioning in the Leuze multiNet plus.

Other settings

The parameters necessary for the reading task, such as the code types to be read and the number of digits of the code, must be set. This can be done via the display, as well as with the help of the webConfig tool.

7.8.4 The BCL 601i as network slave

The BCL 601i bar code readers are specially designed for slave operation in a network. They transmit data to the multiNet master only after the master prompts it to do so and establish the continuing connection via the BUS OUT socket to the slaves which follow. Only a few parameters need to be set for slave operation. Network commissioning can thus be performed in very little time (see chapter 10 "Starting up the device - Configuration").

The connection is performed as described above (see figure 7.14).

Slave address

With the BCL 601i, the network address, i.e. the corresponding station number of the slave, is set via the display. The address which is set must be > 0 since the master always has address 0 (Adr.00).

Each network device with an address > 0 is thereby automatically informed that it is a slave in the Leuze multiNet plus with this address and that it is initialized and queried by the network master. No other settings are necessary for commissioning in the Leuze multiNet plus.

Other settings

The parameters necessary for the reading task, such as the code types to be read and the number of digits of the code, must be set. This can be done via the display, as well as with the help of the webConfig tool.

8 Menu description

After voltage is applied to the bar code reader, a startup screen is displayed for several seconds. The display then shows the bar code reading window with all status information.

8.1 The main menus

Use the navigation buttons ▲▼ to move through the menu. Activate the desired selection with the enter button ↵.

Device information	This menu item contains detailed information on • Device type • Software version • Hardware version • Serial number
Network settings	• Display of the network settings
Bar code reading window	• Visualization of the read bar code information • Status overview of the switching inputs/outputs • Bar graphs for read quality of the current bar code. Further information see chapter "Indicators in the display".
Parameter	• Configuration of the bar code reader Further information see chapter 8.2 "Parameter menu".
Language selection	• Selection of the display language Further information see chapter 8.3 "Language selection menu".
Service	• Scanner diagnosis and status messages Further information see chapter 8.4 "Service menu".
Actions	• Various functions for scanner configuration and manual operation Further information see chapter 8.5 "Actions menu".

The display offers only limited configuration options. The configurable parameters are described in this chapter. Only the webConfig tool provides complete configuration options and is largely self-explanatory. For the use of webConfig tool see chapter 9. Notes on commissioning via the webConfig tool see chapter 10.

8.2 Parameter menu

Parameter handling

The Parameter handling submenu is used to lock and release the parameter input via the display and for resetting to default values.

Table 8.1: Parameter handling submenu

Level 3	Level 4	Level 5	Selection/configuration option Description	Standard
Parameter enable			OFF/ON The standard setting (**OFF**) prevents unintended parameter changes. If parameter enabling is activated (**ON**), parameters can be changed manually.	OFF
Parameters to default			By pressing the enter button after selecting **Parameters to default**, all parameters are reset to their standard settings without any further security prompts. In this case, English is selected as the display language.	

Decoder table

In the Decoder table submenu, 4 different code type definitions can be stored. Bar codes that have been read can only be decoded if they correspond to one of the definitions stored here.

Table 8.2: Decoder table submenu

Level 3	Level 4	Level 5	Selection/configuration option Description	Standard
Max. no. of labels			Value between 0 and 64 The value set here specifies the maximum number of labels that should be detected for each reading gate.	1
Decoder 1	Symbology (Code type)		No code Code 2/5 Interleaved Code 39 Code 32 Code UPC Code EAN Code 128 EAN Addendum Codabar Code 93 GS1 DataBar Omnidirectional GS1 DataBar Limited GS1 DataBar Expanded If **No code** is configured, the current and all subsequent decoders are deactivated.	Code 2/5i
	Number of digits	Interval mode	OFF/ON With the **ON** setting, the values in digits 1 and 2 define a range of character numbers that are to be read.	OFF
		Number of digits 1	0 to 64 characters First decodable number of characters or lower range limit.	10
		Number of digits 2	0 to 64 characters Second decodable number of characters or upper range limit.	0
		Number of digits 3	0 to 64 characters Third decodable number of characters.	0
		Number of digits 4	0 to 64 characters Fourth decodable number of characters.	0
		Number of digits 5	0 to 64 characters Fifth decodable number of characters.	0
	Reading reliability		Value from 2 to 100 Number or scans required to reliably detect a label.	4
	Check digit method		Standard No check Depending on the symbology (code type) selected for the decoder, further calculation algorithms can be selected here. Check digit method used for the decoding of the bar code that has been read. If **Standard** is set, the check digit method intended for the respective code type is used.	Standard
	Check digit transmission		Standard Not standard Specifies whether the check digit is transmitted. **Standard** means that the transmission matches the standard intended for the respective code type.	Standard

Level 3	Level 4	Level 5	Selection/configuration option Description	Standard
Decoder 2	Symbology		Same as **decoder 1**	Code 39
	Number of digits	Interval mode	OFF/ON	ON
		Number of digits 1	0 to 64 characters	4
		Number of digits 2	0 to 64 characters	30
		Number of digits 3	0 to 64 characters	0
		Number of digits 4	0 to 64 characters	0
		Number of digits 5	0 to 64 characters	0
	Reading reliability		Value from 2 to 100	4
	Check digit method		Same as **decoder 1**	Standard
	Check digit transmis-sion		Same as **decoder 1**	Standard
Decoder 3	Symbology		Same as **decoder 1**	Code 128
	Number of digits	Interval mode	OFF/ON	ON
		Number of digits 1	0 to 64 characters	4
		Number of digits 2	0 to 64 characters	63
		Number of digits 3	0 to 64 characters	0
		Number of digits 4	0 to 64 characters	0
		Number of digits 5	0 to 64 characters	0
	Reading reliability		Value from 2 to 100	4
	Check digit method		Same as **decoder 1**	Standard
	Check digit transmis-sion		Same as **decoder 1**	Standard
Decoder 4	Symbology		Same as **decoder 1**	Code UPC
	Number of digits	Interval mode	OFF/ON	OFF
		Number of digits 1	0 to 64 characters	8
		Number of digits 2	0 to 64 characters	0
		Number of digits 3	0 to 64 characters	0
		Number of digits 4	0 to 64 characters	0
		Number of digits 5	0 to 64 characters	0
	Reading reliability		Value from 2 to 100	4
	Check digit method		Same as **decoder 1**	Standard
	Check digit transmis-sion		Same as **decoder 1**	Standard

Digital SWIO

The Digital SWIO submenu is used to configure the 4 switching inputs/outputs of the device.

Table 8.3: Digital SWIO submenu

Level 3	Level 4	Level 5	Selection/configuration option Description	Standard
Sw. input/output 1	I/O mode		Input / Output / Passive Determines the function of switching input/output 1. In the case of passive, the connection is on 0 V if the **Inverted parameter is set to OFF**, and on +UB if the **Inverted parameter is set to ON**.	Input
	Switching input	Inverted	OFF / ON **OFF** = activation of the switching input function upon high level at the switching input **ON** = activation of the switching input function upon low level at the switching input	OFF
		Debounce time	Value from 0 to 1000 Time in milliseconds for which the input signal must be present and stable.	5
		Start-up delay	Value from 0 to 65535 Time in milliseconds between the end of the debounce time and activation of the function configured below.	0
		Pulse duration	Value from 0 to 65535 Minimum activation time in milliseconds for the function configured below.	0
		Switch-off delay	Value from 0 to 65535 Time in milliseconds for which the function configured below remains activated after the switching input signal is deactivated and the pulse duration has expired.	0
		Function	No BCL600i function Reading gate start/stop Reading gate stop -Reading gate start Teach reference code Autoconfig start/stop The function set here is carried out after the switching input is activated.	Reading gate start/stop

Level 3	Level 4	Level 5	Selection/configuration option Description	Standard
	Switching output	Inverted	OFF / ON **OFF** = activated switching output upon high level **ON** = activated switching output upon low level	OFF
		Signal delay	Value from 0 to 65535 Time in milliseconds between activation function and switching of the switching output.	0
		Pulse duration	Value from 0 to 65535 Switch-on time of the switching output in milliseconds. If the **Pulse duration** is set to 0, the switching output is switched on via the **Activation function** and switched off via the **Deactivation function**. If the **Pulse duration** is greater than 0, the **Deactivation function** has no effect.	400
		Activation function 1	No function Reading gate start Reading gate end Positive reference code comparison 1 Negative reference code comparison 1 Valid read result Invalid read result Device ready Device not ready Data transmission active Data transmission not active AutoCont. good quality AutoCont. bad quality Reflector detected Reflector not detected External event, pos. edge External event, neg. edge Device active Device standby No device error Device error Positive reference code comparison 2 Negative reference code comparison 2 The function set here specifies which event activates the switching output.	No function
		Deactivation function 1	See Activation function 1 for selection options The function set here specifies the event that deactivates the switching output.	No function
Sw. input/output 2	I/O mode		Input / Output / Passive	Output
	Switching input	Inverted	OFF / ON	OFF
		Debounce time	Value from 0 to 1000	5
		Start-up delay	Value from 0 to 65535	0
		Pulse duration	Value from 0 to 65535	0
		Switch-off delay	Value from 0 to 65535	0
		Function	See switching input/output 1	No function
	Switching output	Inverted	OFF / ON	OFF
		Signal delay	Value from 0 to 65535	0
		Pulse duration	Value from 0 to 65535	400
		Activation function 2	See switching input/output 1	Valid read result
		Deactivation function 2	See switching input/output 1	Reading gate start

Level 3	Level 4	Level 5	Selection/configuration option Description	Standard
Sw. input/output 3	I/O mode		Input / Output / Passive	Input
	Switching input	Inverted	OFF / ON	OFF
		Debounce time	Value from 0 to 1000	5
		Start-up delay	Value from 0 to 65535	0
		Pulse duration	Value from 0 to 65535	0
		Switch-off delay	Value from 0 to 65535	0
		Function	See switching input/output 1	Reading gate start/stop
	Switching output	Inverted	OFF / ON	OFF
		Signal delay	Value from 0 to 65535	0
		Pulse duration	Value from 0 to 65535	400
		Activation function 3	See switching input/output 1	No function
		Deactivation function 3	See switching input/output 1	No function
Sw. input/output 4	I/O mode		Input / Output / Passive	Output
	Switching input	Inverted	OFF / ON	OFF
		Debounce time	Value from 0 to 1000	5
		Start-up delay	Value from 0 to 65535	0
		Pulse duration	Value from 0 to 65535	0
		Switch-off delay	Value from 0 to 65535	0
		Function	See switching input/output 1	No function
	Switching output	Inverted	OFF / ON	OFF
		Signal delay	Value from 0 to 65535	0
		Pulse duration	Value from 0 to 65535	400
		Activation function 4	See switching input/output 1	Invalid read result
		Deactivation function 4	See switching input/output 1	Reading gate start

Table 8.4: Com submenu

Level 3	Level 4	Level 5	Selection/configuration option Description	Standard
Operating mode			Stand-alone device Network Master Network Slave	Stand-alone device
HOST / BUS IN	Protocol type		No protocol Framing protocol Framing protocol with acknowledgment muliNet Slave multiNet Master	Framing protocol
	Interface	Baud rate	110 ... 115200 Baud	9600

Level 3	Level 4	Level 5	Selection/configuration option Description	Standard
		Data format	7N1 7N2 7E1 7E2 7O1 7O2 8N1 8N2 8E1 8E2 8O1 8O2 9N1 The data format is specified in: Number of bits (7,8,9) Parity (N=none, E=even, O=odd) Number of stop bits (1,2)	8N1
		Handshake	None RTS CTS XON XOFF	None
		Standard	RS232 RS422 RS485	RS232
	Framing protocol[a)]	RX	Prefix 1 … 3[b)] Postfix 1 ... 3 BCC mode Control character definition for transmit data	STX, NULL, NULL CR, LF, NULL None
		TX	Prefix 1 … 3 Postfix 1 ... 3 BCC mode Control character definition for received data	STX, NULL, NULL CR, LF, NULL None
		Address format	No address Binary address ASCII address Automatic address	No address
		Address	Value from 0 to 31	0
BUS OUT	multiNet Master	Maximum number of slaves	Value from 0 to 31 If the BCL 600i was configured as network master in the Operating mode menu item, the maximum number of slaves managed by the master must be entered here.	1
	multiNet Slave	Slave address	Value from 0 to 31 If the BCL 600i was configured as network slave in the Operating mode menu item, the slave address must be entered here.	1

a) If the device is configured as stand-alone device or network master, the framing protocol defines how data is exchanged between the BCL 600i and the host. The framing protocol is a character-based protocol for the transmission of ASCII characters. It groups the characters to be transmitted into a datablock and frames the block with control characters. Various block checking methods are optionally available for protecting the integrity of the data.

b) Enter the decimal value of the desired ASCII character here. For example, enter "13" for the "CR" character (Carriage Return) (see chapter 18.1).

8.3 Language selection menu

Currently, there are 6 display languages available:

- German
- English
- Spanish
- French
- Italian
- Chinese

The display language and the language of the webConfig user interface are synchronized. The setting in the display affects the webConfig tool and vice versa.

8.4 Service menu

Diagnostics

This menu item is used exclusively for service purposes by Leuze electronic.

Status messages

This menu item is used exclusively for service purposes by Leuze electronic.

8.5 Actions menu

Start decoding

Here, you can perform a single reading via the display.

↳ Activate the single reading with the enter button ↵ and hold a bar code in the reading field of the device.

The laser beam is switched on and the following display appears:

zzzzzzzzz

Once the bar code is detected, the laser beam is switched off again. The read result zzzzzzzzz is shown directly in the display for about 1 s. After that, the Actions menu is displayed again.

Start alignment

The alignment function makes it easy to align the device by optically displaying the read quality.

↳ Activate the alignment function with the enter button ↵ and hold a bar code in the reading field of the device.

At first, the laser beam is switched on continuously, enabling you to position the bar code securely in the reading field. Once the bar code is read, the laser beam is switched off briefly and the following display appears:

xx zzzzzz

xx	Read quality in % (scans with info)
zzzzzz	Contents of the decoded bar code

Once the bar code has been detected, the laser beam starts to flash.

The flash frequency provides visual information on the read quality. The faster the laser beam flashes, the higher the read quality.

Start auto-setup

The auto-setup function provides an easy option for configuring the code type and number of digits of Decoder 1.

↳ Use the enter button ↵ to activate the auto-setup function and hold an unknown bar code in the reading beam of the device.

The following display appears:

xx yy zzzzzz

The following information is displayed:

xx		Code type of the detected code (sets the code type of Decoder 1)
	01	2/5 Interleaved
	02	Code 39
	06	UPC (A, E)
	07	EAN

08	Code 128, EAN 128
10	EAN Addendum
11	Codabar
yy	Number of digits of the detected code (sets the number of digits of Decoder 1)
zzzzzz	Contents of the decoded label. A appears if the label was not correctly read.

Start teach-in

The teach-in function can be used to conveniently read reference code 1.

- Use the enter button to activate the teach-in function and hold a bar code which contains the content that you wish to store as the reference code in the reading beam of the device.

The following display appears:

RC13xxzzzzzz

RC13	Means that **R**eference**C**ode number 1 is stored in RAM. This is always output
xx	Defined code type (see auto-setup)
z	Defined code information (1 … 63 characters)

8.6 Operation

Shown here is an example describing important operating procedures in detail.

Parameter enable

During normal operation parameters can only be viewed. If parameters need to be changed, the ON menu item in the Parameter enabling menu must be activated.

Use the navigation buttons to move through the menu. Activate the desired selection with the enter button.

- In the Parameter menu, select **Parameter handling**.
- Press the enter button to enter the menu.
- Select the **Parameter enable** menu item.
- Press the enter button to enter the menu.
- Select the **ON** menu item.
- Press the enter button to enter the menu.
- The PWR LED lights up red. You can now set individual parameters via the display.
- Press the Escape button twice to return to the main menu.

Network configuration

For information on network configuration see chapter 10 "Starting up the device - Configuration".

9 Commissioning – Leuze electronic webConfig tool

With the **Leuze webConfig tool**, an operating-system independent, web-technology based, graphical user interface is available for configuring bar code readers of the BCL 600i series.

Through the use of HTTP as communication protocol and by using only standard technologies on the client side (HTML, JavaScript and AJAX), which are supported by all commonly used, modern browsers (e.g. Mozilla Firefox beginning with Version 4, Internet Explorer beginning with Version 8.0 and Microsoft Edge), it is possible to operate the Leuze webConfig tool on any internet-ready PC.

9.1 Connecting the service USB interface

The connection to the SERVICE USB interface of the device is established via the PC-side USB interface using a special USB cable with 2 type A/A plugs.

9.2 Installation

9.2.1 System requirements

Operating system:
Windows 2000
Windows XP (Home Edition, Professional)
Windows Vista
Windows 7
Windows 8
Windows 10

Computer:
PC with USB interface version 1.1 or higher

Graphics card:
Min. 1024 x 768 pixels or higher resolution

Required disk capacity:
Approx. 10 MB

It is recommended to update the operating system regularly and to install the current Windows service packs.

9.2.2 Installing the USB driver

In order for the device to be automatically detected by the connected PC, the USB driver must be installed once on your PC. To do this, you must have administrator privileges.

Please proceed according to the following steps.

- Start your PC with administrator privileges and log on.
- Load the CD included in the delivery contents of your device in the CD drive and start the setup.exe program.
- Alternatively, you can also download the setup program from the internet at www.leuze.com.
- Follow the instructions provided by the setup program.

Upon successful installation of the USB driver, an icon automatically appears on the desktop.

To check: In the Windows device manager, a device called “Leuze electronic, USB Remote NDIS Network Device” appears under the “Network adapter” device class following successful USB registration.

If the installation failed, contact your network administrator: The settings of the firewall used may need to be adjusted.

9.3 Starting the webConfig tool

To start the webConfig tool, click the icon located on the desktop. Make certain that the device is connected to the PC via the USB interface and that voltage is connected.

Or alternatively: Open a browser on your PC and enter the following address: 192.168.61.100.

This is the default Leuze service address for communication with bar code readers of the BCL 600i series.

In both cases, the following start page appears on your PC.

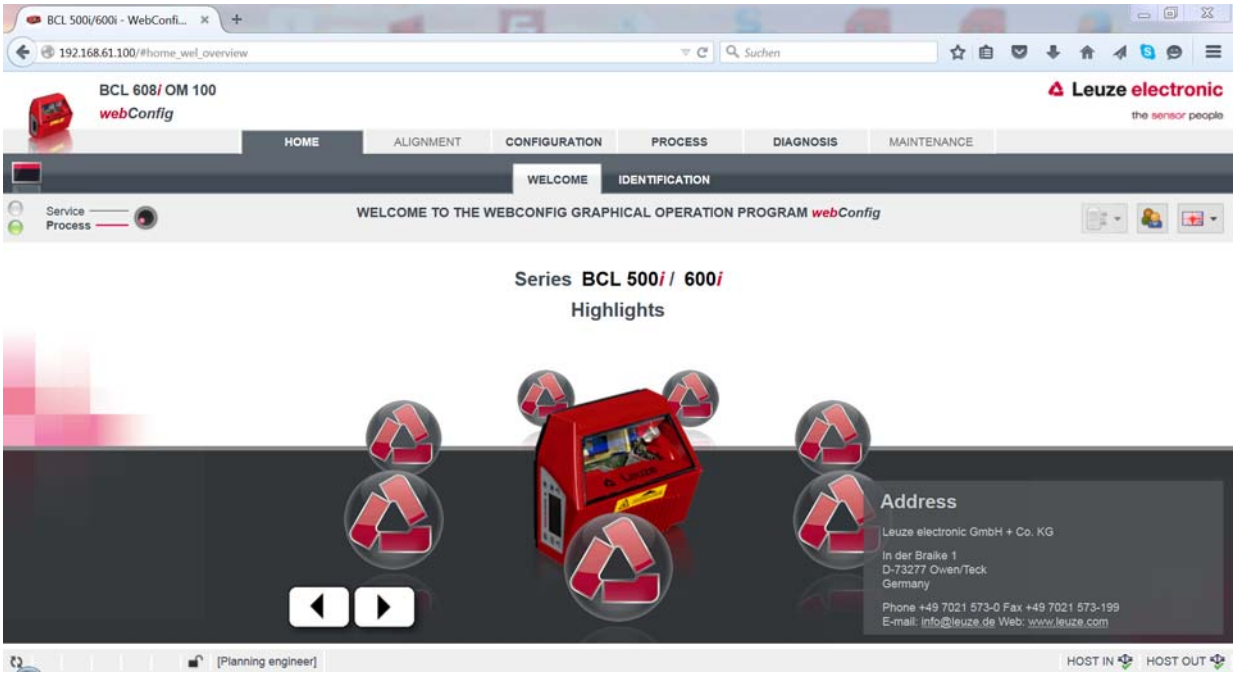

Figure 9.1: The start page of the webConfig tool

The webConfig tool is completely contained in the firmware of the device. Depending on firmware version, the start page may vary from that shown above.

The individual parameters are – where useful – graphically displayed in order to better illustrate the meaning of the what are often perceived as abstract parameters.

The result is an easy-to-use and practically-oriented user interface!

9.4 Short description of the webConfig tool

The webConfig tool has five main menus:

- Home
  With information on the connected device as well as on installation. This information corresponds to the information in this handbook.
- Alignment
  For manually starting read processes and for aligning the bar code reader. The results of the read processes are displayed immediately. As a result, this menu item can be used to determine the optimum installation location.
- Configuration
  For adjusting decoding, for data formatting and output, switching inputs/outputs, communication parameters and interfaces, etc. …
- Diagnostics
  For event logging of warnings and errors.
- Maintenance
  For updating the firmware.

The user interface of the webConfig tool is largely self-explanatory.

9.5 Module overview in the Configuration menu

The adjustable parameters of the device are clustered in modules in the Configuration menu.

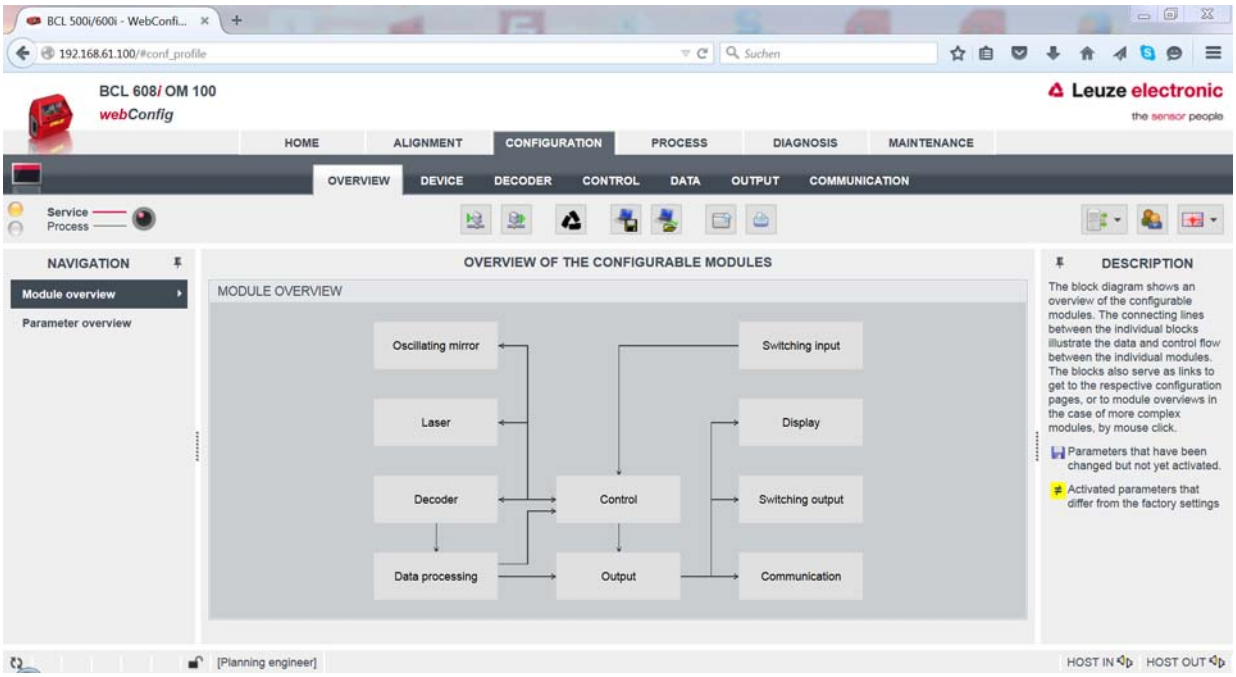

Figure 9.2: Module overview in the webConfig tool

The webConfig tool is completely contained in the firmware of the device. Depending on firmware version, the module overview may vary from that shown above.

The individual modules and their relationships to one another are graphically displayed in the module overview. The display is context sensitive, i.e. click a module to directly access the corresponding submenu.

An overview of the modules:

- Decoder
  Definition of code types, code-type features and number of digits of the labels that are to be decoded
- Data processing
  Filtering and processing of the decoded data
- Output
  Sorting of the processed data and comparison with reference codes
- Communication
  Formatting of the data for output via the communication interfaces
- Control
  Activation/deactivation of decoding
- Switching input
  Activation/deactivation of read processes
- Switching output
  Definition of events which activate/deactivate the switching output
- Display
  Formatting of the data for output on the display
- Oscillating mirror (optional)
  Setting oscillating mirror parameters

10 Starting up the device - Configuration

This chapter describes basic configuration steps which you can carry out either via the webConfig tool or the display.

Via the webConfig tool

The most convenient way to configure the device is via the webConfig tool. Only the webConfig tool gives you access to all settings of the device. To use the webConfig tool, you need to establish a USB connection between the device and a PC/laptop.

Notes on use see chapter 9 "Commissioning – Leuze electronic webConfig tool".

Via display

The display offers basic configuration options for the device. Configuration via the display is appropriate if you want to configure simple reading tasks and you cannot or do not want to set up a USB connection between the device and a PC/laptop.

Notes on use see chapter 3.5.2 "Status display and operation".

10.1 Measures to be performed prior to the initial commissioning

- Before commissioning, familiarize yourself with the operation and configuration of the device.
- Before connecting the supply voltage, recheck all connections and ensure that they have been properly made.
- Check the applied voltage. It must be in the range between +10V … 30 V DC.

Connecting functional earth FE

- Ensure that the functional earth (FE) is connected correctly.

NOTICE
Unimpaired operation is only guaranteed when the functional earth is connected properly. All electrical disturbances (EMC couplings) are discharged via the functional earth connection.

10.2 Starting the device

- Connect the +10 … 30VDC supply voltage (typ. +24VDC); the device starts up and the bar code reading window appears on the display.

By default, parameter enabling is deactivated and you cannot change any settings. If you wish to carry out the configuration via the display, you must activate parameter enabling (see chapter 8.6 "Operation", Parameter enable).

10.3 BCL 600i operation

- As a first step, you need to set the communication parameters of the device. The BCL 600i can be operated as stand-alone device, multiNet plus master or multiNet plus slave.

You can make the necessary settings via the display or via the webConfig tool. The settings made by means of the webConfig tool are described here only briefly.

10.3.1 Operation as stand-alone device

Operation of the BCL 600i is factory-set to stand-alone device.

If you want to operate the BCL 600i as stand-alone device, you can skip the following points. For further settings see chapter 10.5.

10.3.2 Selecting the operating mode

To operate the BCL 600i as multiNet master or slave, you must set the corresponding operating mode.

In the webConfig tool

↳ In the main menu, select Configuration -> Communication -> Overview.

Or alternatively in the display

Use the navigation buttons ▲▼ to move through the menu. Activate the desired selection with the enter button ↵.

↳ In the main menu, select the **Parameter menu**.

↳ Select the **Com** menu item.

↳ Press the enter button to enter the menu.

↳ Select the **Operating mode** menu item.

↳ Press the enter button to enter the menu.

↳ Select the desired menu item: **Stand-alone device**, **Network master** or **Network slave**.

↳ Press the enter button to activate the operating mode.

webConfig tool or display

↳ Set one of the following three operating modes:

- Stand-alone device:
  BCL 600i in stand-alone operation (see chapter 10.5)
- Network Master:
  BCL 600i as master in multiNet plus. Further settings are required for master operation (see chapter 10.3.3).
- Network Slave:
  BCL 600i as slave in multiNet plus. Further settings are required for slave operation. The configuration of the BCL 600i as multiNet slave corresponds to the configuration of the BCL 601i (see chapter 10.4).

10.3.3 Operation as multiNet plus master

For operation as multiNet plus master, you must inform the BCL 600i of the maximum number of slaves to be managed. This is done via the Maximum number of slaves parameter.

Set the Maximum number of slaves parameter to the desired value:

Via webConfig:

↳ Configuration -> Communication -> BUS OUT -> Protocol

Or, alternatively, via the display:

BCL 600i as slave in multiNet plus. Further settings are required for slave operation. The configuration of the BCL 600i as multiNet slave corresponds to the configuration of the BCL 601i (see chapter 10.4).

↳ In the main menu, select the **Parameter menu**.

↳ Select the **Com** menu item.

↳ Press the enter button to enter the menu.

↳ Select the **BUS OUT** menu item.

↳ Press the enter button to enter the menu.

↳ Select the **multiNet master** menu item.

↳ Press the enter button to enter the menu.

↳ Press the enter button to enter the menu for setting the maximum number of slaves.

↳ Displayed in the following screen is the preset number 1, which you can now change.

↳ Select the desired number of slaves. An accidental, incorrect entry can be corrected by selecting <-| and then pressing the enter button.

↳ Select **Save**.

↳ Press the enter button in order to save the set number of slaves.

Furthermore, you must configure the BCL 600i in such a way that it can communicate with the superior host:

Interface standard and communication parameters of the host interface:
Select the desired interface standard (RS 232 / RS 422) and set the associated parameters:

Via webConfig:

↳ Configuration -> Communication -> HOST/BUS IN -> Data transmission

Or, alternatively, via the display:

↳ In the main menu, select the **Parameter menu**.

↳ Select the **Com** menu item.

↳ Press the enter button to enter the menu.

↳ Select the **HOST/BUS IN** menu item.

↳ Press the enter button to enter the menu.

↳ Select the **Interface** menu item.

↳ Press the enter button to enter the menu.

↳ Press the enter button to enter the menu for setting the interface parameters.

↳ Displayed in the following screen is the preset number 1, which you can now change.

↳ Successively select the parameters available and set the values you require. For a description of the various configuration options see table 8.4.

Communication protocol of the host interface:
Select the desired protocol and set the associated parameters:

Via webConfig:
First select:

↳ Configuration -> Communication-> HOST/BUS IN -> Protocol

Then select:

↳ Configuration -> Communication-> HOST/BUS IN -> Framing protocol

Or, alternatively, via the display:
First select:

↳ Parameter -> Com -> HOST/BUS IN -> Protocol type

Then select:

↳ Parameter -> Com -> HOST/BUS IN -> Framing protocol

Proceed with the device configuration (see chapter 10.5).

10.4 BCL 601i operation

The communication parameters of the HOST/BUS IN and BUS OUT interfaces are permanently set for operation of the device as multiNet plus slave. To enable communication of the BCL 600i/BCL 601i with the multiNet plus master, you only need to set the device address.

The BCL 601i always automatically starts as slave participant in multiNet plus. The default address is 1.

The Leuze multiNet plus permits an address range from 0 to 31. Address 31 must not be used for data communication. It may only be used temporarily for commissioning.
Set the parameter of the slave address to a value > 0 and < 31. Start with address 01 for the first slave and assign the following addresses in ascending order and without gaps.

Via webConfig:

↳ Configuration -> Communication -> BUS OUT -> Protocol

Or, alternatively, via the display:

↳ In the main menu, select the **Parameter menu**.

- Select the **Com** menu item.
- Press the enter button to enter the menu.
- Select the **BUS OUT** menu item.
- Press the enter button to enter the menu.
- Select the **multiNet Slave** menu item.
- Press the enter button to enter the menu.
- Press the enter button to enter the menu for setting the slave address.
- Displayed in the following screen is the preset slave address 1, which you can now change.
- Select the desired number of slaves. An accidental, incorrect entry can be corrected by selecting <-| and then pressing the enter button.
- Select **Save**.
- Press the enter button in order to save the set number of slaves.

Permissible values for the network address in the Leuze multiNet plus are 0 … 31. Make certain that a different address is assigned to each multiNet plus participant.

From the hardware address (device address > 0), the BCL 601i detects that networking is required. It automatically switches to the Leuze multiNet plus network and waits for initialization by the master.

10.5 Further settings

After the basic configuration of the operating mode and the communication parameters, you need to carry out further settings:

- Decoding and processing the read data
- Control of the decoding
- Control of the switching outputs

10.5.1 Decoding and processing the read data

The device offers the following possibilities:

- Setting the number of labels to be decoded for each reading gate (0 … 64). This is done via the Max. no. of labels parameter.
- Definition of up to 8 different code types (4 different types if configured via the display). Labels that match one of the defined code types are decoded. Further parameters can be set for each code type:
  - Code type (symbology)
  - Number of digits: either up to 5 different numbers of digits (e.g., 10, 12, 16, 20, 24), or a range (Interval mode) and up to three additional numbers of digits (e.g., 2 … 10, 12, 16, 26)
  - Reading reliability: the set value specifies how many times a label must be read and decoded with the same result before the result is accepted as valid.
  - Activation of the code reconstruction technology (CRT, in the webConfig tool only)
  - Additional code type specific settings (in the webConfig tool only)
  - Check digit method used for decoding as well as the type of check digit transmission for the output of the read result. The two possibilities for the latter are Standard (corresponds to the standard for the selected code type/symbology) and not Standard.

- Define at least one code type with the desired settings.

  In the webConfig tool: Configuration -> Decoder

  Or alternatively in the display: Parameter -> Decoder table

Data processing via the webConfig tool

In the Data and Output submenus of the Configuration main menu, the webConfig tool provides extensive data processing options to adapt the functionality of the device to the specific reading task:

- Data filtering and segmentation in the Data submenu:
  - Data filtering according to characteristics for handling identical bar code information
  - Data segmentation for differentiating between identifier and content of the read data
  - Data filtering according to content and/or identifier in order to suppress the output of bar codes with specific content/identifiers
  - Completeness inspection of the read data
- Sorting and formatting the output data in the Output submenu:
  - Configuration of up to 3 different sorting criteria. Sorting by physical data and content of the read bar codes.
  - Formatting of the data output for the HOST.
  - Formatting of the data output for the display.

10.5.2 Control of the decoding

In general, decoding is controlled via one or more of the configurable switching inputs/outputs. For this purpose, the respective connection to the SW IN/OUT and POWER interfaces must be configured as a switching input.

Via a switching input, you can:

- Start decoding
- Stop decoding
- Start decoding and then stop decoding after a configurable time period
- Read a reference code
- Start the automatic code type configuration (AutoConfig)

↳ Connect the required control devices (photoelectric sensor, proximity switch, etc.) to the device (see chapter 7).

↳ Configure the connected switching inputs according to your requirements. To do this, first set the I/O mode to Input and then configure the switching behavior.

In webConfig: Configuration -> Device -> Switching inputs/outputs

Or alternatively in the display: Parameter -> Digital SWIO -> Switching input/output 1-4

Alternatively, one can also activate decoding via the online command + and deactivate it via the online command ’-’. For further information on the online commands, see chapter 11 "Online commands".

Advanced decoder control in the webConfig tool

The webConfig tool provides advanced functions, in particular for deactivating decoding. These may be accessed via the Control submenu of the Configuration main menu. You can:

- Activate decoding automatically (delayed)
- Stop decoding after a maximum reading gate time
- Stop decoding via the completeness mode, if:
  - the maximum number of bar codes to be decoded has been decoded
  - a positive reference code comparison has taken place.

10.5.3 Control of the switching outputs

By using the switching inputs/outputs of the device, external event-controlled functions can be implemented without assistance from the superior process control. For this purpose, the respective connection at the SW IN/OUT and POWER interfaces must be configured as a switching output.

A switching output can be activated:

- At the start/end of the reading gate
- Depending on the read result:
  - Reference code comparison positive/negative
  - Read result valid/invalid
- Depending on the state of the device:
  - Ready/not ready
  - Data transmission active/not active
  - Active/standby
  - Error/no error
- etc.

↳ Connect the required switching outputs (see chapter 7).

↳ Configure the connected switching outputs according to your requirements. To do this, first set the I/O mode to Output and then configure the switching behavior.

In webConfig: Configuration -> Device -> Switching inputs/outputs

Or alternatively in the display: Parameter -> Digital SWIO -> Switching input/output 1-4

10.6 Transmitting configuration data

Instead of going through the tedious task of configuring every parameter of the device individually, you can also conveniently transfer configuration data.

In general, there are two possibilities for transferring configuration data between two bar code readers:

- Storage in a file and transfer using the webConfig tool
- Using the external parameter memory

10.6.1 Via the webConfig tool

With the webConfig tool, you can store entire configurations of the device on data carriers and transfer them from these to the device.

This storage of configuration data is especially useful if you want to store basic configurations which will require only minor changes.

In the webConfig tool, you store the configuration data via the buttons in the upper part of the middle window of all submenus of the Configuration main menu.

10.6.2 With the external parameter memory

The use of the external parameter memory permits the easy replacement of a defective device on site.

This requires an external parameter memory to be installed permanently to the USB connection of the device.

The device stores a copy of the current configuration in the external parameter memory. This copy is immediately updated when the configuration is changed via the display or by a superior host system (PC/PLC) via online commands.

11 Online commands

Online commands can be used to send commands directly to the device for control and configuration.
For this purpose, the device must be connected to a host- or service computer via the interface. The commands described can be sent either via the host or the service interface.

Online commands

With the commands, you can:

- control/decode.
- read/write/copy parameters.
- carry out an automatic configuration.
- teach-in/set reference codes.
- call up error messages.
- call up statistical device information.
- carry out a software reset in order to reinitialize the device.

Syntax

Online commands consist of one or two ASCII characters followed by command parameters. No separation characters may be entered between the command and the command parameter(s). Both small and capitalized letters can be used.
Example:

Command CA:	autoConfig function
Parameter +:	Activation
Transmitted is:	CA+

Most online commands are acknowledged by the device and any requested data returned. For commands that are not acknowledged, command execution can be observed or monitored directly on the device.

11.1 General online commands

Software version number

Command	V
Description	Requests device version information
Parameter	No
Acknowledgment	BCL 600i SM 100 V 1.3.8 2008-02-15 The first line contains the device type, followed by the device version number and version date. (The data which is actually displayed may vary from the values given here.)

This command returns the major release number of the software packet. This major release number also appears on the display during start-up.

This command can be used to check whether the connected host or service computer is properly connected and configured. If you do not receive an acknowledgment, please check interface connections, protocol and service switches.

Software reset

Command	H
Description	Carries out a software reset. The device is restarted and reinitialized, leaving it in the same state as when the supply voltage is switched on
Parameter	No
Acknowledgment	S (start signal)

Code recognition

Command	CC
Description	Detects an unknown bar code and outputs number of digits, code type, and code information to the interface, without storing the bar code in the parameter memory.
Parameter	No
Acknowledgment	xx yy zzzzzz xx: Number of digits of the read code yy: Code type of the read code 01 2/5 Interleaved 02 Code 39 06 UPC (A, E) 07 EAN 08 Code 128, EAN 128 10 EAN Addendum 11 Codabar zzzzzz Contents of the decoded label. A ↑ appears if the label was not correctly read

autoConfig

Command	CA
Description	Activates or deactivates the autoConfig function. Certain label reading parameters are programmed automatically in the setup by the labels which the device reads while the autoConfig function is active.
Parameter	+ Activates autoConfig / Rejects the last code read - Deactivates autoConfig and stores the decoded data in the current parameter set

Command	CA
Acknowledgment	CSx x Status 0 Valid CA command 1 Invalid command 2 autoConfig could not be activated 3 autoConfig could not be deactivated 4 Result could not be deleted
Description	xx yy zzzzzz xx Number of digits of the read code yy Code type of the read code 01 2/5 Interleaved 02 Code 39 06 UPC (A, E) 07 EAN 08 Code 128, EAN 128 10 EAN Addendum 11 Codabar zzzzzz Contents of the decoded label. A ↑ appears if the label was not correctly read

Alignment mode

Command	JP
Description	This command simplifies mounting and alignment of the device. After activating the function with **JP+**, the device continuously supplies status information to the serial interfaces. With this online command, the scanner is set to terminate the decoding after 100 successfully decoded labels and output the status information. Subsequently, the read process is reactivated automatically. In addition to the output of the status information, the laser beam is used to display the reading quality. Depending on how many read results could be extracted, the duration of the laser's off time increases. If the reading quality is high, the laser beam flashes in brief, regular intervals. The worse the decoder decodes, the longer the pauses become during which the laser is switched off. The flashing intervals become more and more irregular because the laser may, in total, be active for longer to extract more labels. The duration of the pauses has been stepped in such a way that they can be distinguished by the eye.
Parameter	+ Starts the adjustment mode. - Ends the adjustment mode.

Command	JP
Acknowledgment	yyy_zzzzzz yyy Read quality in %. A high process availability is ensured at read qualities > 75 %. zzzzzz Bar code information.

Manual definition of the reference code

Command	RS
Description	This command can be used to define a new reference code in the device by means of direct input via the serial interface. The data is saved in the parameter set according to your input under reference code 1 through 2 and stored in the working buffer for direct further processing.
Parameter	RSyvxxzzzzzzzz y, v, x and z are placeholders (variables) for the actual input. y Defined reference code no. 1 (code 1) 2 (code 2) v Storage location for reference code: 0 RAM+EEPROM, 3 RAM only xx Defined code type (see command CA) z Defined code information (1 … 63 characters)
Acknowledgment	RSx x Status 0 Valid Rx command 1 Invalid command 2 Insufficient memory for reference code 3 Reference code has not been saved 4 Reference code invalid
Example	Input = RS130678654331 (Code 1 (1), RAM only (3), UPC (06), code information)

Reference code teach-in

Command	RT
Description	This command enables a reference code to be defined quickly by reading an example label.

Command	RT
Parameter	RTy y Function 1 Defines reference code 1 2 Defines reference code 2 + Activates the definition of reference code 1 up to the value of Parameter no_of_labels - Ends the teach event
Acknowledgment	The device first responds with the command RS and corresponding status (see command RS). After a bar code has been read, it sends the result in the following format: RCyvxxzzzzz y, v, x and z are placeholders (variables) for the actual input. y Defined reference code no. 1 (code 1) 2 (code 2) v Storage location for reference code 0 RAM+EEPROM, 3 RAM only xx Defined code type (see command CA) z Defined code information (1 … 63 characters)

With this function, only code types are recognized that are identified using the autoConfig function or which were set in the set-up.

After each reading via an RTy command, explicitly switch off the function again since failure to do so will interfere with other commands as well as prevent execution of a new RTx command.

Reading a reference code

Command	RR
Description	The command reads out the reference code defined in the device. If no parameters are specified, all defined codes are output.
Parameter	<reference code number> 1 … 2 value range of reference code 1 to 2

Command	RR
Acknowledgment	If no reference codes are defined, the device responds with the RS command and corresponding status (see command RS). For valid codes, the output corresponds to the following format: RCyvxxzzzzzz y, v, x and z are placeholders (variables) for the actual input. y Defined reference code no. 1 (code 1) 2 (code 2) v Storage location for reference code 0 RAM+EEPROM, 3 RAM only xx Defined code type (see command CA) z Defined code information (1 … 63 characters)

11.2 Online commands for system control

Activating sensor input

Command	+
Description	The command activates decoding. This command is used to activate the reading gate. It remains active until it is deactivated by one of the following criteria: • Deactivation by a manual command • Deactivation by a switching input • Deactivation upon reaching the specified read quality (equal scans) • Deactivation by timeout • Deactivation upon reaching a preset number of scans without information.
Parameter	No
Acknowledgment	None

Deactivating sensor input

Command	-
Description	The command deactivates decoding. This command can be used to deactivate the reading gate. Following deactivation, the read result is output. Because the reading gate was manually deactivated and, thus, no GoodRead criterion was met, a NoRead is output.
Parameter	No
Acknowledgment	None

11.3 Online commands for the parameter set operations

Copying parameter set

Command	PC
Description	This command can only be used to copy parameter sets in their entirety. This can be used to replicate the three parameter sets default, permanent and operating parameters on the basis of one another. In addition, this command also be used to restore the factory settings.
Parameter	PC<Source type><Target type> <Source type> Parameter data set that is to be copied, unit [dimensionless] 0 Parameter data set in permanent memory 2 Default or factory parameter set 3 Operating parameter data set in volatile memory <Target type> Parameter set into which the data is to be copied, unit [dimensionless] 0 Parameter data set in permanent memory 3 Operating parameter data set in volatile memory Permissible combinations here include: 03 Copying the data set from the permanent memory to the operating parameter data set 30 Copying the operating parameter data set to the permanent parameter set memory 20 Copying the default parameters to the permanent memory and to the main memory
Acknowledgment	PS=<aa> <aa> Status acknowledgment, unit [dimensionless] 00 Ok 01 Syntax error 02 Impermissible command length 03 Reserved 04 Reserved 05 Reserved 06 Impermissible combination, source type - target type

Requesting parameter data set from device

Command	PR
Description	The parameters of the device are grouped together in a parameter set and permanently stored in memory. There is one parameter set in permanent memory and one operating parameter set in volatile memory; in addition, there is a default parameter set (factory parameter set) for initialization. This command can be used to edit the first two parameter sets (in permanent and volatile memory). A check sum can be used for reliable parameter transfer.
Parameter	PR<BCC type><PS type><Address><Data length>[<BCC>] <BCC type> Check-digit function during transmission, unit [dimensionless] 0 Not used 3 BCC mode 3 <PS type> Memory from which the values are to be read, unit [dimensionless] 0 Parameter values stored in the flash memory 1 Reserved 2 Default values 3 Operating values in RAM <Address> Relative address of the data within the data set aaaa Four-digit, unit [dimensionless] <Data length> Length of the parameter data to be transferred bbbb Four-digit, unit [length in bytes] <BCC> Check sum calculated as specified under BCC type

Command	PR
Acknowledgment positive	PT<BCC type><PS type><Status><Start> <Parameter value - address><Parameter value - address+1>… [;<Address><Parameter value - address>][<BCC>] <BCC type> Check-digit function during transmission, unit [dimensionless] 0 Not used 3 BCC mode 3 <PS type> Memory from which the values are to be read, unit [dimensionless] 0 Parameter values stored in the flash memory 2 Default values 3 Operating values in RAM <Status> Mode of parameter processing, unit [dimensionless] 0 No further parameters 1 Additional parameters follow <Start> Relative address of the data within the data set, aaaa Four-digit, unit [dimensionless] <P.value A.> Parameter value of the parameter stored at this address; the parameter set data 'bb' is converted from HEX format to a 2-byte ASCII-format for transfer. <BCC> Check sum calculated as specified under BCC type
Acknowledgment negative	PS=<aa> Parameter reply: <aa> Status acknowledgment, unit [dimensionless] 01 Syntax error 02 Impermissible command length 03 Impermissible value for checksum type 04 Invalid check sum received 05 Impermissible number of data requested 06 Requested data does not (any longer) fit in the transmission buffer 07 Impermissible address value 08 Read access after end of data set 09 Impermissible QPF data set type

Determining parameter set difference to default parameters

Command	PD
Description	This command outputs the difference between the default parameter set and the operating parameter set or the difference between the default parameter set and the permanent parameter set. Comment: The reply supplied by this command can e.g. be directly used for programming a device with factory settings, whereby this device receives the same configuration as the device on which the PD-sequence was executed.
Parameter	PD<P.set1><P.set2> <P.set1> Parameter data set that is to be copied, unit [dimensionless] 0 Parameter data set in permanent memory 2 Default or factory parameter set <P.set2> Parameter set into which the data is to be copied, unit [dimensionless] 0 Parameter data set in permanent memory 3 Operating parameter data set in volatile memory Permissible combinations here include: 20 Output of the parameter differences between the default and the permanently saved parameter set 23 Output of the parameter differences between the default parameter set and the operating parameter set saved in volatile memory 03 Output of the parameter differences between the permanent parameter set and the operating parameter set saved in volatile memory

Command	PD
Acknowledgment positive	PT<BCC><PS type><Status><Addr.><P.value addr.><P.valueAddr.+1>… [;<Addr.><P.value addr.>] <BCC> 0 No check digits 3 BCC mode 3 <PS type> 0 Parameter values stored in the flash memory 3 Operating values stored in RAM <Status> 0 No further parameters 1 Additional parameters follow <Addr.> Relative address of the data within the data set aaaa Four-digit, unit [dimensionless] <P.value> Parameter value of the -bb- parameter stored at this address. The parameter set data is converted from HEX format to a 2-byte-ASCII format for transfer.
Acknowledgment negative	PS=<aa> <aa> Status acknowledgment, unit [dimensionless] 0 No difference 1 Syntax error 2 Impermissible command length 6 Impermissible combination, parameter set 1 and parameter set 2 8 Invalid parameter set

Writing parameter set

Command	PT
Description	The parameters of the device are grouped together in a parameter set and permanently stored in memory. There is one parameter set in permanent memory and one operating parameter set in volatile memory; in addition, there is a default parameter set (factory parameter set) for initialization. This command can be used to edit the first two parameter sets (in permanent and volatile memory). A check sum can be used for reliable parameter transfer.

Command	PT
Parameter	PT<BCC type><PS type><Status><Addr.><P.value addr.> <P.value addr+1>…[;<Addr.><P.value addr.>][<BCC>] <BCC type> Check-digit function during transmission, unit [dimensionless] 0 No check digits 3 BCC mode 3 <PS type> Memory from which the values are to be read, unit [dimensionless] 0 Parameter values stored in the flash memory 3 Operating values stored in RAM <Status> Mode of parameter processing, no function here, unit [dimensionless] 0 No reset after parameter change, no further parameters 1 No reset after parameter change, additional parameters follow 2 With reset after parameter change, no further parameters 6 Set parameters to factory setting, no further parameters 7 Set parameters to factory settings, lock all code types; the code-type setting must follow in the command! <Addr.> Relative address of the data within the data set aaaa Four-digit, unit [dimensionless] <P.value> Parameter value of the -bb- parameter stored at this address. The parameter set data is converted from HEX format to a 2-byte-ASCII format for transfer. <BCC> Check sum calculated as specified under BCC type.

Command	PT
Acknowledgment	PS=<aa> Parameter reply: <aa> Status acknowledgment, unit [dimensionless] 01 Syntax error 02 Impermissible command length 03 Impermissible value for checksum type 04 Invalid check sum received 05 Impermissible data length 06 Invalid data (parameter limits violated) 07 Invalid start address 08 Invalid parameter set 09 Invalid parameter type

12 Care, maintenance and disposal

Usually, the bar code reader does not require any maintenance by the operator.

12.1 Cleaning

↳ In the event of dust build-up, clean the device with a soft cloth; use a cleaning agent (commercially available glass cleaner) if necessary.

NOTICE
Do not use aggressive cleaning agents such as thinner or acetone for cleaning the device.

12.2 Servicing

12.3 Disposing

↳ For disposal observe the applicable national regulations regarding electronic components.

13 Diagnostics and troubleshooting

13.1 General causes of errors

Table 13.1: General causes of errors

Error	Possible error causes	Measures
Status LED PWR		
Off	• No supply voltage connected to the device • Hardware error	• Check supply voltage • Send device to customer service
Red, flashing	• Warning	• Query diagnostic data and carry out the resulting measures
Red, continuous light	• Error: no function possible	• Internal device error, send in device
Orange, continuous light	• Device in service mode	• Reset service mode with webConfig tool or display
Status LED NET		
Off	• No supply voltage connected to the device • Hardware error	• Check supply voltage • Send device to customer service
Red, flashing	• Communication error • With slave: network error • With master: network error following initial-ization	• Check interface • Check interface, addressing and el. connection of the slave • Check interface, addressing and el. connection of the slave
Red, continuous light	• No communication • Incorrect wiring • Incorrect address	• Check interface • Check wiring • Check addressing
Orange, flashing	• Timeout -> Error on interface	• Check interface wiring

13.2 Interface errors

Table 13.2: Interface error

Error	Possible error causes	Measures
No communication via USB service interface	• Incorrect interconnection cable • Connected device is not recognized	• Check interconnection cable • Install USB driver
No communication via RS 232 / RS 422/ RS 485	• Incorrect wiring • Different baud rates • Different protocol settings	• Check wiring • Check baud rate • Check protocol settings
Sporadic errors on the RS 232 / RS 422 / RS 485 interface	• Incorrect wiring • Effects due to EMC • Overall network expansion exceeded	• Check wiring • In particular, check wire shielding • Check the cable used • Check shielding (shield covering in place up to the clamping point) • Check grounding concept and connection to functional earth (FE) • Avoid EMC coupling caused by power cables laid parallel to device lines • Check max. network expansion as a func-tion of the max. cable lengths

14 Service and support

24-hour on-call service at:
+49 (0) 7021 573-0

Service hotline:
+49 (0) 7021 573-123
Monday to Friday 8.00 a.m. to 5.00 p.m. (UTC+1)

E-mail:
service.identify@leuze.de

Return address for repairs:
Service center
Leuze electronic GmbH + Co. KG
In der Braike 1
D-73277 Owen / Germany

14.1 What to do should servicing be required?

Please use this chapter as a master copy should servicing be required!

Enter the contact information and fax the form together with your service order to the fax number given below.

Customer data (please complete)

Device type:	
Serial number:	
Firmware:	
Display messages:	
Status of LEDs:	
Error description:	
Company:	
Contact person/department:	
Phone (direct dial):	
Fax:	
Street/No:	
ZIP code/City:	
Country:	

Leuze Service fax number:
+49 7021 573 - 199

15 Technical data

15.1 General specifications

15.1.1 Line scanner

Table 15.1: Optics

Light source	Laser diode
Wavelength	405 nm (blue light)
Beam exit	At the front
Scanning rate	800 / 1000 scans/s
Beam deflection	Via rotating polygon wheel
Useful opening angle	Max. 60°
Optics models / resolution	Medium Density (M): 0.25 … 0.5 mm Low Density (F): 0.3 … 0.5 mm
Reading distance	see chapter 15.5 "Reading field curves / optical data"
Laser class	2 acc. to EN 60825-1, CDRH (U.S. 21 CFR 1040.10)

Table 15.2: Bar code

Code types	2/5 Interleaved, Code 39, Code 128, EAN 128, EAN / UPC, Codabar, Code 93, GS1 DataBar Omnidirectional
Bar code contrast (PCS)	³ 60 %
Ambient light tolerance	2000 lx (on the bar code)
Number of bar codes per scan	6

Table 15.3: Interface

	BCL 600i Stand alone or multiNet plus master	BCL 601i multiNet plus slave
	Line scanner without heating	
Interface type	1x RS 232/422 at M 12 (B) and 1x RS 485 at M 12 (B)	1x RS 485 at 2x M 12 (B)
Protocols	Leuze Standard, Leuze multiNet plus, ACK / NAK, Xon/XOff	Leuze Standard, Leuze multiNet plus
Baud rate	4.8 ... 115.4 KBaud	
Data formats	Data bits: 7.8 Parity: none, even, odd Stop bits: 1.2	

Table 15.4: Electrical equipment

Service interface	USB 1.1 compatible, A-coded
Switching input / switching output	4 switching inputs/outputs, freely programmable functions - Switching input: 10 … 30 V DC depending on supply voltage, I max. = 8 mA - Switching output: 10 … 30VDC depending on supply voltage, I max. = 60mA (short-circuit proof) Switching inputs/outputs protected against polarity reversal!
Operating voltage	10 … 30 V DC (Class II, protection class III)
Power consumption	Max. 10 W

Table 15.5: Operating and display elements

Display	Monochromatic graphical display, 128 x 64 pixel, with background lighting
Keyboard	4 buttons
LEDs	2 LEDs for power (PWR) and bus state (NET), two-colored (red/green)

Table 15.6: Mechanical data

Degree of protection	IP 65 (with screwed-on M 12 connectors or mounted caps)
Weight	1.1 kg
Dimensions (H x W x D)	63 x 123.5 x 106.5 mm
Housing	Diecast aluminum

Table 15.7: Environmental data

Operating temperature range	0 C … +40 °C
Storage temperature range	-20 °C … +70 °C
Air humidity	Max. 90% rel. humidity, non-condensing
Vibration	IEC 60068-2-6, test Fc
Shock	IEC 60068-2-27, test Ea
Continuous shock	IEC 60068-2-29, test Eb
Electromagnetic compatibility	EN 55022; IEC 61000-6-2 (contains IEC 61000-4-2, -3, -4, -5 and -6) [a)]

a) This is a Class A product. In a domestic environment this product may cause radio interference, in which case the operator may be required to take adequate measures.

15.1.2 Oscillating-mirror scanner

Specifications are the same as for line scanner with the following differences:

Table 15.8: Optics

Beam exit	Lateral zero position at an angle of 90°
Beam deflection	Via rotating polygon wheel (horizontal) and stepping motor with mirror (vertical)
Oscillation frequency	0 … 10 Hz (adjustable, max. frequency is dependent on set swivel angle)
Max. swivel angle	±20° (adjustable)
Reading field height	see chapter 15.5 "Reading field curves / optical data"

Table 15.9: Electrical equipment

Power consumption	Max. 14 W

Table 15.10: Mechanical data

Weight	1.5 kg
Dimensions (H x W x D)	84 x 173 x 147 mm

15.2 Heating models of the bar code readers

The devices of the BCL 600i series are optionally available as models with integrated heating. In this case, heating is permanently installed ex works. Self-installation on-site by the user is not possible!

Features

- Integrated heating (permanently installed)
- Extends the application range of the device to -35 °C
- Supply voltage 24 V DC ±20%
- Enabling the device through an internal temperature switch (switch-on delay about 30 min for 24 V DC and minimum ambient temperature of -35 °C)
- Necessary conductor cross-section for the voltage supply: at least 0.75 mm^2; the use of ready-made cables is, thus, not possible

Structure

The heating consists of two parts:

- The front cover heater
- The housing heater

Function

When the 24 V DC supply voltage is applied to the device, a temperature switch initially only connects the heating to electrical power (front cover heater and housing heater). During the heating phase (around 30 min), when the inside temperature rises above 15 °C, the temperature switch connects the device to the supply voltage. This is followed by the self test and the changeover to read operation. The “PWR” LED lights up showing overall readiness for operation.

When the inside temperature reaches approx. 18 °C, another temperature switch turns the housing heater off and, if necessary, back on again (if the inside temperature drops below 15 °C). This does not interrupt the read operation. The front cover heater remains activated until an inside temperature of 25 °C is reached. At temperatures above this, the front cover heater switches off and, with a switching hysteresis of 3 °C, back on again at an inside temperature below 22 °C.

Electrical connection

The required core cross-section of the connection cable for the voltage supply must be at least 0.75 mm².

⚠ CAUTION
The voltage supply must not be looped through from one device to the next.

Power consumption

The energy requirement depends on the model:

- the line scanner with heating typically consumes 40 W and a maximum of 50 W power.
- the line scanner with oscillating mirror and heating typically consumes 60 W and a maximum of 75 W.

These values are based on operation with unconnected switching outputs.

15.2.1 Line scanner with heater

Technical data same as for line scanner without heating, however with the following differences:

Table 15.11: Specifications of the line scanners with heating

Type	BCL 600i Stand alone or multiNet plus master	BCL 601i multiNet plus slave
Design	Line scanner with heater	
Electrical data		
Operating voltage	24 V DC ±20 %	
Power consumption	Max. 50 W	
Structure of the heating	Housing heating and separate heating of the optics glass	
Warmup time	Min. 30 min at +24 V DC and an ambient temperature of -35 °C	
Min. conductor cross section	Conductor cross section of at least 0.75 mm² for the supply-voltage line. Wiring through of the voltage supply to multiple heating devices is **not** permissible. Standard, M 12 ready-made cable is **not** usable (insufficient cable cross-section)	
Environmental data		
Operating temperature range	-35 °C … +40 °C	
Storage temperature range	-20 °C … +70 °C	

15.2.2 Oscillating-mirror scanner with heating

Technical data same as for line scanner without heating, however with the following differences:

Table 15.12: Specifications of the oscillating-mirror scanners with heating

Type	BCL 600i Stand alone or multiNet plus master	BCL 601i multiNet plus slave
Design	Oscillating-mirror scanner with heating	
Optical data		
Useful opening angle	Max. 50°	
Max. swivel angle	±12°(adjustable)	
Electrical data		
Operating voltage	24 V DC ±20%	
Power consumption	Max. 75 W	
Structure of the heating	Housing heating and separate heating of the optics glass	
Warmup time	Min. 30 min at +24 V DC and an ambient temperature of -35 °C	
Min. conductor cross section	Conductor cross section of at least 0.75 mm² for the supply-voltage line. Wiring through of the voltage supply to multiple heating devices is **not** permissible. Standard, M 12 ready-made cable **not** usable (insufficient cable cross-section).	
Environmental data		
Operating temperature range	-35 °C … +40 °C	
Storage temperature range	-20 °C … +70 °C	

15.3 Dimensioned drawings

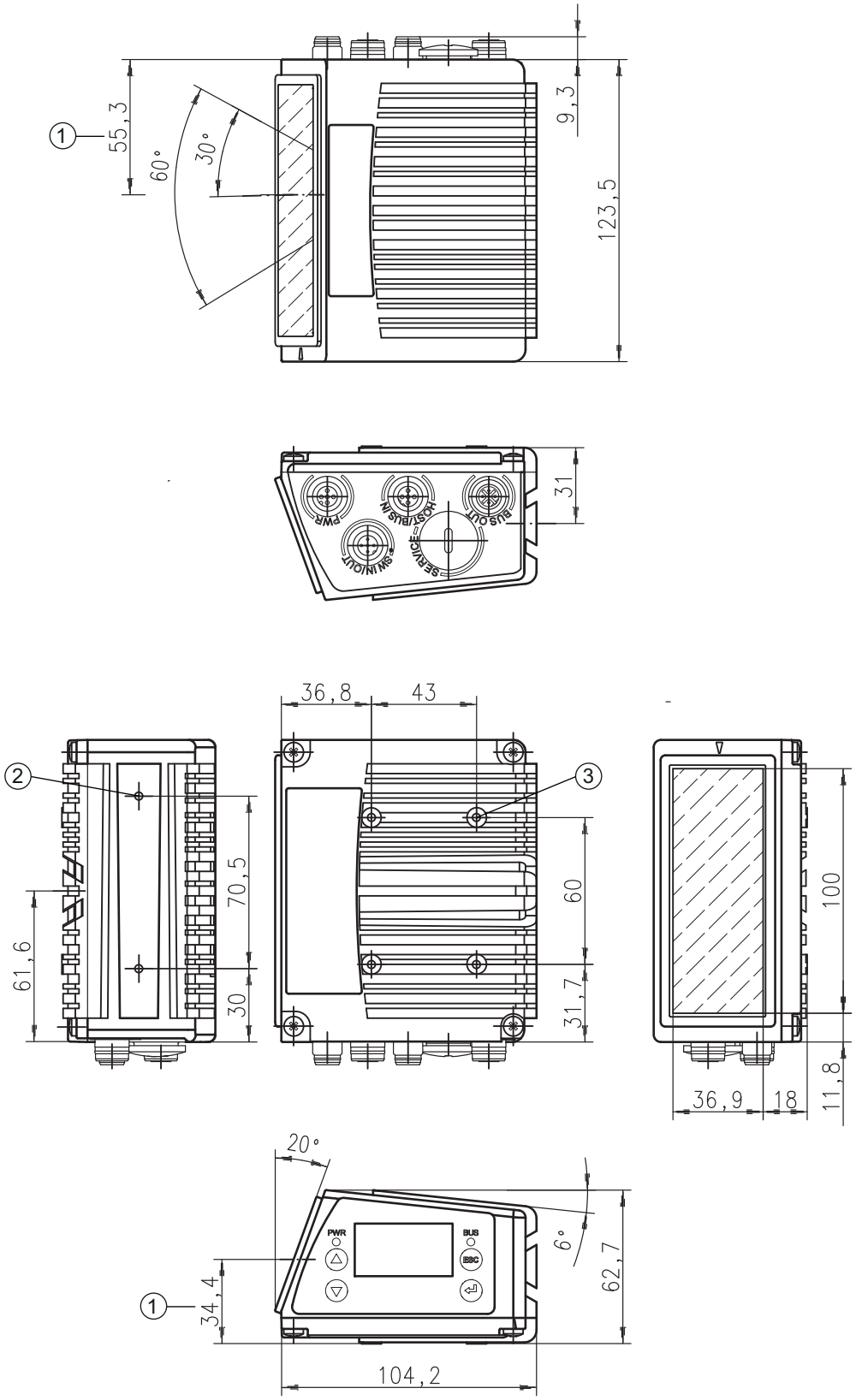

1 Optical axis
2 M4, 7 mm deep
3 M4, 6 mm deep

Figure 15.1: Dimensioned drawing - line scanner

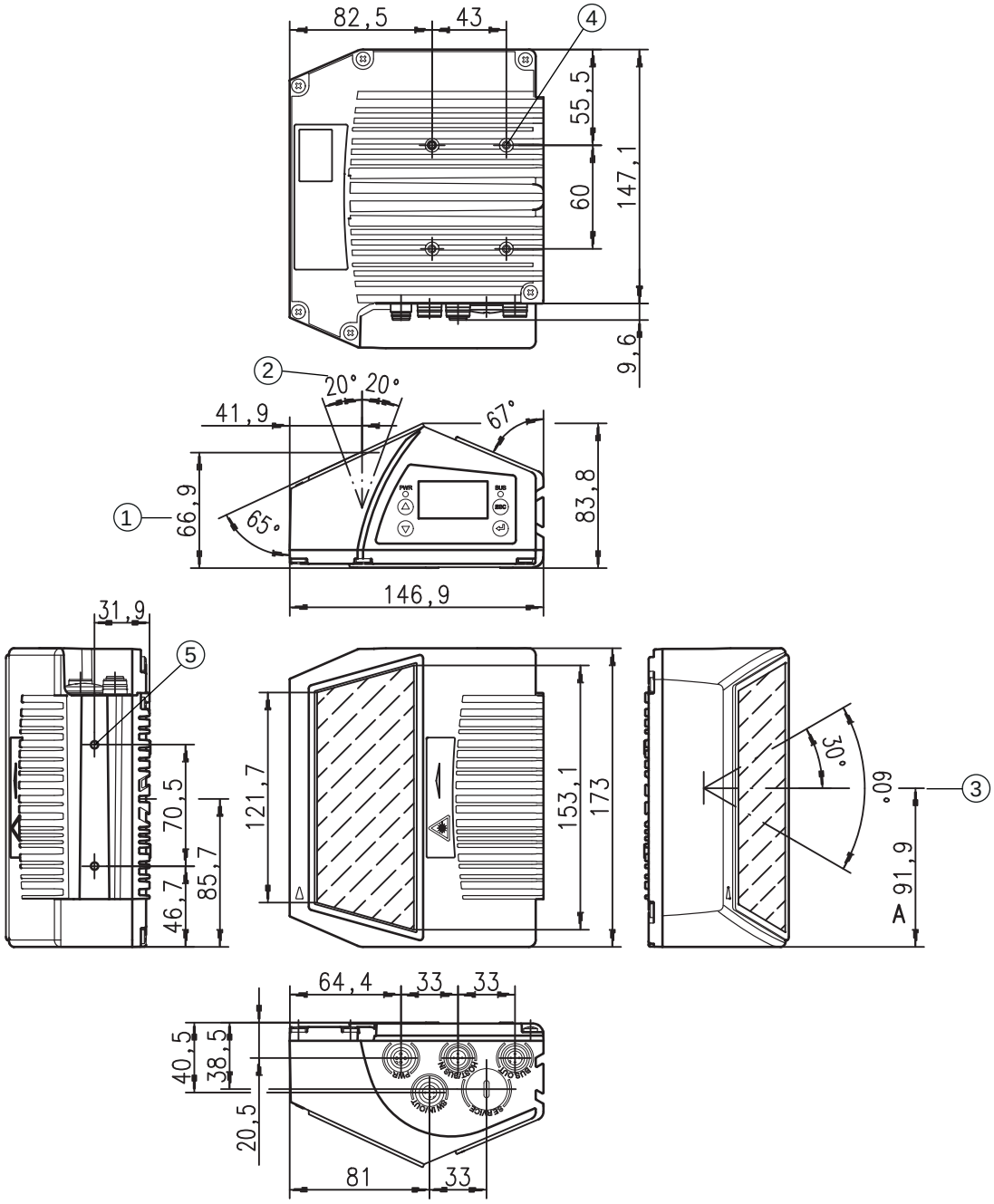

1 Optical axis
2 Optical swivel range
3 Opening angle
4 M4, 7 mm deep
5 M4, 6 mm deep

Figure 15.2: Dimensioned drawing - oscillating-mirror scanner

15.4 Dimensioned drawings: Accessories

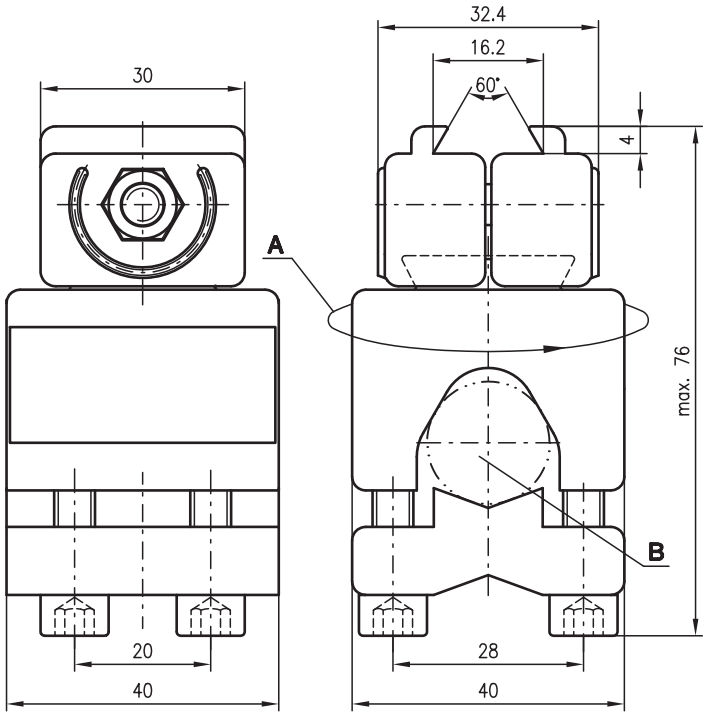

A Holder, turnable 360°
B Rods, Æ 16 … 20 mm

Figure 15.3: BT 56 mounting device

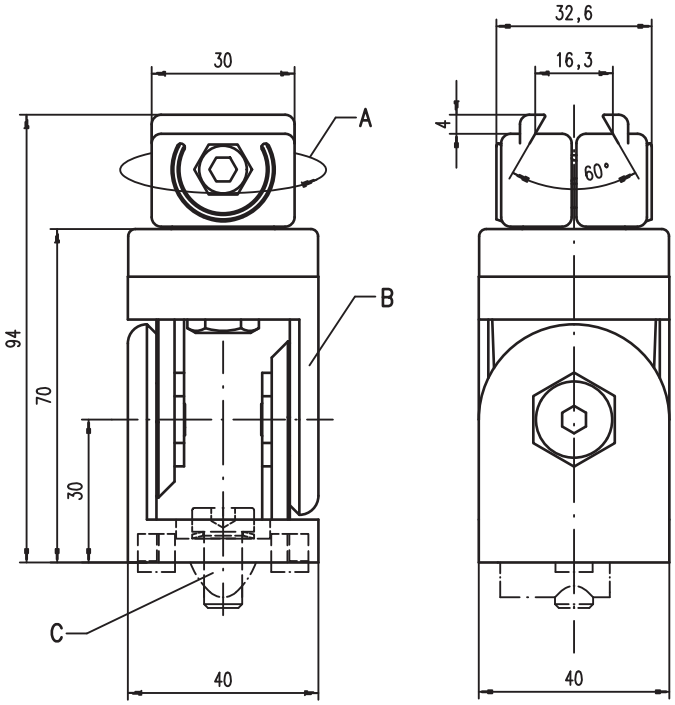

A Holder, turnable 360°
B ITEM joint, adjustable ± 90°
C M8x16 screwable cylinder, M8 serrated washer, M8 sliding block, connectors for ITEM profile (2x)

Figure 15.4: BT 59 mounting device

15.5 Reading field curves / optical data

Bar code characteristics

Please note that the size of the bar code module influences the maximum reading distance and the width of the reading field. Therefore, when selecting a mounting location and/or the bar code label, take into account the different reading characteristics of the scanner with various bar code modules.

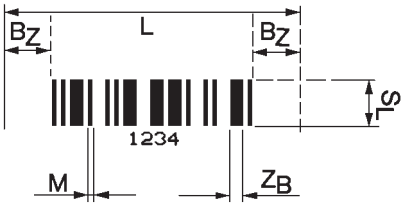

M	Module: The narrowest line or space of a bar code in mm
Z_B	Wide character: Wide bars and gaps are a multiple (ratio) of the module. Module x Ratio = Z_B (Normal Ratio 1 : 2.5)
B_Z	Quiet zone: The quiet zone should be at least 10 times the module, but not less than 2.5 mm.
L	Code length: The length of the bar code in mm including the start and stop characters. The quiet zone is included depending on the code definition.
S_L	Bar length: height of the elements in mm

Figure 15.5: The most important characteristics of a bar code

The range in which the bar code can be read by the device (the so-called reading field) depends on the quality of the printed bar code and its dimensions.
Therefore, above all, the module of a bar code is decisive for the size of the reading field.

A rule of thumb: The smaller the module of the bar code is, the smaller the maximum reading distance and reading field width will be

15.6 Reading field curves

Please notice that the real reading fields are also influenced by factors such as labeling material, printing quality, reading angle, printing contrast etc., and may thus deviate from the reading fields specified here.

The zero position of the reading distance always refers to the front edge of the housing of the beam exit and is shown for the two housing types of the device (see figure 15.6).

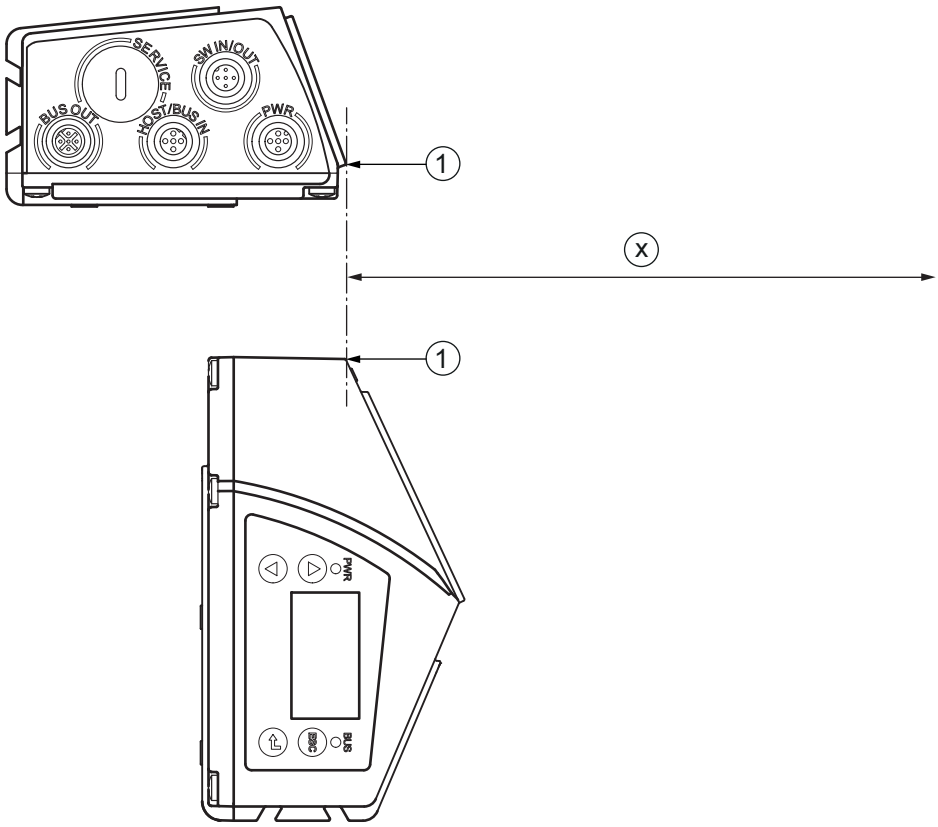

1 Zero position
x Distance acc. to reading field curves

Figure 15.6: Zero position of the reading distance

Reading conditions for the reading field curves

Table 15.13: Reading conditions

Bar code type	2/5 Interleaved
Ratio	1:2.5
ANSI specification	Class A
Reading rate	> 75%

15.6.1 Medium Density (M) - optics

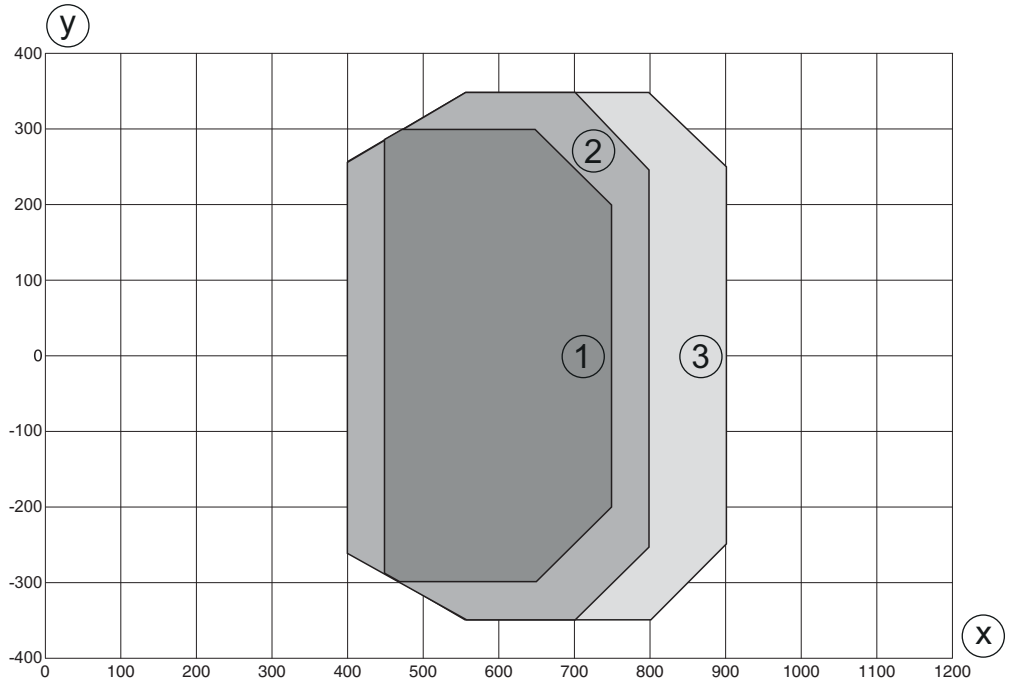

x	Reading field distance [mm]
y	Reading field width [mm]
1	Module = 0.25 mm: 450 mm - 750 mm (300 mm depth of field)
2	Module = 0.3 mm: 400 mm - 800 mm (400 mm depth of field)
3	Module = 0.35 mm: 400 mm - 900 mm (500 mm depth of field)

Figure 15.7: Medium Density reading field curve for line scanner

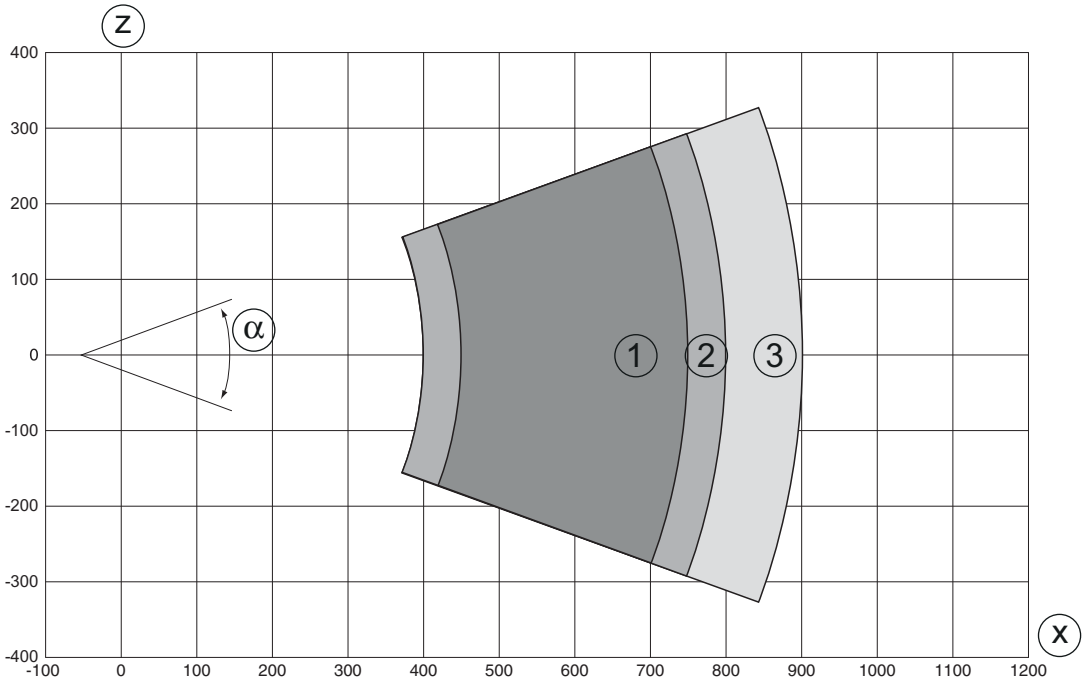

x	Reading field distance [mm]
z	Reading field height [mm]
a	Swivel range, ± 20°
1	Module = 0.25 mm: 450 mm - 750 mm (300 mm depth of field)
2	Module = 0.3 mm: 400 mm - 800 mm (400 mm depth of field)
3	Module = 0.35 mm: 400 mm - 900 mm (500 mm depth of field)

Figure 15.8: Lateral reading field curve - Medium Density for oscillating-mirror scanner

15.6.2 Low Density (F) - optics

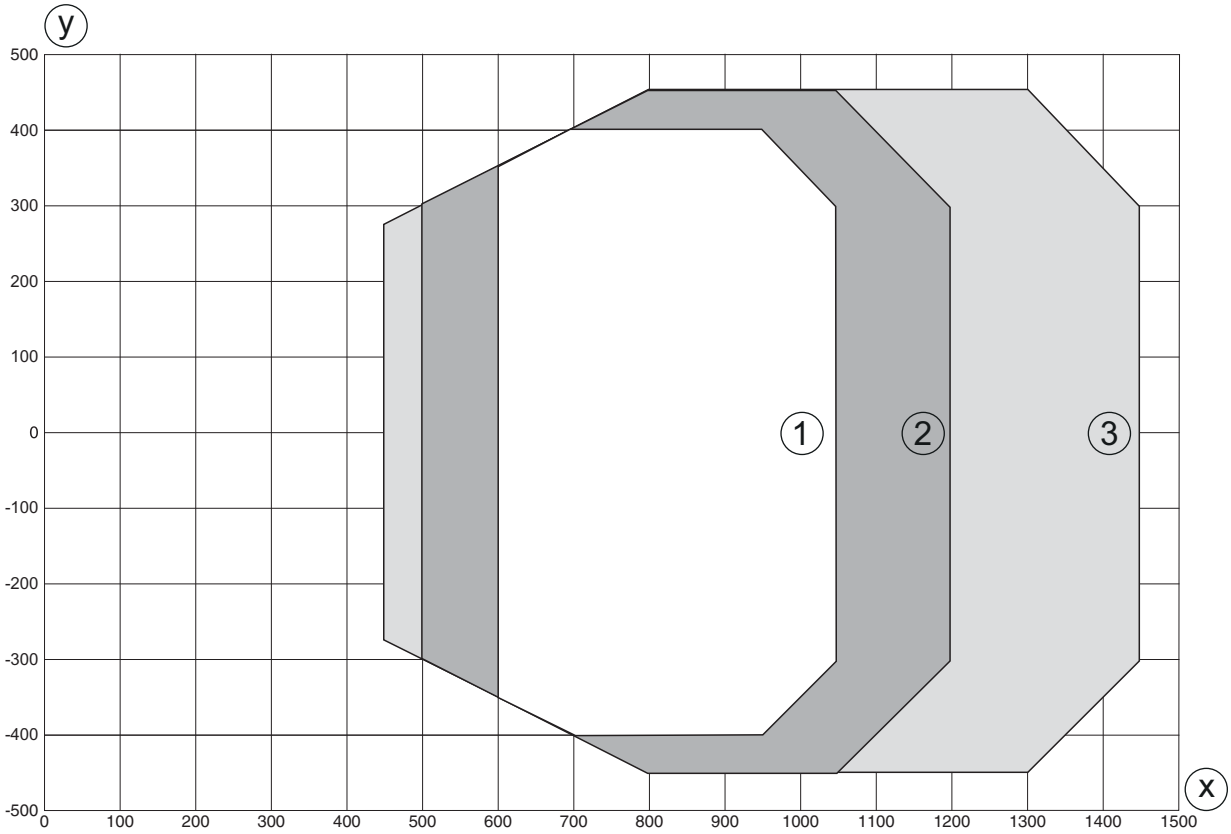

x	Reading field distance [mm]
y	Reading field width [mm]
1	Module = 0.3 mm: 600 mm - 1050 mm (450 mm depth of field)
2	Module = 0.35 mm: 500 mm - 1200 mm (700 mm depth of field)
3	Module = 0.5 mm: 450 mm - 1450 mm (1000 mm depth of field)

Figure 15.9: Reading field curve - Low Density for line scanner

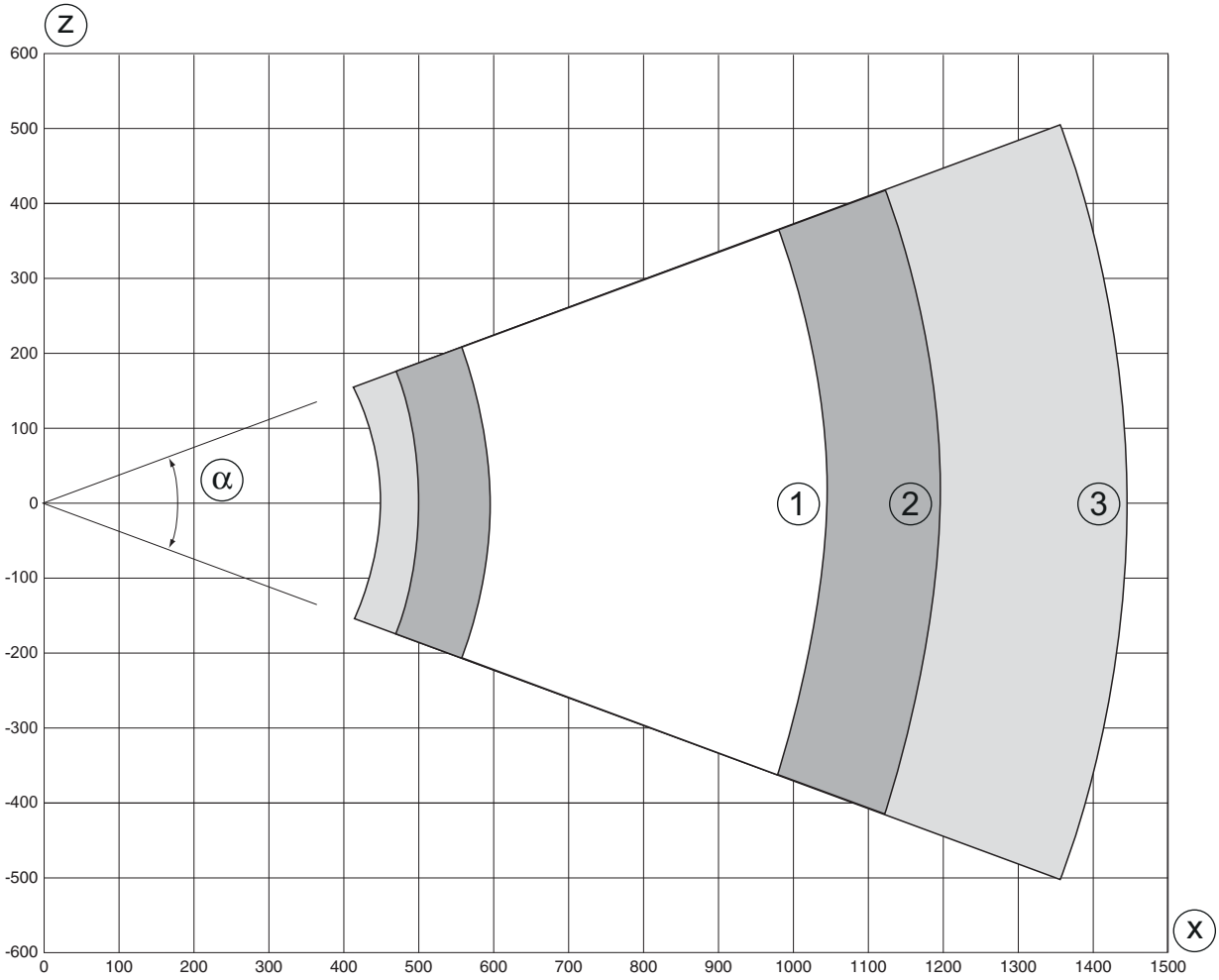

x	Reading field distance [mm]
z	Reading field height [mm]
a	Swivel range, ± 20°
1	Module = 0.3 mm: 600 mm - 1050 mm (450 mm depth of field)
2	Module = 0.35 mm: 500 mm - 1200 mm (700 mm depth of field)
3	Module = 0.5 mm: 450 mm - 1450 mm (1000 mm depth of field)

Figure 15.10: Lateral reading field curve - Low Density for oscillating-mirror scanner

15.7 Reading field curves for heating devices

The reading field curves of the heating devices differ to some extent from the normal reading curves due to the optics heating and are somewhat reduced in the reading field width as well as in the reading field height!

- The maximum opening angle for all oscillating mirror devices of the BCL 600i series is reduced to ±28° (without heating = ±30°).
- In addition, the maximum swivel range for all oscillating mirror devices of the BCL 600i series is reduced to ±12° (without heating = ±20°).
- The reading field curves and opening angles are unchanged for all line scanners with heating of the series BCL 600i.

For details, please refer to the following reading field curves for the heating devices.

15.7.1 Medium Density (M) - optics: (with heating)

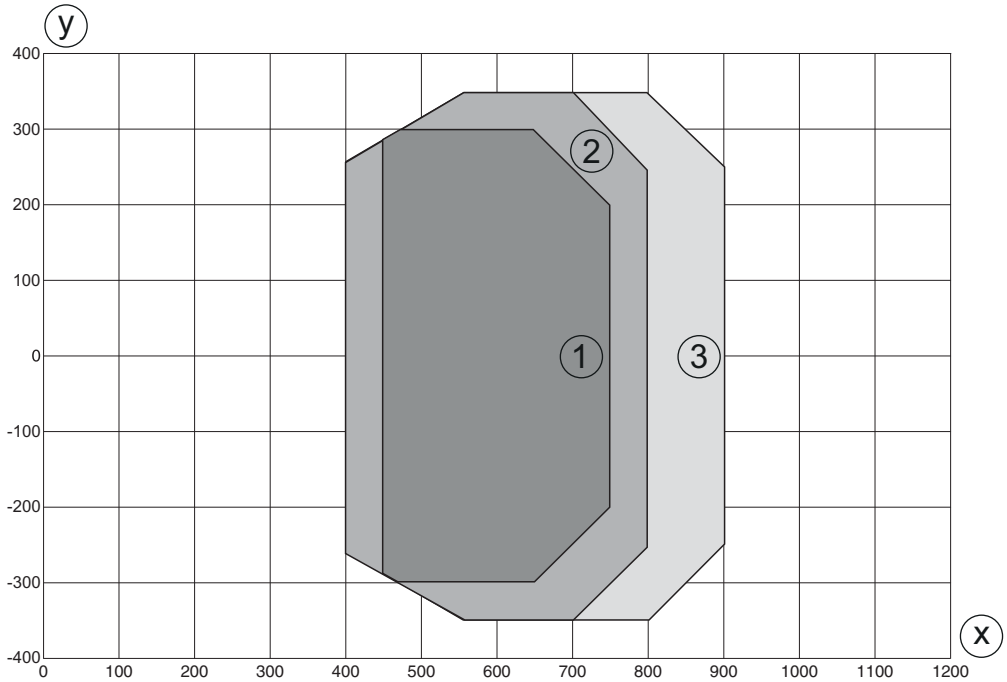

x Reading field distance [mm]
y Reading field width [mm]
1 Module = 0.25 mm: 450 mm - 750 mm (300 mm depth of field)
2 Module = 0.3 mm: 400 mm - 800 mm (400 mm depth of field)
3 Module = 0.35 mm: 400 mm - 900 mm (500 mm depth of field)

Figure 15.11:“Medium Density” reading field curve for line scanner with heating

The reading field curve applies for the reading conditions stated above (see table 15.13).

15.7.2 Medium Density (M) - optics: (with heating)

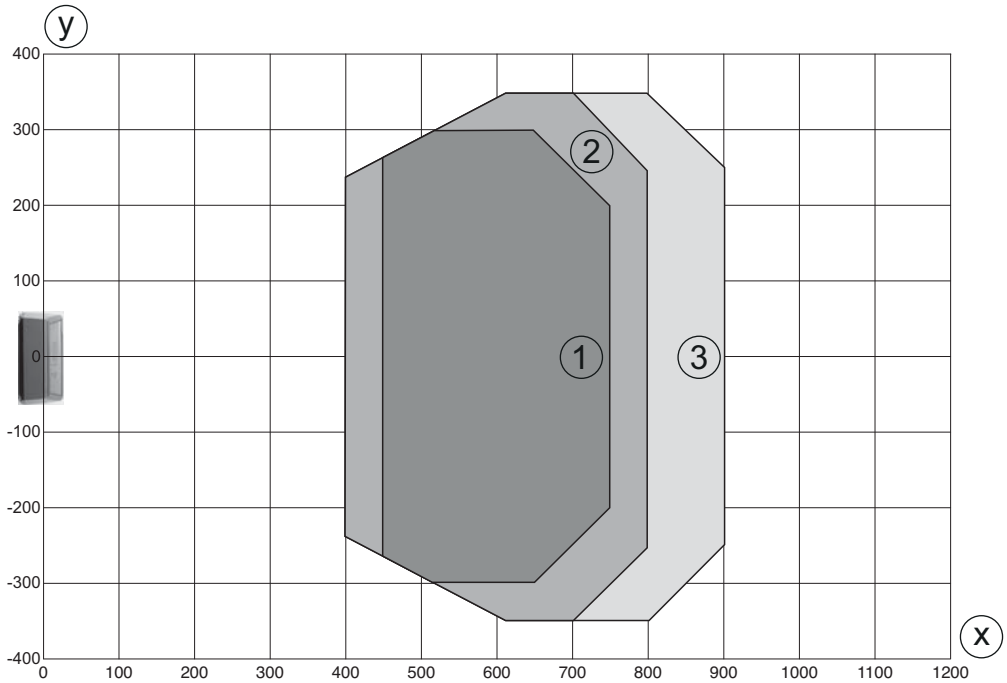

x Reading field distance [mm]
y Reading field width [mm]
1 Module = 0.25 mm: 450 mm - 750 mm (300 mm depth of field)
2 Module = 0.3 mm: 400 mm - 800 mm (400 mm depth of field)
3 Module = 0.35 mm: 400 mm - 900 mm (500 mm depth of field)

Figure 15.12:“Medium Density” reading field curve for oscillating-mirror scanners with heating

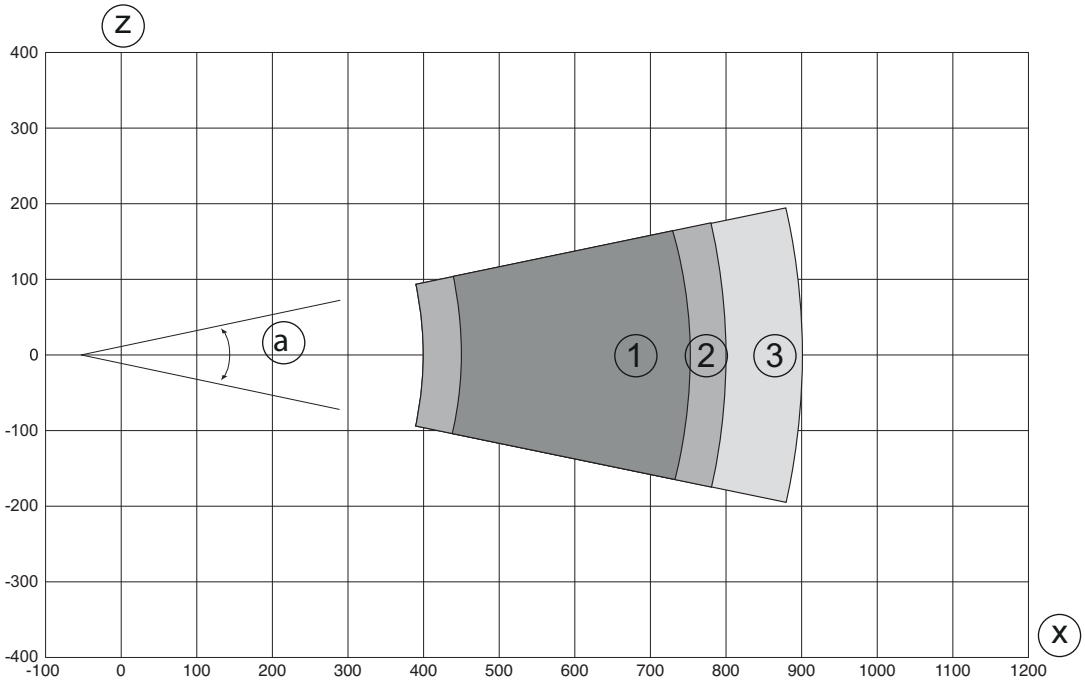

x	Reading field distance [mm]
y	Reading field width [mm]
a	Swivel range, ± 12°
1	Module = 0.25 mm: 450 mm - 750 mm (300 mm depth of field)
2	Module = 0.3 mm: 400 mm - 800 mm (400 mm depth of field)
3	Module = 0.35 mm: 400 mm - 900 mm (500 mm depth of field)

Figure 15.13: Lateral “Medium Density” reading field curve for oscillating-mirror scanners with heating

The reading field curve applies for the reading conditions stated above (see table 15.13).

15.7.3 Low Density (F) - optics: (with heating)

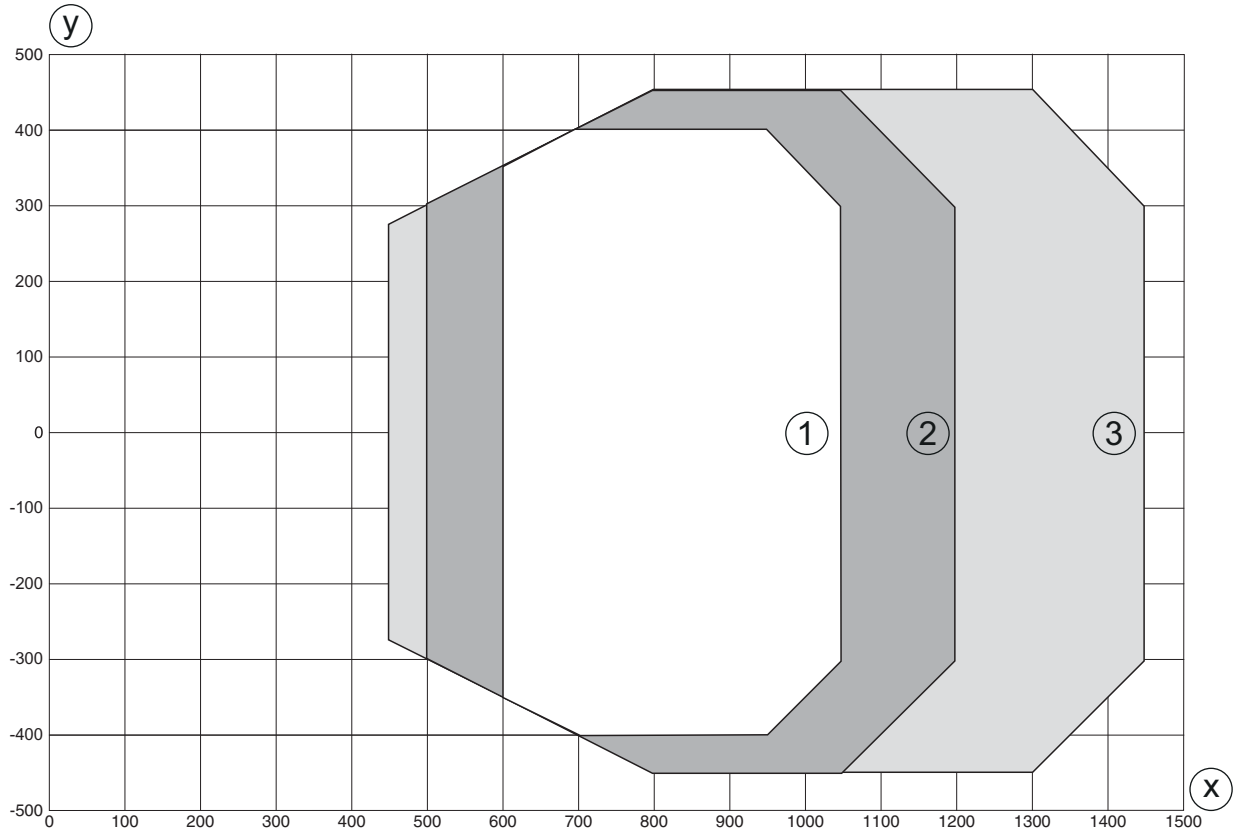

x	Reading field distance [mm]
y	Reading field width [mm]
1	Module = 0.3 mm: 600 mm - 1050 mm (450 mm depth of field)
2	Module = 0.35 mm: 500 mm - 1200 mm (700 mm depth of field)
3	Module = 0.5 mm: 450 mm - 1450 mm (1000 mm depth of field)

Figure 15.14:“Low Density” reading field curve for line scanner with heating

The reading field curve applies for the reading conditions stated above (see table 15.13).

15.7.4 Low Density (F) - optics: (with heating)

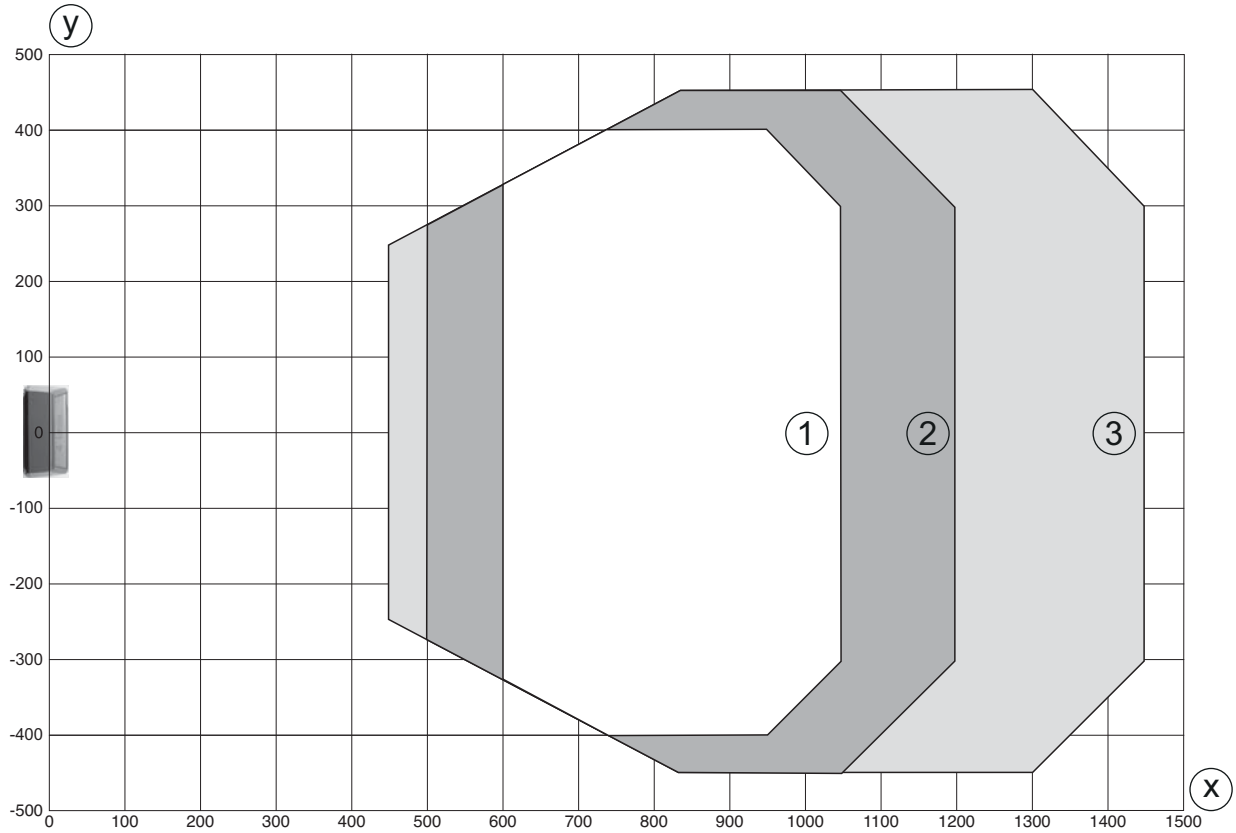

x	Reading field distance [mm]
y	Reading field width [mm]
1	Module = 0.3 mm: 600 mm - 1050 mm (450 mm depth of field)
2	Module = 0.35 mm: 500 mm - 1200 mm (700 mm depth of field)
3	Module = 0.5 mm: 450 mm - 1450 mm (1000 mm depth of field)

Figure 15.15:“Low Density” reading field curve for oscillating-mirror scanners with heating

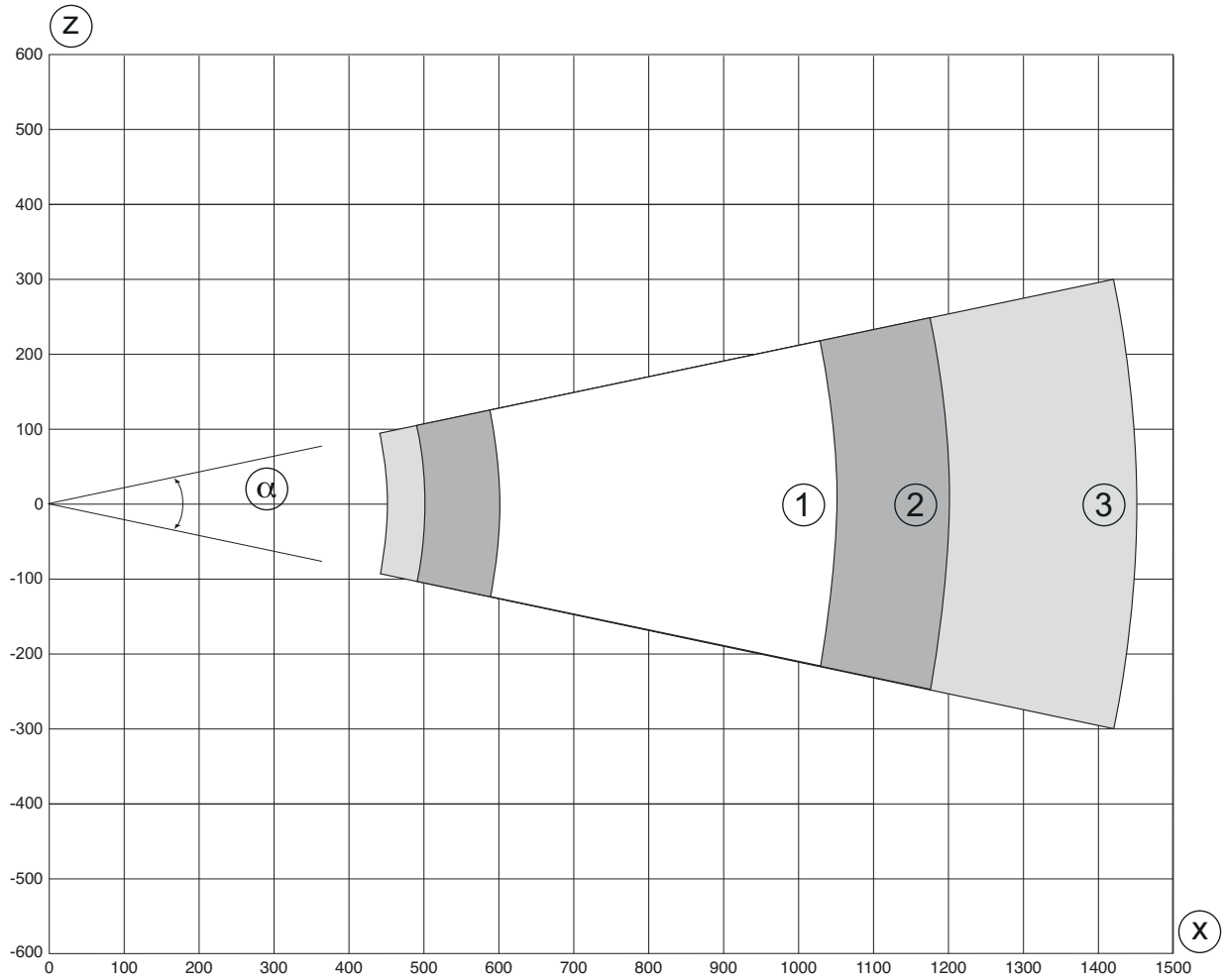

x	Reading field distance [mm]
y	Reading field width [mm]
a	Swivel range, ± 12°
1	Module = 0.3 mm: 600 mm - 1050 mm (450 mm depth of field) 2/5I
2	Module = 0.35 mm: 500 mm - 1200 mm (700 mm depth of field) 2/5I
3	Module = 0.5 mm: 450 mm - 1450 mm (1000 mm depth of field) 2/5I

Figure 15.16:Lateral “Low Density” reading field curve for oscillating-mirror scanners with heating

The reading field curve applies for the reading conditions stated above (see table 15.13).

16 Ordering information and accessories

16.1 Nomenclature

Part designation:
BCL 6xxi SO 10X

Table 16.1: Part number code

BCL	Bar code reader
6	Series: BCL 600
xx	Interface: 00: RS 232/RS 422/ RS 485 (multiNet master) 01: RS 485 (multiNet slave) 04: PROFIBUS DP 08: Ethernet 48: Profinet
i	Integrated network
S	Scanning principle: S: Line scanner O: Oscillating-mirror scanner
O	Optics: N: High Density (close) M: Medium Density (medium distance) F: Low Density (large distance) L: Ultra Low Density (very large distances)
X	Beam exit: 0 = Perpendicular 2 = Front
H	With heating

A list with all available device types can be found on the Leuze electronic website at **www.leuze.com**.

16.2 Type overview

Table 16.2: BCL 600i / BCL 601i part numbers

Part no.	Part designation	Description
50112757	BCL 600i SM 102	Line scanner, front beam exit, Medium Density
50132844	BCL 600i OM 100	Oscillating-mirror scanner, Medium Density
50132845	BCL 600i SM 102 H	Line scanner, beam exit at the front, with heating, Medium Density
50132846	BCL 600i OM 100 H	Oscillating-mirror scanner with heating, Medium Density
50132847	BCL 600i SF 102	Line scanner, front beam exit, Low Density

Part no.	Part designation	Description
50132848	BCL 600i OF 100	Oscillating-mirror scanner, Low Density
50132849	BCL 600i SF 102 H	Line scanner, beam exit at the front with heating, Low Density
50132850	BCL 600i OF 100 H	Oscillating-mirror scanner with heating, Low Density

16.3 Accessories

Table 16.3: Accessories

Part no.	Part designation	Description
Voltage supply connection cables		
50104557	K-D M12A-5P-5m-PVC	M 12 socket for PWR, axial connector, open cable end, cable length 5m
50104559	K-D M12A-5P-10m-PVC	M 12 socket for PWR, axial connector, open cable end, cable length 10m
BUS IN connection cables, M 12 connector, axial cable outlet, open cable end		
50104181	KB PB-2000-BA	Cable length 2 m
50104180	KB PB-5000-BA	Cable length 5 m
50104179	KB PB-10000-BA	Cable length 10 m
50104178	KB PB-15000-BA	Cable length 15 m
50104177	KB PB-20000-BA	Cable length 20 m
50104176	KB PB-25000-BA	Cable length 25 m
50104175	KB PB-30000-BA	Cable length 30 m
BUS OUT connection cables, M 12 connector, axial cable outlet, open cable end		
50104188	KB PB-2000-SA	Cable length 2 m
50104187	KB PB-5000-SA	Cable length 5 m
50104186	KB PB-10000-SA	Cable length 10 m
50104185	KB PB-15000-SA	Cable length 15 m
50104184	KB PB-20000-SA	Cable length 20 m
50104183	KB PB-25000-SA	Cable length 25 m
50104182	KB PB-30000-SA	Cable length 30 m
BUS OUT connection cables, M 12 connector + M 12 socket, axial cable outlets		
50104096	KB PB-1000-SBA	Cable length 1 m
50104097	KB PB-2000-SBA	Cable length 2 m
50104098	KB PB-5000-SBA	Cable length 5 m
50104099	KB PB-10000-SBA	Cable length 10 m
50104100	KB PB-15000-SBA	Cable length 15 m

Part no.	Part designation	Description
50104101	KB PB-20000-SBA	Cable length 20 m
50104174	KB PB-25000-SBA	Cable length 25 m
50104173	KB PB-30000-SBA	Cable length 30 m
Connector		
50020501	KD 095-5A	M 12 socket for voltage supply
50040155	KS 095-4A	M 12 connector for SW IN/OUT
50038538	KD 02-5-BA	M 12 socket for HOST or BUS IN
50038537	KD 02-5-SA	M 12 connector for BUS OUT
50109834	KDS BUS OUT	M 12 T-connector for BUS OUT
Terminating resistor		
50038539	TS 02-4-SA M 12	M 12 connector with integrated terminating resistor for BUS OUT
USB cables		
50107726	KB USB-Service	USB service cable
External parameter memory		
50108833	USB Memory Set	External USB parameter memory
Mounting devices		
50027375	BT 56	Mounting device for rod
50111224	BT 59	Mounting bracket

17 EC Declaration of Conformity

The bar code readers of the BCL 600 series have been developed and manufactured in accordance with the applicable European standards and directives.

The manufacturer of the product, **Leuze electronic GmbH + Co. KG** in D-73277 Owen, possesses a certified quality assurance system in accordance with ISO 9001.

Leuze electronic

the sensor people

EG-KONFORMITÄTS-ERKLÄRUNG	EC DECLARATION OF CONFORMITY	DECLARATION CE DE CONFORMITE
Der Hersteller	The Manufacturer	Le constructeur
	Leuze electronic GmbH + Co. KG **In der Braike 1, PO Box 1111** **73277 Owen, Germany**	
erklärt, dass die nachfolgend aufgeführten Produkte den einschlägigen Anforderungen der genannten EG-Richtlinien entsprechen.	declares that the following listed products fulfil the relevant provisions of the mentioned EC Directives.	déclare que les produits identifiés suivants sont conformes aux directives CE mentionnées.
Produktbeschreibung:	Description of product:	Description de produit:
Stationärer Barcodeleser **BCL 6xxi ...**	**Stationary barcode reader** **BCL 6xxi ...**	**Lecteur de code à barres stationnaire** **BCL 6xxi ...**
Angewandte EG-Richtlinie(n):	Applied EC Directive(s):	Directive(s) CE appliquées:
2004/108/EG **2006/95/EG**	**2004/108/EC** **2006/95/EC**	**2004/108/CE** **2006/95/CE**
Angewandte Normen:	Applied standards:	Normes appliquées:
EN 61000-6-2: 2005 **EN 60825-1: 2007**		**EN 61000-6-4: 2007 + A11: 2011**

15. 1. 2015

Datum / Date / Date

Ulrich Balbach, Geschäftsführer / Managing Director / Gérant

Leuze electronic GmbH + Co. KG
In der Braike 1
D-73277 Owen
Telefon +49 (0) 7021 573-0
Telefax +49 (0) 7021 573-199
info@leuze.de
www.leuze.com

LEO-ZQM-148-04-FO

Leuze electronic GmbH + Co. KG, Sitz Owen, Registergericht Stuttgart, HRA 230712
Persönlich haftende Gesellschafterin Leuze electronic Geschäftsführungs-GmbH, Sitz Owen, Registergericht Stuttgart, HRB 230550
Geschäftsführer: Ulrich Balbach
USt.-IdNr. DE 145912521 | Zollnummer 2554232
Es gelten ausschließlich unsere aktuellen Verkaufs- und Lieferbedingungen
Only our current Terms and Conditions of Sale and Delivery shall apply

SMART SENSOR BUSINESS

18 Appendix

18.1 ASCII character set

ASCII	Dec.	Hex.	Oct.	Designation	Meaning
NUL	0	00	0	ZERO	Zero
SOH	1	01	1	START OF HEADING	Start of heading
STX	2	02	2	START OF TEXT	Start of text characters
ETX	3	03	3	END OF TEXT	Last character of text
EOT	4	04	4	END OF TRANSMISS.	End of transmission
ENQ	5	05	5	ENQUIRY	Request for data trans.
ACK	6	06	6	ACKNOWLEDGE	Positive acknowledgment
BEL	7	07	7	BELL	Bell signal
BS	8	08	10	BACKSPACE	Backspace
HT	9	09	11	HORIZ. TABULATOR	Horizontal tabulator
LF	10	0A	12	LINE FEED	Line feed
VT	11	0B	13	VERT. TABULATOR	Vertical tabulator
FF	12	0C	14	FORM FEED	Form feed
CR	13	0D	15	CARRIAGE RETURN	Carriage return
SO	14	0E	16	SHIFT OUT	Shift out
SI	15	0F	17	SHIFT IN	Shift in
DLE	16	10	20	DATA LINK ESCAPE	Data link escape
DC1	17	11	21	DEVICE CONTROL 1	Device control character 1
DC2	18	12	22	DEVICE CONTROL 2	Device control character 2
DC3	19	13	23	DEVICE CONTROL 3	Device control character 3
DC4	20	14	24	DEVICE CONTROL 4	Device control character 4
NAK	21	15	25	NEG. ACKNOWLEDGE	Negative acknowledge
SYN	22	16	26	SYNCHRONOUS IDLE	Synchronization
ETB	23	17	27	EOF TRANSM. BLOCK	End of data transmission block
CAN	24	18	30	CANCEL	Invalid
EM	25	19	31	END OF MEDIUM	End of medium
SUB	26	1A	32	SUBSTITUTE	Substitution
ESC	27	1B	33	ESCAPE	Escape
FS	28	1C	34	FILE SEPARATOR	File separator
GS	29	1D	35	GROUP SEPARATOR	Group separator
RS	30	1E	36	RECORD SEPARATOR	Record separator

ASCII	Dec.	Hex.	Oct.	Designation	Meaning
US	31	1F	37	UNIT SEPARATOR	Unit separator
SP	32	20	40	SPACE	Space
!	33	21	41	EXCLAMATION POINT	Exclamation point
"	34	22	42	QUOTATION MARK	Quotation mark
#	35	23	43	NUMBER SIGN	Number sign
$	36	24	44	DOLLAR SIGN	Dollar sign
%	37	25	45	PERCENT SIGN	Percent sign
&	38	26	46	AMPERSAND	Ampersand
’	39	27	47	APOSTROPHE	Apostrophe
(	40	28	50	OPEN. PARENTHESIS	Open parenthesis
)	41	29	51	CLOS. PARENTHESIS	Closed parenthesis
*	42	2A	52	ASTERISK	Asterisk
+	43	2B	53	PLUS	Plus sign
,	44	2C	54	COMMA	Comma
-	45	2D	55	HYPHEN (MINUS)	Hyphen
.	46	2E	56	PERIOD (DECIMAL)	Period (decimal)
/	47	2F	57	SLANT	Slant
0	48	30	60	0	Number
1	49	31	61	1	Number
2	50	32	62	2	Number
3	51	33	63	3	Number
4	52	34	64	4	Number
5	53	35	65	5	Number
6	54	36	66	6	Number
7	55	37	67	7	Number
8	56	38	70	8	Number
9	57	39	71	9	Number
:	58	3A	72	COLON	Colon
;	59	3B	73	SEMICOLON	Semicolon
<	60	3C	74	LESS THAN	Less than
=	61	3D	75	EQUALS	Equals
>	62	3E	76	GREATER THAN	Greater than
?	63	3F	77	QUESTION MARK	Question mark
@	64	40	100	COMMERCIAL AT	Commercial AT

ASCII	Dec.	Hex.	Oct.	Designation	Meaning
A	65	41	101	A	Capital letter
B	66	42	102	B	Capital letter
C	67	43	103	C	Capital letter
D	68	44	104	D	Capital letter
E	69	45	105	E	Capital letter
F	70	46	106	F	Capital letter
G	71	47	107	G	Capital letter
H	72	48	110	H	Capital letter
I	73	49	111	I	Capital letter
J	74	4A	112	J	Capital letter
K	75	4B	113	K	Capital letter
L	76	4C	114	L	Capital letter
M	77	4D	115	M	Capital letter
N	78	4E	116	N	Capital letter
O	79	4F	117	O	Capital letter
P	80	50	120	P	Capital letter
Q	81	51	121	Q	Capital letter
R	82	52	122	R	Capital letter
S	83	53	123	S	Capital letter
T	84	54	124	T	Capital letter
U	85	55	125	U	Capital letter
V	86	56	126	V	Capital letter
W	87	57	127	W	Capital letter
X	88	58	130	X	Capital letter
Y	89	59	131	Y	Capital letter
Z	90	5A	132	Z	Capital letter
[	91	5B	133	OPENING BRACKET	Opening bracket
\	92	5C	134	REVERSE SLANT	Reverse slant
]	93	5D	135	CLOSING BRACKET	Closing bracket
^	94	5E	136	CIRCUMFLEX	Circumflex
_	95	5F	137	UNDERSCORE	Underscore
‘	96	60	140	GRAVE ACCENT	Grave accent
a	97	61	141	a	Lower case letter
b	98	62	142	b	Lower case letter

ASCII	Dec.	Hex.	Oct.	Designation	Meaning
c	99	63	143	c	Lower case letter
d	100	64	144	d	Lower case letter
e	101	65	145	e	Lower case letter
f	102	66	146	f	Lower case letter
g	103	67	147	g	Lower case letter
h	104	68	150	h	Lower case letter
i	105	69	151	i	Lower case letter
j	106	6A	152	j	Lower case letter
k	107	6B	153	k	Lower case letter
l	108	6C	154	l	Lower case letter
m	109	6D	155	m	Lower case letter
n	110	6E	156	n	Lower case letter
o	111	6F	157	o	Lower case letter
p	112	70	160	p	Lower case letter
q	113	71	161	q	Lower case letter
r	114	72	162	r	Lower case letter
s	115	73	163	s	Lower case letter
t	116	74	164	t	Lower case letter
u	117	75	165	u	Lower case letter
v	118	76	166	v	Lower case letter
w	119	77	167	w	Lower case letter
x	120	78	170	x	Lower case letter
y	121	79	171	y	Lower case letter
z	122	7A	172	z	Lower case letter
{	123	7B	173	OPENING BRACE	Opening brace
|	124	7C	174	VERTICAL LINE	Vertical line
}	125	7D	175	CLOSING BRACE	Closing brace
~	126	7E	176	TILDE	Tilde
DEL	127	7F	177	DELETE (RUBOUT)	Delete

18.2 Bar code samples

18.2.1 Module 0.3

1234567890

Figure 18.1: Code type 01: Interleaved 2 of 5

135AC

Figure 18.2: Code type 02: Code 39

1 23456 78901 2

Figure 18.3: Code type 06: UPC-A

3456 7890

Figure 18.4: Code type 07: EAN 8

(15) 11223

Figure 18.5: Code type 08: EAN 128

1 122334 455666 77889

Figure 18.6: Code type 10: EAN 13 Add-on

Figure 18.7: Code type 11: Codabar

Figure 18.8: Code 128

18.2.2 Module 0.5

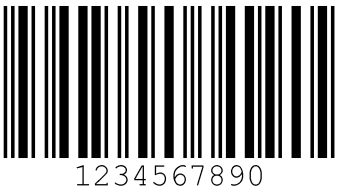

Figure 18.9: Code type 01: Interleaved 2 of 5

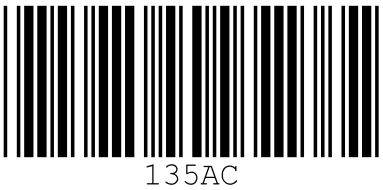

Figure 18.10: Code type 02: Code 39

Figure 18.11: Code type 06: UPC-A

Figure 18.12: Code type 07: EAN 8

(15) 11223

Figure 18.13: Code type 08: EAN 128

1 122334 455666 77889

Figure 18.14: Code type 10: EAN 13 Add-on

121314

Figure 18.15: Code type 11: Codabar

ПРОМЭЛЕКТРОНИКА / sales@prom-elec.com

abcd1234

Figure 18.16: Code 128