Leuze electronic

the sensor people

BCL548i
Bar code reader

en 02-12/2012 50113410
We reserve the right to
make technical changes

TECHNICAL DESCRIPTION

ПРОМЭЛЕКТРОНИКА / sales@prom-elec.com

© 2013
Leuze electronic GmbH + Co. KG
In der Braike 1
D-73277 Owen / Germany
Phone: +49 7021 573-0
Fax: +49 7021 573-199
http://www.leuze.com
info@leuze.de

The main menus

```
BCL548i SF 102
Leuze electronic
     GmbH & Co. KG
SW: V 1.8.0     HW:3
SN: 1009A009815 001
```

Device information - main menu

Information about
- Device type
- Software version
- Hardware version
- Serial number

```
IO1 IO2  IO3   LNK0
IO4 ATT ERR    LNK1

          12345678
```

Bar code reading window - main menu

Visualization of the read bar code information.
See "Indicators in the display" on page 89.

```
Parameter
  Parameter handling
  Decoder table
  Digital SWIO
  Ethernet
```

Parameter - main menu

Configuration of the bar code reader.
See "Parameter menu" on page 95.

```
Language selection
o Deutsch
o English
o Español
o Français
o Italiano
```

Language selection - main menu

Selection of the display language.
See "Language selection menu" on page 104.

```
Service

  Diagnostics
  Status messages
```

Service - main menu

Scanner diagnosis and status messages.
See "Service menu" on page 105.

```
Actions
o Start decoding
o Start alignment
o Start auto-setup
o Code recognition start
```

Actions main menu

Various functions for scanner configuration and manual operation.
See "Actions menu" on page 105.

Device buttons:

- Navigate **upward/laterally**
- Navigate **downward/laterally**
- ESC **ESCAPE** leave
- **ENTER** confirm

Input of values

```
12|
 <-0123456789     save
Standard ----- Unit
   126  |    |
```

- ← + ↵ **Delete character**
- 0...9 + ↵ **Enter digit**
- save + ↵ **Save input**

PWR

PWR LED

Off	Device OFF
Flashes green	Device ok, initialization phase
Green, continuous light	Device OK
Orange, continuous light	Service mode
Flashes red	Device ok, warning set
Red, continuous light	Device error

BUS

BUS LED

Off	No supply voltage
Flashes green	Initialization
Green, continuous light	Operation OK
Flashes red	Communication error
Red, continuous light	Network error

1 General information 13
1.1 Explanation of symbols 13
1.2 Declaration of conformity 13

2 Safety notices 14
2.1 General safety notices 14
2.2 Safety standards 14
2.3 Approved purpose 14
2.4 Working safely 15

3 Fast commissioning / operating principle 17
3.1 Mounting the BCL 548*i* 17
3.2 Device arrangement and selection of the mounting location 17
3.3 Electrical connection BCL 548*i* 18
3.4 Starting the device 19
3.5 Commissioning the BCL 548i on the PROFINET-IO 19
3.5.1 Preparing the control system 19
3.5.2 Installing the GSD file 19
3.5.3 Configuration 20
3.5.4 Transfer of the configuration to the IO Controller 20
3.5.5 Configuration of the device name - device naming 21
3.5.6 Check device name 22
3.6 Further settings 23
3.7 Bar code reading 23

4 Device description 24
4.1 About the bar code readers of the BCL 500*i* series 24
4.2 Characteristics of the bar code readers of the BCL 500*i* series 25
4.4 Reading techniques 28
4.4.1 Line scanner (single line) 28
4.4.2 Line scanner with oscillating mirror 29
4.4.3 Omnidirectional reading 30
4.5 Fieldbus systems 31
4.5.1 PROFINET-IO 31
4.5.2 PROFINET-IO – star topology 33
4.5.3 PROFINET-IO – line topology 33
4.6 Heater 34

4.7 External parameter memory 34
4.8 autoReflAct 35
4.9 Reference codes 35
4.10 autoConfig 36

5 Specifications 37

5.1 General specifications of the bar code readers 37
5.1.1 Line scanner 37
5.1.2 Oscillating-mirror scanner 39
5.1.3 Line scanner with deflection mirror 39

5.2 Heating models of the bar code readers 40
5.2.1 Line scanner with heating 41
5.2.2 Oscillating-mirror scanner with heating 42
5.2.3 Line scanner with deflection mirror and heating 43

5.3 Dimensioned drawings 44
5.3.1 Line scanner with / without heating 44
5.3.2 Deflection mirror scanner with / without heating 45
5.3.3 Oscillating-mirror scanner with / without heating 46

5.4 Type overview BCL 548*i* 47

5.5 Reading field curves / optical data 48

5.6 Reading field curves 49
5.6.1 High Density (N) Optics: BCL 548*i* SN 100/102 50
5.6.2 High Density (N) Optics: BCL 548*i* ON 100 51
5.6.3 Medium Density (M) Optics: BCL 548*i* SM 100/102 52
5.6.4 Medium Density (M) Optics: BCL 548*i* OM 100 53
5.6.5 Low Density (F) Optics: BCL 548*i* SF 100/102 54
5.6.6 Low Density (F) Optics: BCL 548*i* OF 100 55
5.6.7 Ultra Low Density (L) Optics: BCL 548*i* SL 102 56
5.6.8 Ultra Low Density (L) Optics: BCL 548*i* OL 100 57

5.7 Reading field curves for heating devices 58
5.7.1 High Density (N) Optics: BCL 548*i* SN 102 H 58
5.7.2 High Density (N) Optics: BCL 548*i* SN 100 H 59
5.7.3 High Density (N) Optics: BCL 548*i* ON 100 H 60
5.7.4 Medium Density (M) Optics: BCL 548*i* SM 102 H 61
5.7.5 Medium Density (M) Optics: BCL 548*i* SM 100 H 62
5.7.6 Medium Density (M) Optics: BCL 548*i* OM 100 H 63
5.7.7 Low Density (F) Optics: BCL 548*i* SF 102 H 64
5.7.8 Low Density (F) Optics: BCL 548*i* SF 100 H 65
5.7.9 Low Density (F) Optics: BCL 548*i* OF 100 H 66
5.7.10 Ultra Low Density (L) Optics: BCL 548*i* SL 102 H 67
5.7.11 Ultra Low Density (L) Optics: BCL 548*i* OL 100 H 68

6 Installation and mounting 69

6.1 Storage, transportation 69

6.2 Mounting the BCL 548*i* 70
6.2.1 Fastening with M4 x 6 screws 70
6.2.2 BT 56 mounting device 71
6.2.3 BT 59 mounting device 73

6.3 Device arrangement 74
6.3.1 Selecting a mounting location 74
6.3.2 Avoiding total reflection – Line scanner 75
6.3.3 Avoiding total reflection – oscillating/deflection-mirror scanner 75
6.3.4 Mounting location 76
6.3.5 Devices with integrated heating 76
6.3.6 Possible read angles between BCL 548*i* and bar code 77

6.4 Attaching laser warning sign 77

6.5 Cleaning 77

7 Electrical connection 78

7.1 Safety notices for the electrical connection 78

7.2 Electrical connection of the BCL 548*i* 79
7.2.1 PWR – Voltage supply and switching input/outputs 3 and 4 80
7.2.2 SERVICE – USB interface (type A) 82
7.2.3 SW IN/OUT – Switching input/switching output 83
7.2.4 HOST / BUS IN for BCL 548*i* 85
7.2.5 BUS OUT for the BCL 548*i* 86

7.3 PROFINET-IO topologies 87
7.3.1 PROFINET-IO wiring 88

7.4 Cable lengths and shielding 88

8 Display and control panel 89

8.1 Structure of the control panel 89

8.2 Status display and operation 89
8.2.1 Indicators in the display 89
8.2.2 LED status indicators 90
8.2.3 Control buttons 91

8.3 Menu description 93
8.3.2 Parameter menu 95
8.3.3 Language selection menu 104
8.3.4 Service menu 105
8.3.5 Actions menu 105

8.4 Operation 107

9 Leuze webConfig tool 110

9.1 Connecting the SERVICE USB interface 110

9.2 Installing the required software 111
9.2.1 System requirements 111
9.2.2 Installing the USB driver 111

9.3 Starting the webConfig tool 113

9.4 Short description of the webConfig tool 114
9.4.1 Module overview in the Configuration menu 114

10 Commissioning and configuration 116

10.1 General information on the PROFINET-IO implementation of the BCL 548*i* 116
10.1.1 PROFINET-IO communication profile 116
10.1.2 Conformance Classes 117

10.2 Measures to be performed prior to the initial commissioning 117

10.3 Starting the device 118

10.4 Configuration steps for a Siemens Simatic S7 control 118
10.4.1 Step 1 – Preparing the control system (S7 PLC) 118
10.4.2 Step 2 – Installation of the GSD file 119
10.4.3 Step 3 – Hardware configuration of the S7 PLC: Configuration 120
10.4.4 Step 4 – Transfer of the configuration to the IO Controller (S7 PLC) 121
10.4.5 Step 5 – Configuration of the device name - naming the device 121
10.4.6 Step 6 – Check device names 123
10.4.7 Ethernet host communication 124
10.4.7.1 Manually setting the IP address 124
10.4.7.2 Automatically setting the IP address 125
10.4.7.3 TCP/IP 126
10.4.7.4 UDP 128

10.5 Commissioning via the PROFINET-IO 129
10.5.1 General information 129

10.6 Overview of the project modules 134

10.7 Decoder modules 137
10.7.1 Modules 1-4 – Code table extensions 1 to 4 137
10.7.2 Module 5 – Code type features (symbology) 139
10.7.3 Module 7 – Code fragment technology 140

10.8 Control modules 141
10.8.1 Module 10 – Activations 141
10.8.2 Module 11 – Reading gate control 143
10.8.3 Module 12 – Multi-label 145
10.8.4 Module 13 – Fragmented read result 146
10.8.5 Module 14 – Interlinked read result 147

10.9 Result Format . . . 148
10.9.1 Module 20 – Decoder state . . . 148
10.9.2 Modules 21-27 – Decoding result . . . 150
10.9.3 Module 30 – Data formatting . . . 152
10.9.4 Module 31 – Reading gate number . . . 153
10.9.5 Module 32 – Reading gate time . . . 154
10.9.6 Module 33 – Code position . . . 154
10.9.7 Module 34 – Reading reliability (equal scans) . . . 155
10.9.8 Module 35 – Bar code length . . . 155
10.9.9 Module 36 – Scans with information . . . 156
10.9.10 Module 37 – Decoding quality . . . 156
10.9.11 Module 38 – Code direction . . . 157
10.9.12 Module 39 – Number of digits . . . 157
10.9.13 Module 40 – Code type (symbology) . . . 158
10.9.14 Module 41 – Code position in the swivel range . . . 159

10.10 Data Processing . . . 160
10.10.1 Module 50 – Characteristics filter . . . 160
10.10.2 Module 51 – Data filtering . . . 162

10.11 Identifier . . . 163
10.11.1 Module 52 – Segmentation according to the EAN process . . . 163
10.11.2 Module 53 – Segmentation via fixed positions . . . 165
10.11.3 Module 54 – Segmentation according to identifier and separator . . . 168
10.11.4 Module 55 – String handling parameters . . . 170

10.12 Device Functions . . . 171
10.12.1 Module 60 – Device status . . . 171
10.12.2 Module 61 – Laser control . . . 172
10.12.3 Module 62 – Display . . . 173
10.12.4 Module 63 – Alignment . . . 174
10.12.5 Module 64 – Oscillating mirror . . . 175
10.12.6 Module 65 – Deflection mirrors . . . 176

10.13 Switching inputs/ outputs SWIO 1 ... 4 . . . 176
10.13.1 Parameters for operating as an output . . . 176
10.13.2 Parameters for operating as an input . . . 178
10.13.3 Switch-on and switch-off functions for operation as an output . . . 180
10.13.4 Input functions for operation as an input . . . 180
10.13.5 Module 70 – Switching input/output SWIO1 . . . 181
10.13.6 Module 71 – Switching input/output SWIO2 . . . 183
10.13.7 Module 72 – Switching input/output SWIO3 . . . 185
10.13.8 Module 73 – Switching input/output SWIO4 . . . 187
10.13.9 Module 74 – SWIO status and control . . . 189

10.14 Data output . . . 191
10.14.1 Module 80 – Sorting . . . 191

10.15 Reference code comparison 192
10.15.1 Module 81 – Reference code comparator 1 192
10.15.2 Module 82 – Reference code comparator 2 194
10.15.3 Module 83 – Reference code comparison pattern 1 196
10.15.4 Module 84 – Reference code comparison pattern 2 197

10.16 Special Functions 198
10.16.1 Module 90 – Status and control. 198
10.16.2 Module 91 – AutoReflAct (automatic reflector activation) 199
10.16.3 Module 92 – AutoControl. 200

10.17 Example configuration: Indirect activation via the PLC 201
10.17.1 Task 201
10.17.2 Procedure 201

10.18 Sample configuration: Direct activation via the switching input 203
10.18.1 Task 203
10.18.2 Procedure 203

11 Online commands 205

11.1 Overview of commands and parameters. 205
11.1.1 General 'online' commands. 206

12 Diagnostics and troubleshooting 223

13 Type overview and accessories 227

13.1 Type key 227

13.2 Type overviewBCL 548*i* 227

13.3 Accessory connectors 228

13.4 Accessory USB cable 228

13.5 Accessory external parameter memory. 229

13.6 Accessory mounting device 229

13.7 Accessory reflector for AutoReflAct 229

13.8 Accessory ready-made cables for voltage supply 230
13.8.1 Contact assignment of PWR connection cable. 230
13.8.2 Specifications of the cables for voltage supply. 230
13.8.3 Order codes of the cables for voltage supply 230

13.9 Accessory ready-made cables for bus connection 231
13.9.1 General information 231
13.9.2 Contact assignments M12 PROFINET-IO connection cable KB ET... 231
13.9.3 Specifications M12 PROFINET-IO connection cable KB ET... 231
13.9.4 Order codes M12 PROFINET-IO connection cable KB ET... 232

14 Maintenance 233

14.1 General maintenance information 233

14.2 Repairs, servicing 233

14.3 Disassembling, packing, disposing 233

15 Appendix 234

15.1 Declaration of conformity 234

15.2 ASCII character set 235

15.3 Bar code samples 239

15.3.1 Module 0.3 239

15.3.2 Module 0.5 240

Figure 2.1: Attachment of the stick-on labels with warning notices at the BCL 548*i* 16
Figure 3.1: Connections of the BCL 548*i* 18
Figure 3.2: Assignment of the device names to IP addresses 20
Figure 3.3: Assigning the device names to the configured IO devices 21
Figure 3.4: MAC address - IP address -individual device name 22
Figure 4.1: Line scanner, line scanner with deflection mirror and oscillating-mirror scanner 24
Figure 4.2: Possible bar code orientation 26
Figure 4.3: Device construction 27
Figure 4.4: Deflection principle for the line scanner 28
Figure 4.5: Deflection principle for the line scanner with oscillating mirror add-on 29
Figure 4.6: Principle arrangement for omnidirectional reading 30
Table 4.1: Base record I&M0 32
Figure 4.7: PROFINET-IO in a star topology 33
Figure 4.8: PROFINET-IO in a line topology 33
Figure 4.9: External parameter memory 34
Figure 4.10: Reflector arrangement for autoReflAct 35
Table 5.1: Specifications of the BCL 548*i* line scanners without heating 37
Table 5.2: Specifications of the BCL 548*i* oscillating-mirror scanners without heating 39
Table 5.3: Specifications of the BCL 548*i* deflection-mirror scanners without heating 39
Table 5.4: Specifications of the BCL 548*i* line scanners with heating 41
Table 5.5: Specifications of the BCL 548*i* oscillating-mirror scanners with heating 42
Table 5.6: Specifications of the BCL 548*i* deflection-mirror scanners with heating 43
Figure 5.1: Dimensioned drawing BCL 548*i* line scanner S…102 44
Figure 5.2: Dimensioned drawing BCL 548*i* deflection-mirror scanner S…100 45
Figure 5.3: Dimensioned drawing BCL 548*i* oscillating-mirror scanner O…100 46
Table 5.7: Type overview BCL 548*i* 47
Figure 5.4: The most important characteristics of a bar code 48
Figure 5.5: Zero position of the reading distance 49
Table 5.8: Reading conditions 49
Figure 5.6: "High Density" reading field curve for line scanner (with/without deflection mirror) 50
Figure 5.7: "High Density" reading field curve for oscillating-mirror scanners 51
Figure 5.8: Lateral "High Density" reading field curve for oscillating-mirror scanners 51
Figure 5.9: "Medium Density" reading field curve for line scanner (with/without deflection mirror) . 52
Figure 5.10: "Medium Density" reading field curve for oscillating-mirror scanners 53
Figure 5.11: Lateral "Medium Density" reading field curve for oscillating-mirror scanners 53
Figure 5.12: "Low Density" reading field curve for line scanner (with/without deflection mirror) 54
Figure 5.13: "Low Density" reading field curve for oscillating-mirror scanners 55
Figure 5.14: Lateral "Low Density" reading field curve for oscillating-mirror scanners 55
Figure 5.15: "Ultra Low Density" reading field curve for line scanner without deflection mirror 56
Figure 5.16: "Ultra Low Density" reading field curve for oscillating-mirror scanners 57
Figure 5.17: Lateral "Ultra Low Density" reading field curve for oscillating-mirror scanners 57
Figure 5.18: "High Density" reading field curve for line scanner with heating (without deflection mirror) .58
Figure 5.19: "High Density" reading field curve for line scanner with heating (with deflection mirror) 59
Figure 5.20: "High Density" reading field curve for oscillating-mirror scanners with heating 60

Figure 5.21: Lateral "High Density" reading field curve for oscillating-mirror scanners with heating . 60
Figure 5.22: "Medium Density" reading field curve for line scanner with heating (without deflection mirror) 61
Figure 5.23: "Medium Density" reading field curve for line scanner with heating (with deflection mirror) .. 62
Figure 5.24: "Medium Density" reading field curve for oscillating-mirror scanners with heating 63
Figure 5.25: Lateral "Medium Density" reading field curve for oscillating-mirror scanners with heating.. 63
Figure 5.26: "Low Density" reading field curve for line scanner with heating (without deflection mirror). 64
Figure 5.27: "Low Density" reading field curve for line scanner with heating (with deflection mirror) 65
Figure 5.28: "Low Density" reading field curve for oscillating-mirror scanners with heating 66
Figure 5.29: Lateral "Low Density" reading field curve for oscillating-mirror scanners with heating.. 66
Figure 5.30: "Ultra Low Density" reading field curve for line scanner with heating (without deflection mirror)...67
Figure 5.31: "Ultra Low Density" reading field curve for oscillating-mirror scanners with heating 68
Figure 5.32: Lateral "Ultra Low Density" reading field curve for oscillating-mirror scanners with heating. 68
Figure 6.1: Device name plate BCL 548*i*..... 69
Figure 6.2: Fastening options using M4x6 threaded holes 70
Figure 6.3: BT 56 mounting device..... 71
Figure 6.4: Mounting example of BCL 548*i* with BT 56 72
Figure 6.5: Total reflection – line scanner..... 75
Figure 6.6: Total reflection – BCL 548*i* with oscillating/deflection mirror..... 76
Figure 6.7: Reading angle for the line scanner..... 77
Figure 7.1: Location of the electrical connections 78
Figure 7.2: Connections of the BCL 548*i*..... 79
Table 7.1: Pin assignment PWR..... 80
Figure 7.3: Switching input connection diagram SWIO_3 and SWIO_4..... 81
Figure 7.4: Switching output connection diagram SWIO_3 / SWIO_4 81
Figure 7.5: Pin assignments of SERVICE – USB interface 82
Figure 7.6: Pin assignment SW IN/OUT 83
Figure 7.7: Switching input connection diagram SWIO_1 and SWIO_2..... 83
Figure 7.8: Switching output connection diagram SWIO_1 / SWIO_2 84
Table 7.2: Pin assignment HOST / BUS IN BCL 548*i* 85
Figure 7.9: HOST / BUS IN cable assignments on RJ-45 85
Table 7.3: Pin assignment BUS OUT 86
Figure 7.10: PROFINET-IO in a star topology 87
Figure 7.11: PROFINET-IO in a line topology 87
Table 7.4: Cable lengths and shielding 88
Figure 8.1: Structure of the control panel..... 89
Table 8.1: Parameter handling submenu 95
Table 8.2: Decoder table submenu..... 96
Table 8.3: Digital SWIO submenu 99
Table 8.4: Ethernet submenu 102
Figure 9.1: Connecting the SERVICE USB interface 110
Figure 9.2: Device Manager with connected BCL 500*i*..... 112
Figure 9.3: The start page of the webConfig tool..... 113
Figure 9.4: Module overview in the webConfig tool 114
Figure 10.1: Connections of the BCL 548*i*..... 117

Table 10.1: Assignment of the device names to IP addresses 120
Figure 10.2: Assigning the device names to the configured IO devices 122
Figure 10.3: MAC address - IP address -individual device name 123
Table 10.2: Device parameters 130
Table 10.3: Module overview 135
Table 10.4: Parameters for modules 1-4 137
Table 10.5: Parameters for module 5 139
Table 10.6: Parameters for module 7 140
Table 10.7: Parameters for module 10 141
Table 10.8: Output data for module 10 141
Table 10.9: Parameters for module 11 143
Table 10.10: Parameters for module 12 145
Table 10.11: Input data for module 12 145
Table 10.12: Parameters for module 13 146
Table 10.13: Input data for module 13 146
Table 10.14: Parameters for module 13 147
Table 10.15: Input data for module 20 148
Table 10.16: Input data for modules 21 … 27 150
Table 10.17: Parameters for module 30 152
Table 10.18: Input data for module 31 153
Table 10.19: Input data for module 32 154
Table 10.20: Input data for module 33 154
Table 10.21: Input data for module 34 155
Table 10.22: Input data for module 35 155
Table 10.23: Input data for module 36 156
Table 10.24: Input data for module 37 156
Table 10.25: Input data for module 38 157
Table 10.26: Input data for module 39 157
Table 10.27: Input data for module 40 158
Table 10.28: Input data for module 41 159
Table 10.29: Parameters for module 50 160
Table 10.30: Parameters for module 51 162
Table 10.31: Parameters for module 52 163
Table 10.32: Parameters for module 53 165
Table 10.33: Parameters for module 54 168
Table 10.34: Parameters for module 55 170
Table 10.35: Input data for module 60 171
Table 10.36: Output data for module 60 171
Table 10.37: Parameters for module 61 172
Table 10.38: Parameters for module 62 173
Table 10.39: Input data for module 63 174
Table 10.40: Output data for module 63 174
Table 10.41: Parameters for module 64 175
Table 10.42: Parameters for module 65 176

Figure 10.4: Example 1: Start-up delay > 0 and switch-on time = 0 ... 177
Figure 10.5: Example 2: Start-up delay > 0 and switch-on time > 0 ... 177
Figure 10.6: Example 3: Start-up delay >0 Switch-off signal prior to lapsing of the start-up delay ... 177
Figure 10.7: Start-up delay in input mode ... 178
Figure 10.8: Switch-on time in input mode ... 179
Figure 10.9: Switch-off delay in input mode ... 179
Table 10.43: Switch-on/switch-off functions ... 180
Table 10.44: Input functions ... 180
Table 10.45: Parameters for module 70 – Input/Output 1 ... 181
Table 10.46: Parameters for module 71 – Input/Output 2 ... 183
Table 10.47: Parameters for module 72 – Input/Output 3 ... 185
Table 10.48: Parameters for module 73 – Input/Output 4 ... 187
Table 10.49: Input data for module 74 Input/output status and control ... 189
Table 10.50: Output data for module 74 Input/output status and control ... 190
Table 10.51: Parameters for module 80 ... 191
Table 10.52: Parameters for module 81 – Reference code comparison ... 192
Table 10.53: Parameters for module 82 – Reference code comparison ... 194
Table 10.54: Parameter module 83 – Reference code comparison pattern ... 196
Table 10.55: Parameter module 84 – Reference code comparison pattern ... 197
Table 10.56: Input data for module 90 – Status and control ... 198
Table 10.57: Parameters for module 91 – AutoreflAct ... 199
Table 10.58: Parameters for module 92 – AutoControl ... 200
Table 10.59: Input data for module 92 – AutoControl ... 200
Table 10.60: Device parameters for example configuration 2 ... 203
Table 12.1: BCL 548*i* alarm and diagnostics messages ... 224
Table 12.2: BCL 548*i* error categories ... 224
Table 12.1: General causes of errors ... 225
Table 12.1: Interface error ... 225
Table 13.1: Type overview BCL 548*i* ... 227
Table 13.2: Connectors for the BCL 548*i* ... 228
Table 13.3: Cable for the BCL 548*i* ... 228
Table 13.4: External parameter memory for the BCL 548*i* ... 229
Table 13.5: Mounting devices for the BCL 548*i* ... 229
Table 13.6: Reflector for the BCL 548*i* ... 229
Table 13.7: PWR cables for the BCL 548*i* ... 230
Figure 13.1: Cable configuration PROFINET-IO connection cable ... 231
Table 13.8: Bus connection cable for the BCL 548*i* ... 232
Figure 15.1: Bar code sample labels (module 0.3) ... 239
Figure 15.2: Bar code sample labels (module 0.5) ... 240

1 General information

1.1 Explanation of symbols

The symbols used in this technical description are explained below.

Attention!

This symbol precedes text messages which must strictly be observed. Failure to comply with this information results in injuries to personnel or damage to the equipment.

Attention Laser!

This symbol warns of possible danger caused by hazardous laser radiation.

Notice!

This symbol indicates text passages containing important information.

1.2 Declaration of conformity

The bar code readers of the BCL 500*i* series have been developed and manufactured in accordance with the applicable European standards and directives.

The BCL 500*i* series is "UL LISTED" according to American and Canadian safety standards, and fulfills the requirements of Underwriter Laboratories Inc. (UL).

Notice!

You can find the Declaration of Conformity of the devices in the appendix of the manual on page 234.

The manufacturer of the product, Leuze electronic GmbH & Co KG in D-73277 Owen, possesses a certified quality assurance system in accordance with ISO 9001.

2 Safety notices

2.1 General safety notices

Documentation

All entries in this technical description must be heeded, in particular the present chapter "Safety notices". Keep this technical description in a safe place. It should be available at all times.

Safety regulations

Observe the locally applicable regulations and the rules of the employer's liability insurance association.

Repair

Repairs must only be carried out by the manufacturer or an authorized representative.

2.2 Safety standards

The bar code readers of the BCL 500*i* series were developed, manufactured and tested in accordance with the applicable safety standards. They correspond to the state of the art.

2.3 Approved purpose

Attention!

The protection of personnel and the device cannot be guaranteed if the device is operated in a manner not complying with its intended use.

Bar code readers of the BCL 500*i* series are conceived as stationary, high-speed scanners with integrated decoders for all current bar codes used for automatic object detection.

In particular, unauthorized uses include:

- in rooms with explosive atmospheres
- operation for medical purposes

Areas of application

The bar code readers of the BCL 500*i* series are especially designed for the following areas of application:

- Storage and conveying technologies, in particular for object identification on fast-moving conveyor belts
- Pallet transportation applications
- Automobile sector
- Omnidirectional reading

2.4 Working safely

Attention!

Access to or changes on the device, except where expressly described in this operating manual, are not authorized.

Safety regulations

Observe the locally applicable legal regulations and the rules of the employer's liability insurance association.

Qualified personnel

Mounting, commissioning and maintenance of the device must only be carried out by qualified personnel.
Electrical work must be carried out by a certified electrician.

Attention, laser radiation!

If you look into the beam path over a longer time period, the retina of your eye may be damaged!

Never look directly into the beam path!

Do not point the laser beam of the BCL 548i at persons!

When mounting and aligning the BCL 548i, avoid reflections of the laser beam off reflective surfaces!

The BCL 548i bar code readers comply with safety standards EN 60825-1 for a class 2 product. They also comply with the U.S. 21 CFR 1040.10 regulations for a class II laser product except for deviations pursuant to Laser Notice No. 50, dated July 26, 2001.

Radiant Energy: The BCL 548i uses a low power visible laser diode. The emitted wavelength is 655nm. The average laser power is less than 1mW in accordance with the definition of class 2 lasers.

Adjustments: Do not attempt any adjustments to or alterations of this product.

Do not remove the protective housing of the bar code reader. There are no user-serviceable parts inside.

The scanner window is the only aperture through which light may be observed on this product. A failure of the scanner motor, while the laser diode continues to emit a laser beam, may cause emission levels to exceed those for safe operation. The bar code reader has safeguards to prevent this occurrence. If, however, a stationary beam is emitted, the failing bar code reader should be disconnected from its power source immediately.

CAUTION: Use of controls or adjustments or performance of procedures other than specified herein may result in hazardous light exposure.

The use of optical instruments or devices in combination with the device increases the danger of eye damage!

The housing of the BCL 548i is provided with warning notices B and C above and next to the reading window as shown in the following figure:

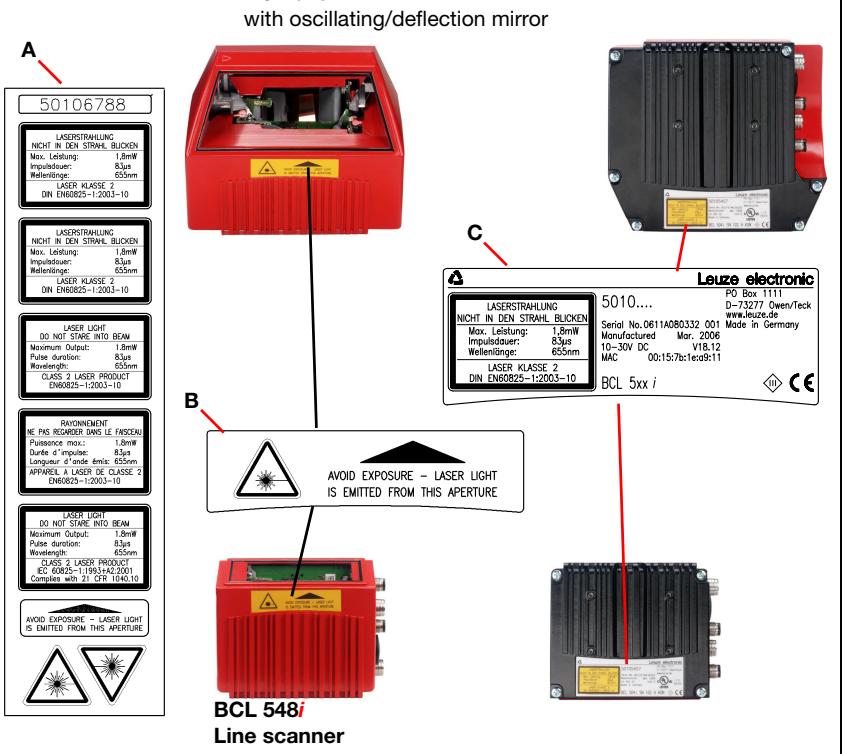

A	Included stick-on labels
B	Aperture label
C	Name plate

Figure 2.1: Attachment of the stick-on labels with warning notices at the BCL 548*i*

Notice!

It is important that you attach the stick-on labels supplied to the device (A in figure 2.1)! If the signs would be covered due to the installation situation of the BCL 548i, attach them instead in the immediate vicinity of the BCL 548i in such a way that it is not necessary to look into the laser beam when reading the notices!

3 Fast commissioning / operating principle

Below you will find a short description for the initial commissioning of the BCL 548*i*. Detailed explanations for all listed points can be found throughout this technical description.

3.1 Mounting the BCL 548*i*

There are two different types of mounting arrangements for the BCL 548*i*:

- Using two M4x6 screws on the rear of the device or using four M4x6 screws on the bottom of the device.
- Using a BT 56 mounting device on the two fastening grooves.

3.2 Device arrangement and selection of the mounting location

In order to select the right mounting location, several factors must be considered:

- Size, orientation, and position tolerance of the bar codes on the objects to be scanned.
- The reading field of the BCL 548*i* in relation to the bar code module width.
- The resulting minimum and maximum reading distance from the respective reading field (see chapter 5.5 "Reading field curves / optical data").
- The permissible cable lengths between the BCL 548*i* and the host system depending on which interface is used.
- The correct time for data output. The BCL 548*i* should be positioned in such a way that, taking into consideration the time required for data processing and the conveyor belt speed, there is sufficient time to e.g. initiate sorting operations on the basis of the read data.
- The display and control panel should be very visible and accessible.
- For configuring and commissioning with the webConfig tool, the USB interface should be easily accessible.

For specific information, please refer to chapter 4.4.

Notice!

The beam exits the BCL 548i as follows for the respective devices:
*- line scanner **parallel** to the **housing base***
*- oscillating mirror and deflection mirror **perpendicular** to the **housing base***
The black areas in figure 6.1 are the housing base. The best read results are obtained when:

- *The BCL 548i is mounted in such a way that the scanning beam is incident on the bar code at an angle of inclination greater than ±10° … 15° to vertical.*
- *The reading distance lies in the middle area of the reading field.*
- *The bar code labels are of good print quality and have good contrast ratios.*
- *You do not use high-gloss labels.*
- *There is no direct sunlight.*

3.3 Electrical connection BCL 548*i*

The **BCL 548*i*** is equipped with four M12 connectors/sockets which are A- and D-coded.

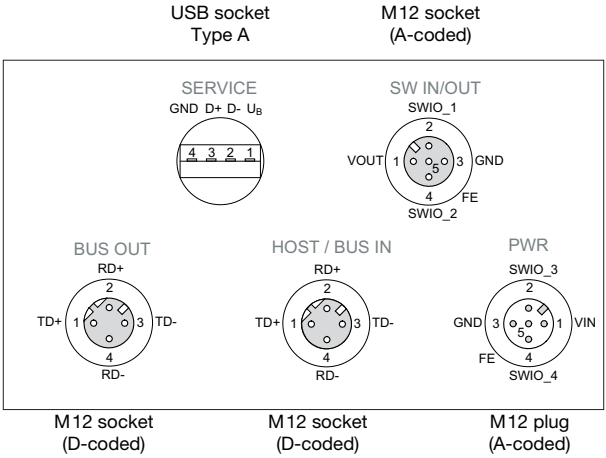

Figure 3.1: Connections of the BCL 548*i*

The **voltage supply** (10 … 30VDC) is connected at the **PWR** M12 connector.

Available at both the **PWR** M12 connector as well as at the **SW IN/OUT** M12 socket are **four freely programmable switching inputs/outputs** for custom adaptation to the respective application. Detailed information on this topic can be found in chapter 7.2.1 and chapter 7.2.3.

Standalone operation in PROFINET-IO

During stand-alone operation of the BCL 548*i*, the host interface of the superior system is connected to HOST/BUS IN. Thus, a star structure (Ethernet structure) is possible.

Network operation in PROFINET-IO

In network operation, the superior system (PC/PLC) is connected to the host interface of the BCL 548*i*. With the aid of the "switch" integrated in the BCL 548*i*, the bus connection to the next participant, e.g. a BCL 548*i*, can occur directly via the BUS OUT socket! In addition to the classic "star topology", a "linear topology" is thus also possible

3.4 Starting the device

Connect the supply voltage +10 … 30VDC (typ. +24VDC); the BCL 548i starts up and the bar code reading window appears on the display:

By default, parameter enabling is deactivated and you cannot change any settings. If you wish to carry out the configuration via the display, you must activate parameter enabling. Further information can be found in chapter "Parameter enabling" on page 107.

First, you need to assign its individual device name to the BCL 548*i*. The PLC must communicate this device name to the participant during the "device naming". Further information may be found below and in chapter "Step 5 – Configuration of the device name - naming the device" on page 121.

3.5 Commissioning the BCL 548i on the PROFINET-IO

Complete the necessary steps for commissioning a Siemens-S7 control as described below.

Further information regarding the individual commissioning steps is provided in see chapter 10.4 "Configuration steps for a Siemens Simatic S7 control".

3.5.1 Preparing the control system

In the first step, assign an IP address to the IO Controller (S7 PLC) and prepare the control for a consistent data transmission.

Notice!

If an S7 control is used, you need to ensure that Simatic-Manager Version 5.4 + service pack 5 (V5.4+SP5) or higher is used.

3.5.2 Installing the GSD file

For the subsequent configuration of the IO devices, e.g., BCL 548*i*, the corresponding GSD file must be loaded first. All data in modules required for operating the BCL 548*i* is described in this file. These are input and output data and device parameters for the functioning of the BCL 548*i* and the definition of the control and status bits.

Install the GSD file associated with the BCL 548i in the PROFINET-IO Manager of your control.

3.5.3 Configuration

Configure the PROFINET-IO system with the HW Config of the SIMATIC Manager by inserting the BCL 548i into your project.

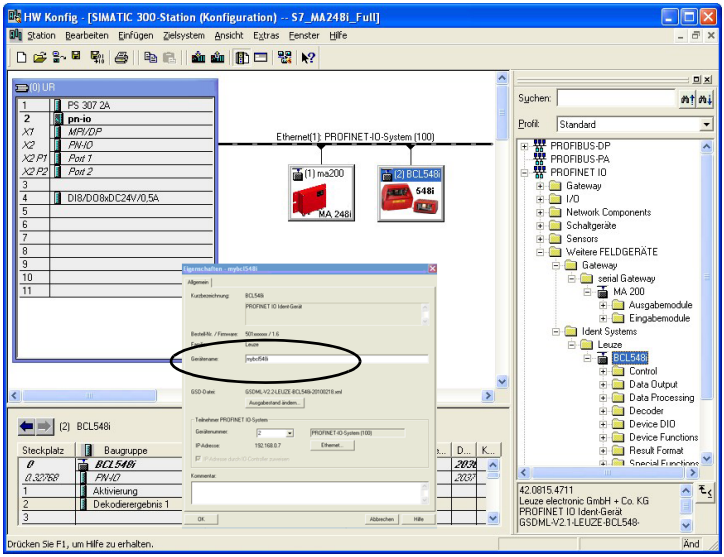

Figure 3.2: Assignment of the device names to IP addresses

Here, an IP address is assigned to a unique "device name".

3.5.4 Transfer of the configuration to the IO Controller

Transfer the PROFINET-IO configuration to the IO Controller (S7 PLC).

After the correct transfer to the IO Controller (S7 PLC), the PLC automatically carries out the following activities:

- Check device names
- Assignment of the IP addresses that were configured in the HW Config to the IO devices
- Establishment of a connection between the IO Controller and configured IO devices
- Cyclical data exchange

Notice!

Participants that have not been "named" cannot be contacted yet at this point in time!

3.5.5 Configuration of the device name - device naming

PROFINET-IO defines the "naming of the device" as the creation of a name-based relationship for a PROFINET-IO device.

Assigning the device names to the configured IO devices

↳ *Select the respective bar code scanner BCL 548i for the "device naming" based on its MAC address.*

The unique "device name" (which must match the participant in the HW Config) is then assigned to this participant.

Notice!

Multiple BCL 548i can be distinguished by the MAC addresses displayed. The MAC address may be found on the name plate of the respective bar code scanner.

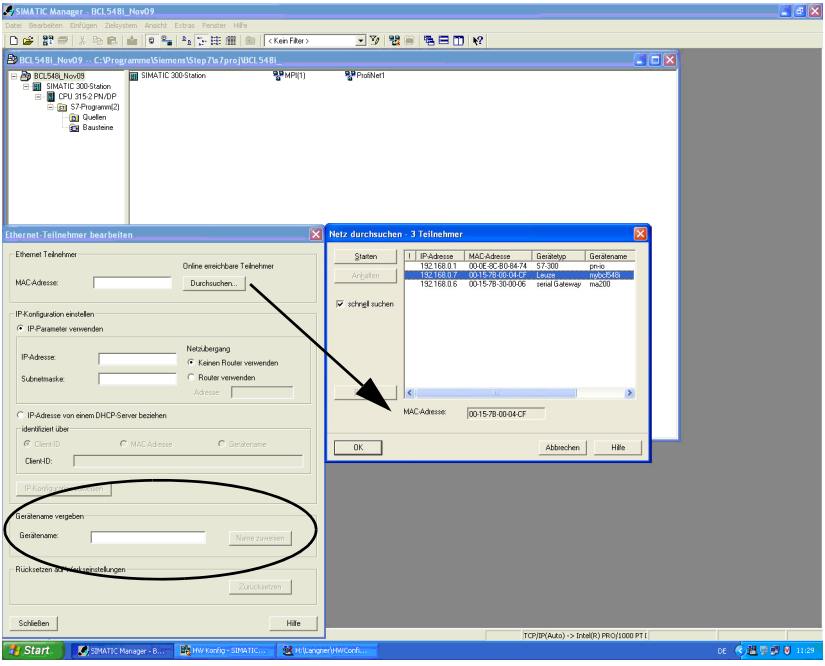

Figure 3.3: Assigning the device names to the configured IO devices

Assignment of MAC address - IP address -individual device name

↳ *At this point, assign an IP address (suggested by the PLC), a subnet mask and, if required, a router address, and assign this data to the named participant ("device name").*

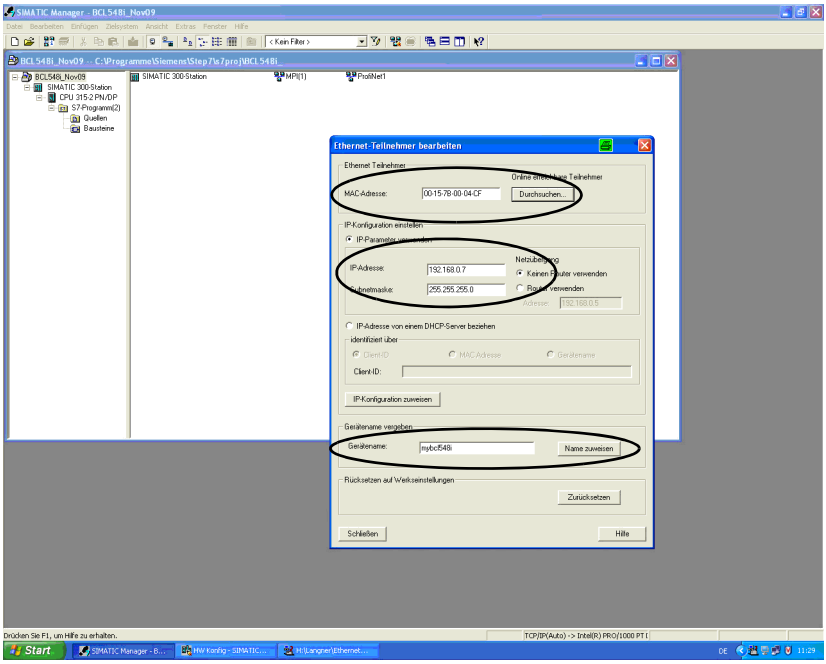

Figure 3.4: MAC address - IP address -individual device name

From now on, and when programming, only the unique "device name" (max. 255 characters) is used.

3.5.6 Check device name

↳ *After completing the configuration phase, recheck the "device names" that have been assigned. Please ensure that these names are unique and that all participants are located in the same subnet.*

3.6 Further settings

Carry out further settings via the PROFINET-IO Controller, such as the control of the decoding and processing of the read data and the configuration of the connected switching inputs and outputs, using the parameters provided by the GSD file.

Activate the desired modules (at least module 10 and one of the modules 21 … 27).

A detailed description of the modules can be found beginning on chapter 10.6.

3.7 Bar code reading

With the aid of the "Action menu", you can instruct the BCL 548*i* to read a bar code.

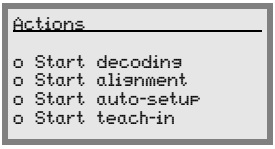

In the main menu, use the ▲▼ buttons to select the Actions menu item. Activate the Actions menu with ↵. Then select Start decoding with ▲▼ and press ↵ again to start the bar code reading operation.

To test, you can use the following bar code in the 2/5 Interleaved format. The bar code module here is 0.5:

Modul 0,5

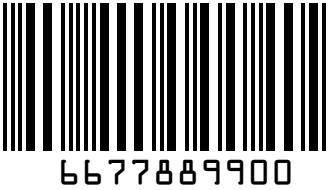

The read information appears in the display and is simultaneously passed on to the superior system (PLC or PC).

Please check the incoming data of the bar code information there.

Alternatively, you can connect a photoelectric sensor or a 24 V DC switching signal to the SW IN/OUT socket for read activation. To do this, however, you must appropriately configure the switching input (see chapter 7.2.3 "SW IN/OUT – Switching input/switching output").

4 Device description

4.1 About the bar code readers of the BCL 500*i* series

Bar code readers of the BCL 500*i* series are high-speed scanners with integrated decoder for all commonly used bar codes, e.g. 2/5 Interleaved, Code 39, Code 128, EAN 8/13 etc., as well as codes from the GS1 DataBar family.

Bar code readers of the BCL 500*i* series are available in various optics models as well as line scanners, line scanners with deflection mirrors, oscillating mirrors and also optionally as heated models.

Figure 4.1: Line scanner, line scanner with deflection mirror and oscillating-mirror scanner

The extensive options for device configuration via display or software enable adaptation to a multitude of reading tasks. Due to the large reading distance combined with the great depth of field and a very compact construction, the device is ideally suited for package and pallet transportation systems. In general, the bar code readers of the BCL 500*i* series are designed for the conveyor and storage technology market.

The interfaces (**RS 232**, **RS 485** and **RS 422**) integrated in the various device models and the fieldbus systems (**PROFIBUS DP**, **PROFINET-IO** and **Ethernet**) of the bar code readers of the BCL 500*i* series offer optimum connection to the superior host system.

4.2 Characteristics of the bar code readers of the BCL 500*i* series

Performance features:

- Integrated fieldbus connectivity = *i* -> Plug-and-Play fieldbus coupling and easy networking
- Numerous interface variants facilitate connection to the superior systems
  - RS 232, RS 422 as well as with integrated multiNet plus master
  - RS 485 and multiNet plus slave
    alternatively, various fieldbus systems, such as
  - PROFIBUS DP
  - PROFINET-IO
  - Ethernet
- Integrated code fragment technology (**CRT**) enables the identification of soiled or damaged bar codes
- Maximum depth of field and reading distances from 200 mm to 2400 mm
- Large optical opening angle and, thus, large reading field width
- High scanning rate from 800 - 1200 scans/s for fast reading tasks
- Intuitive, backlit, multi-language display with user-friendly menu navigation
- Integrated **USB 1.1** service interface
- Adjustment of all device parameters with a web browser
- Connection options for an external parameter memory
- Easy alignment- and diagnosis functions
- M12 connections with Ultra-Lock™ technology
- Four freely programmable switching inputs/outputs for the activation or signaling of states
- Automatic monitoring of the read quality with **autoControl**
- Automatic recognition and setting of the bar code type using **autoConfig**
- Reference code comparison
- Optional heating models to -35 °C
- Heavy-duty housing of protection class IP 65

Notice!

Information on technical data and characteristics can be found in chapter 5.

General information

The integrated fieldbus connectivity = *i* contained in the bar code readers of the BCL 500*i* series facilitates the use of identification systems which function without connector unit or gateways. The integrated fieldbus interface considerably simplifies handling. The Plug-and-Play concept enables easy networking and very simple commissioning: Directly connect the respective fieldbus and all configuration is performed with no additional software.

For decoding bar codes, the bar code readers of the BCL 500*i* series make available the proven **CRT decoder** with code fragment technology:

The proven code fragment technology (**CRT**) enables bar code readers of the BCL 500*i* series to read bar codes with a small bar height, as well as bar codes with a damaged or soiled print image.

With the aid of the **CRT decoder**, bar codes can also be read without problem in other demanding situations, such as with a large tilt angle (azimuth angle or even twist angle).

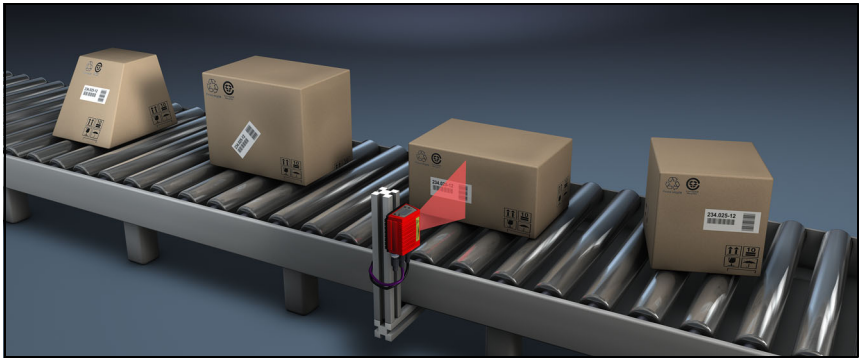

Figure 4.2: Possible bar code orientation

With the BCL 548*i*, configuration is generally performed with the aid of the GSD file.

The BCL 548*i* needs a suitable activation to start a read process as soon as an object is in the reading field. This opens a time window ("reading gate") in the BCL 548*i* for the read process during which the bar code reader has time to detect and decode a bar code.

In the basic setting, triggering takes place through an external reading cycle signal. Alternative activation options include online commands via the host interface and the **autoReflAct** function.

Through the read operation, the BCL 548*i* collects additional useful pieces of data for diagnosis which can also be transmitted to the host. The quality of the read operation can be inspected using the **alignment mode** which is integrated in the webConfig tool.

A multi-language display with buttons is used to operate the BCL 548*i* as well as for visualization purposes. Two LEDs provide additional optical information on the current operating state of the device.

The four freely configurable switching inputs/outputs "SWIO 1 … SWIO 4" can be assigned various functions and control e.g. activation of the BCL 548*i* or external devices, such as a PLC.

System, warning and error messages provide assistance in setup/troubleshooting during commissioning and read operation.

ПРОМЭЛЕКТРОНИКА / sales@prom-elec.com

4.3 Device construction

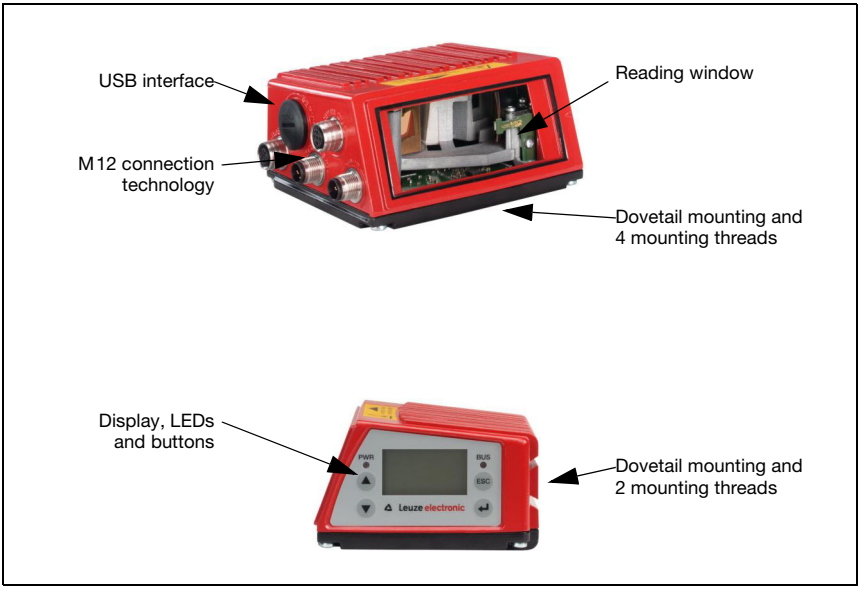

Figure 4.3: Device construction

4.4 Reading techniques

4.4.1 Line scanner (single line)

A line (scan line) scans the label. Due to the opt. opening angle, the reading field width is dependent on the read distance. Through the movement of the object, the entire bar code is automatically transported through the scan line.

The integrated code fragment technology permits twisting of the bar code (tilt angle) within certain limits. These are dependent on the transport speed, the scanning rate of the scanner and the bar code properties.

Areas of application of the line scanner

The line scanner is used:

- when the bars of the bar code are printed in the conveying direction ('ladder arrangement').
- with bar codes having very short bar lengths.
- when the ladder code is turned out of the vertical position (tilt angle).
- when the scanning distance is large.

Figure 4.4: Deflection principle for the line scanner

4.4.2 Line scanner with oscillating mirror

The oscillating mirror deflects the scan line additionally to both sides across the scan direction at a randomly adjustable oscillation frequency. In this way, the BCL 548*i* can also scan larger areas or spaces for bar codes. The reading field height (and the scan line length useful for evaluation) depends on the reading distance due to the optical beam width of the oscillating mirror.

Areas of application of the line scanner with oscillating mirror

For line scanners with oscillating mirror, oscillation frequency, start/stop position etc. are adjustable. It is used:

- when the position of the label is not fixed, e.g. on pallets – various labels can, thus, be detected at various positions.
- when the bars of the bar code are printed perpendicular to the conveying direction ('picket fence arrangement').
- when reading stationary objects.
- when the bar code is turned out of the horizontal position.
- when the scanning distance is large.
- when a large reading field (reading window) has to be covered.

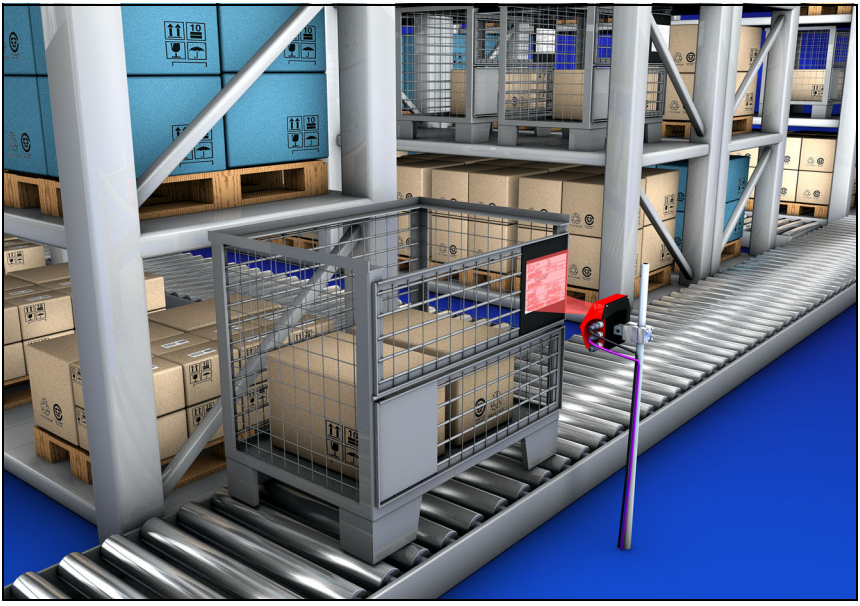

Figure 4.5: Deflection principle for the line scanner with oscillating mirror add-on

4.4.3 Omnidirectional reading

In order to read arbitrarily oriented bar codes on an object, at least 2 bar code readers are necessary. If the bar code is not printed over-square, i.e. bar length > code length, bar code readers with integrated code fragment technology are necessary.

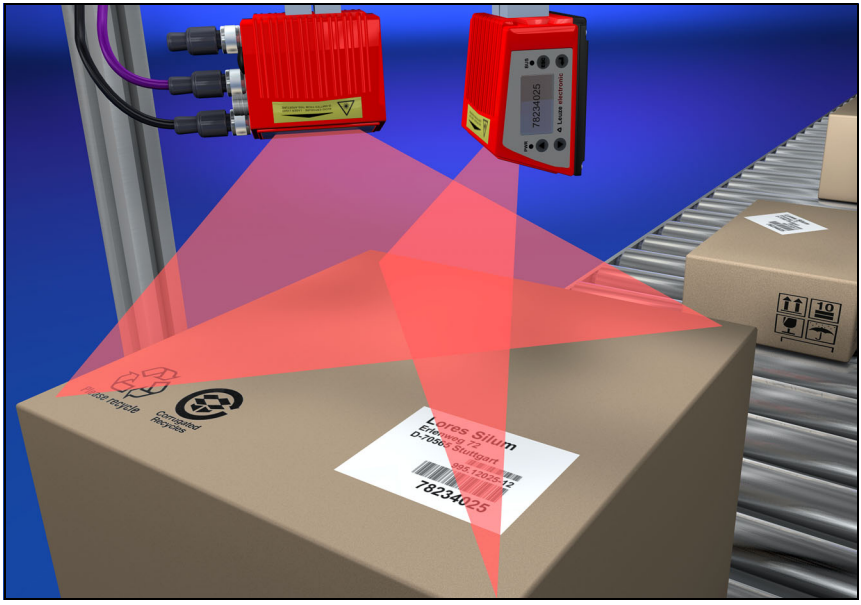

Figure 4.6: Principle arrangement for omnidirectional reading

4.5 Fieldbus systems

Various product variants of the BCL 500*i* series are available for connecting to different fieldbus systems such as PROFIBUS DP, PROFINET-IO and Ethernet.

4.5.1 PROFINET-IO

The BCL 548*i* is designed as a PROFINET-IO device (acc. to IEEE 802.3). It supports a transmission rate of up to 100 Mbit/s (100Base TX/FX), full duplex, as well as auto-negotiation and auto-crossover.

The functionality of the device is defined via parameter sets which are clustered in modules. These modules are contained in a GSDML file.

Each BCL 548*i* is sealed with a unique MAC-ID. This information is used to assign a unique, plant-specific device name ("NameOfStation") to the device via the "Discovery and Configuration Protocol (DCP)". When configuring a PROFINET-IO system, the assignment of the device names to the configured IO devices creates a name-based relationship for the participating IO devices ("device naming"). Further information can be found in section "Commissioning and configuration" on page 116.

The BCL 548*i* features multiple M12 connectors / sockets for the electrical connection of the supply voltage, the interface and the switching inputs and outputs. Additional information on the electrical connection can be found in chapter 7.

The BCL 548*i* supports:

- PROFIBUS-IO device functionality based on the PROFIBUS profile for identification systems
- Modular structure of the IO data
- PROFINET-IO RT (**R**eal **T**ime) communication
- Standard Fast Ethernet (100 Mbit/s) connections (M12 technology)
- Integrated Ethernet switch/ 2 Ethernet ports
- PROFINET-IO Conformance Class B (CC-B)
- I&M support: I&M 0-4
- Diagnostics/alarms

For further details, see chapter 10!

Identification & Maintenance Functions

The BCL 548*i* supports the base record I&M0:

Contents	Index	Data type	Description	Value
Header	0	10 bytes	Manufacturer specific Manufacturer specific	
MANUFACTURER_ID	10	UNSIGNED16	Leuze PNO manufacturer ID Leuze manufacturer ID	338
ORDER_ID	12	ASCII string 20 bytes	Leuze order no.	
SERIAL_NUMBER	32	ASCII string 16 bytes	Unique device serial number	Device-dependent
HARDWARE_REVISION	48	UNSIGNED16	Hardware revision number, e.g. "0…65535"	Device-dependent
SOFTWARE_REVISION	50	1xCHAR, 3xUNSIGNED8	Software version number, e.g. V130 correspond to "V1.3.0"	Device-dependent
REVISION_COUNTER	54	UNSIGNED16	Is incremented when updating individual modules. This function is not supported	0
PROFILE_ID	56	UNSIGNED16	PROFIBUS application profile number	0xF600 (Generic Device)
PROFILE_SPECIFIC_TYPE	58	UNSIGNED16	Info about subchannels and submodules Not relevant	0x01,0x01
IM_VERSION	60	2xUNSIGNED8	Implemented I&M version V 1.1	0x01,0x01
IM_SUPPORTED	62	Bit[16]	Optional I&M records available	0

Table 4.1: Base record I&M0

The BCL 548*i* supports further protocols and services for communication:

- TCP / IP (Client / Server)
- UDP
- DCP
- ARP
- PING

Further information on commissioning can be found in chapter 10.

4.5.2 PROFINET-IO – star topology

The BCL 548*i* can be operated as a single device (standalone) with individual device name in a star topology. The PLC must communicate this device name to the participant during the "device naming".

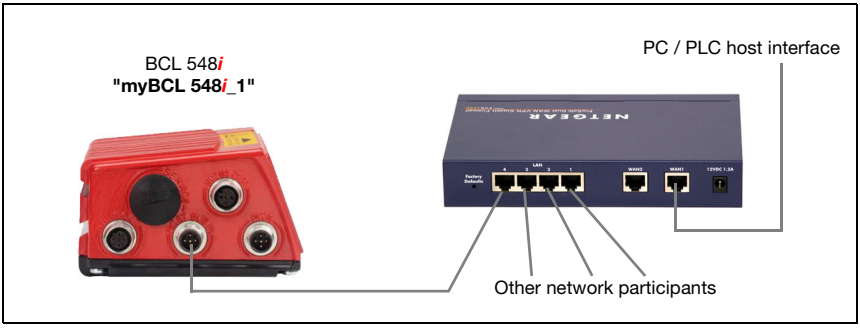

Figure 4.7: PROFINET-IO in a star topology

4.5.3 PROFINET-IO – line topology

The innovative further development of the BCL 548*i* with integrated switch functionality offers the option of connecting multiple bar code readers of type BCL 548*i* to one another without direct connection to a switch. In addition to the classic "star topology", a "linear topology" is thus also possible.

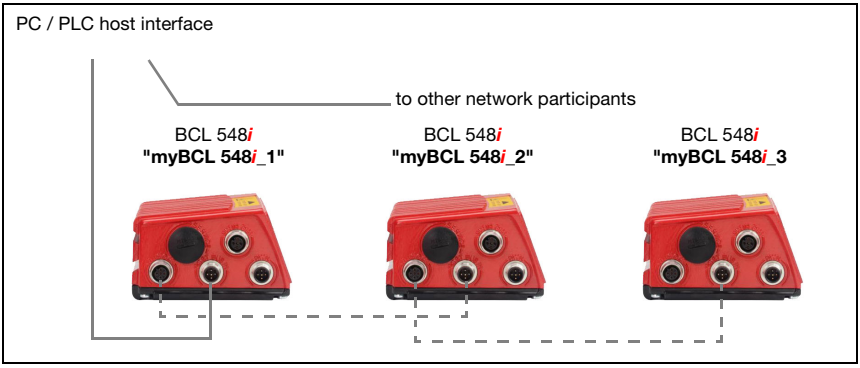

Figure 4.8: PROFINET-IO in a line topology

Each participant in this network requires its own unique device name that is assigned by the PLC during the "device naming". For specific information, please refer to chapter "Step 5 – Configuration of the device name - naming the device" on page 121.

The maximum length of a segment (connection from the hub to the last participant) is limited to 100m.

4.6 Heater

For low-temperature applications to min. -35°C (e.g. in cold storage), the bar code readers of the BCL 548*i* series can optionally be permanently fitted with a built-in heating and these bar code readers purchased as separate device models.

4.7 External parameter memory

The optionally available external parameter memory – based on a USB memory stick (compatible with version 1.1) – is housed in an external hood with integrated connectors which cover the USB service interface when installed (IP 65).

The external parameter memory simplifies the time-saving onsite exchange of a BCL 548*i* by providing a copy of the current parameter set of the BCL 548*i* and by storing the device name as well. This eliminates the need to configure the exchanged device manually and, in particular, a new naming of the device – the control can immediately access the exchanged BCL 548*i*.

The delivery contents of the external parameter memory include the hood with integrated connectors with unscrewable cover and the USB memory stick.

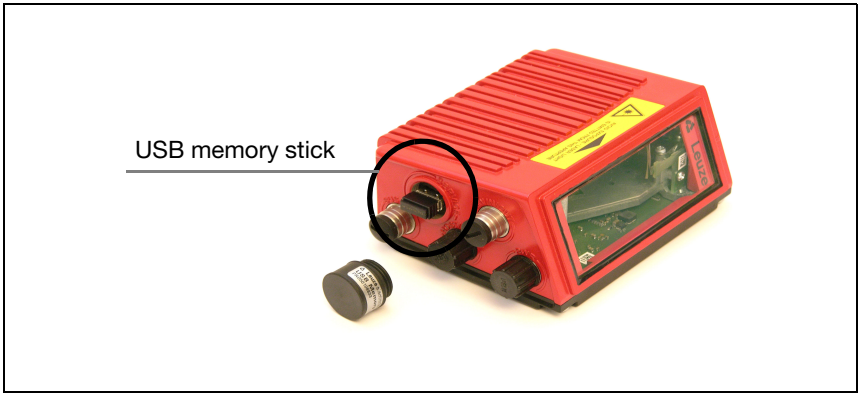

Figure 4.9: External parameter memory

Notice!

To mount, the cover of the service interface must be unscrewed. Then take the USB memory stick and plug it into the USB connection on the BCL 548i. Then, take the connector hood of the USB memory stick and screw this over the plugged-in USB memory stick to the service interface to close the system and ensure protection class IP 65.

4.8 autoReflAct

AutoReflAct stands for **Auto**matic **Refl**ector **Act**ivation and permits an activation without additional sensors. This is achieved by directing the scanner with reduced scanning beam towards a reflector mounted behind the conveyor path. As long as the scanner is targeted at the reflector, the reading gate remains closed. If, however, the reflector is blocked by an object such as a container with a bar code label, the scanner activates the read procedure, and the label on the container is read. When the path from the scanner to the reflector has cleared, the read procedure has completed and the scanning beam is reduced and again directed onto the reflector. The reading gate is closed.

Notice!

You will find a matching reflector in Accessories, and more are available on request.

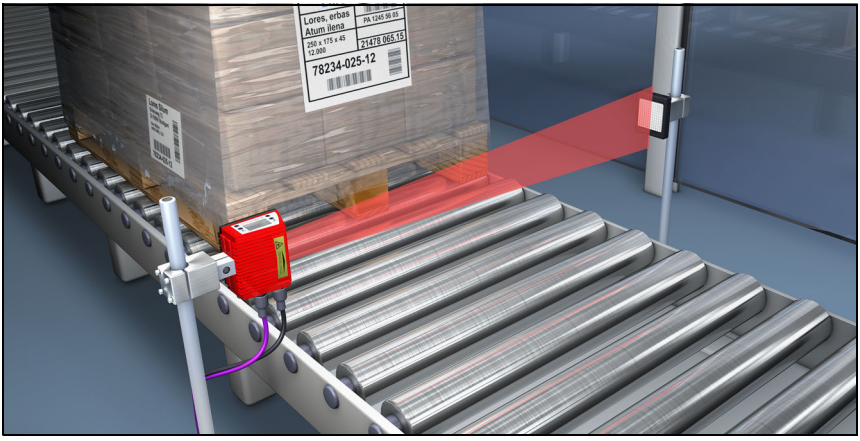

Figure 4.10: Reflector arrangement for autoReflAct

The **autoReflAct** function uses the scanning beam to simulate a photoelectric sensor and thus permits an activation without additional sensory mechanism.

4.9 Reference codes

The BCL 548*i* offers the possibility of storing one or two reference codes.

It is possible to store the reference codes by means of teach-in (display command), via the webConfig tool, via online commands or PROFINET-IO.

The BCL 548*i* can compare read bar codes with one and/or both reference codes and execute user-configurable functions depending on the comparison result.

4.10 autoConfig

With the autoConfig function, the BCL 548*i* offers the user who only wishes to simultaneously read one code type (symbology) with one number of digits an extremely simple and convenient configuration option.

After starting the autoConfig function via the display, switching input or from a superior control, it is sufficient to position a bar code label with the desired code type and number of digits in the reading field of the BCL 548*i*.

Afterward, bar codes with the same code type and number of digits are recognized and decoded.

Notice!

The settings made via display or webConfig configuration tool push the parameters set in the PROFINET-IO only temporarily into the background. They are overwritten during integration into the PROFINET-IO or when the parameter enable is deactivated!

***Device settings for operating the BCL 548i* on the PROFINET-IO are managed and configured exclusively by the PROFINET-IO Controller (PLC). Permanent changes must be carried out here!**

Detailed information on this topic can be found in chapter 10 "Commissioning and configuration" on page 116.

5 Specifications

5.1 General specifications of the bar code readers

5.1.1 Line scanner

Type	BCL 548*i* PROFINET-IO
Type	**Line scanner without heating**
Optical data	
Light source	Laser diode λ = 650 nm / 655 nm (red light)
Beam exit	Front
Scanning rate	1000 scans/s (adjustable in the range 800 … 1200 scans/s)
Beam deflection	By means of rotating polygon wheel
Useful opening angle	Max. 60°
Optics models / resolution	High Density (**N**): 0.25 … 0.5 mm Medium Density (**M**): 0.35 … 0.8 mm Low Density (**F**): 0.5 … 1.0 mm Ultra Low Density (**L**): 0.7 … 1.0 mm
Read distance	see reading field curves
Laser safety class	2 acc. to EN 60825-1, CDRH (U.S. 21 CFR 1040.10)
Bar code data	
Code types	2/5 Interleaved, Code 39, Code 128, EAN 128, EAN / UPC, Codabar, Code 93, GS1 DataBar Omnidirectional
Bar code contrast (PCS)	>= 60 %
External light tolerance	2000 lx (on the bar code)
Number of bar codes per scan	6
Electrical data	
Interface type	2x PROFINET-IO on 2x M12 (D)
Protocols	PROFINET-IO RT-communication DCP TCP/IP (Client/ Server) / UDP
Baud rate	10/100 MBaud

Table 5.1: Specifications of the BCL 548*i* line scanners without heating

Type	BCL 548*i* PROFINET-IO
Type	**Line scanner without heating**
Data formats	
Service interface	USB 1.1 compatible, A-coded
Switching input / switching output	4 switching inputs/outputs, freely programmable functions - Switching input: 10 … 30VDC depending on supply voltage, I max. = 8mA - Switching input: 10 … 30VDC, depending on supply voltage, I max. = 60mA (short-circuit proof) Switching inputs/outputs are protected against polarity reversal!
Operating voltage	10 … 30VDC (Class II, Safety Class III)
Power consumption	Max. 10W
Operating and display elements	
Display	Monochromatic graphical display, 128 x 64 pixel, with background lighting
Keyboard	4 buttons
LEDs	2 LEDs for power (PWR) and bus state (BUS), two-colored (red/green)
Mechanical data	
Protection class	IP 65 (with screwed-on M12 connectors or mounted caps)
Weight	1.1kg
Dimensions (WxHxD)	63 x123.5 x106.5mm
Housing	diecast aluminum
Environmental data	
Operating temperature range	0°C … +40°C
Storage temperature range	-20°C … +70°C
Air humidity	Max. 90% rel. humidity, non-condensing
Vibration	IEC 60068-2-6, test FC
Shock	IEC 60068-2-27, test Ea
Continuous shock	IEC 60068-2-29, test Eb
Electromagnetic compatibility	EN 55022; IEC 61000-6-2 (contains IEC 61000-4-2, -3, -4, -5 and -6) [1)]

Table 5.1: Specifications of the BCL 548*i* line scanners without heating

1) This is a Class A product. In a domestic environment this product may cause radio interference, in which case the operator may be required to take adequate measures.

Attention!

For UL applications, use is permitted exclusively in Class 2 circuits according to NEC (National Electric Code).

The BCL 548*i* bar code readers are designed in accordance with safety class III for supply by PELV (protective extra-low voltage with reliable disconnection).

5.1.2 Oscillating-mirror scanner

Technical data same as for line scanner without heating with the following differences:

Type	BCL 548*i* PROFINET-IO
Type	**Oscillating-mirror scanner without heating**
Optical data	
Beam exit	Lateral zero position at an angle of 90°
Beam deflection	Via rotating polygon wheel (horizontal) and stepping motor with mirror (vertical)
Oscillation frequency	0 … 10 Hz (adjustable, max. frequency is dependent on set swivel angle)
Max. swivel angle	±20°(adjustable)
Reading field height	See reading field curves
Electrical data	
Power consumption	Max. 14 W
Mechanical data	
Weight	1.5 kg
Dimensions (W x H x D)	84 x 173 x 147 mm

Table 5.2: Specifications of the BCL 548*i* oscillating-mirror scanners without heating

5.1.3 Line scanner with deflection mirror

Technical data same as for line scanner without heating with the following differences:

Type	BCL 548*i* PROFINET-IO
Type	**Line scanner with deflection mirror without heating**
Optical data	
Beam exit	Lateral zero position at an angle of 90°
Beam deflection	Via rotating polygon wheel (horizontal) and deflection mirror (vertical)
Max. optical adjustment range of the beam exit	±10° (adjustable via display or software)
Electrical data	
Power consumption	Max. 11 W
Mechanical data	
Weight	1.4 kg
Dimensions (W x H x D)	84 x 173 x 147 mm

Table 5.3: Specifications of the BCL 548*i* deflection-mirror scanners without heating

5.2 Heating models of the bar code readers

The BCL 548*i* bar code readers are optionally available as models with integrated heating. In this case, heating is permanently installed ex works. Self-installation onsite by the user is not possible!

Features

- Integrated heating (permanently installed)
- Extends the application range of the BCL 548*i* to -35 °C
- Supply voltage 24 VDC ±20 %
- BCL 548*i* enabling through an internal temperature switch (switch-on delay about 30 min for 24 VDC and minimum ambient temperature of -35 °C)
- Necessary conductor cross-section for the voltage supply: at least 0.75 mm²; the use of ready-made cables is, thus, not possible.

Construction

The heating consists of two parts:

- The front cover heater
- The housing heater

Function

When the 24 VDC supply voltage is applied to the BCL 548*i*, a temperature switch initially only connects the heating to electrical power (front cover heater and housing heater). During the heating phase (around 30 min), when the inside temperature rises above 15 °C, the temperature switch connects the BCL 548*i* to the supply voltage. This is followed by the self test and the changeover to read operation. The "PWR" LED lights up showing overall readiness for operation.

When the inside temperature reaches approximately 18 °C, another temperature switch turns the housing heater off and, if necessary, back on again (if the inside temperature drops below 15 °C). This does not interrupt the read operation. The front cover heater remains activated until an inside temperature of 25 °C is reached. At temperatures above this, the front cover heater switches off and, with a switching hysteresis of 3 °C, back on again at an inside temperature below 22 °C.

Electrical connection

The required core cross-section of the connection cable for the voltage supply must be at least 0.75 mm².

Attention!

The voltage supply must not be looped through from one device to the next.

Power consumption

The energy requirement depends on the model:

- the line scanner with heating typically consumes 40W and a maximum of 50W power.
- the line scanner with oscillating mirror and heating typically consumes 60W and a maximum of 75W.

These values are based on operation with unconnected switching outputs.

5.2.1 Line scanner with heating

Technical data same as for line scanner without heating with the following differences:

Type	**BCL 548*i* PROFINET-IO**
Type	**Line scanner with heating**
Electrical data	
Operating voltage	24VDC ±20%
Power consumption	Max. 50W
Structure of the heating	Housing heating and separate heating of the optics glass
Warmup time	Min. 30min at +24VDC and an ambient temperature of -35°C
Min. conductor cross-section	Conductor cross-section of at least 0.75mm² for the supply-voltage supply line. Wiring through of the voltage supply to multiple heating devices is **not** permissible. standard, M12 ready-made cable **not** usable (insufficient conductor cross-section)
Environmental data	
Operating temperature range	-35°C … +40°C
Storage temperature range	-20°C … +70°C

Table 5.4: Specifications of the BCL 548*i* line scanners with heating

5.2.2 Oscillating-mirror scanner with heating

Technical data same as for line scanner without heating with the following differences:

Type	**BCL 548*i* PROFINET-IO**
Type	**Oscillating-mirror scanner with heating**
Optical data	
Useful opening angle	Max. 50°
Max. swivel angle	±12°(adjustable)
Electrical data	
Operating voltage	24VDC ±20%
Power consumption	Max. 75W
Structure of the heating	Housing heating and separate heating of the optics glass
Warmup time	Min. 30min at +24VDC and an ambient temperature of -35°C
Min. conductor cross-section	Conductor cross-section of at least 0.75mm² for the supply-voltage supply line. Wiring through of the voltage supply to multiple heating devices is **not** permissible. Standard, M12 ready-made cable **not** usable (insufficient conductor cross-section)
Environmental data	
Operating temperature range	-35°C … +40°C
Storage temperature range	-20°C … +70°C

Table 5.5: Specifications of the BCL 548*i* oscillating-mirror scanners with heating

5.2.3 Line scanner with deflection mirror and heating

Technical data same as for line scanner without heating with the following differences:

Type	**BCL 548*i* PROFINET-IO**
Type	**Deflection mirror scanner with heating**
Optical data	
Useful opening angle	Max. 50°
Max. adjustment range	±10°(adjustable via display or software)
Electrical data	
Operating voltage	24VDC ±20%
Power consumption	Max. 75W
Structure of the heating	Housing heating and separate heating of the optics glass
Warmup time	Min. 30min at +24VDC and an ambient temperature of -35°C
Min. conductor cross-section	Conductor cross-section of at least 0.75mm² for the supply-voltage supply line. Wiring through of the voltage supply to multiple heating devices is **not** permissible. Standard, M12 ready-made cable **not** usable (insufficient conductor cross-section)
Environmental data	
Operating temperature range	-35°C … +40°C
Storage temperature range	-20°C … +70°C

Table 5.6: Specifications of the BCL 548*i* deflection-mirror scanners with heating

5.3 Dimensioned drawings

5.3.1 Line scanner with / without heating

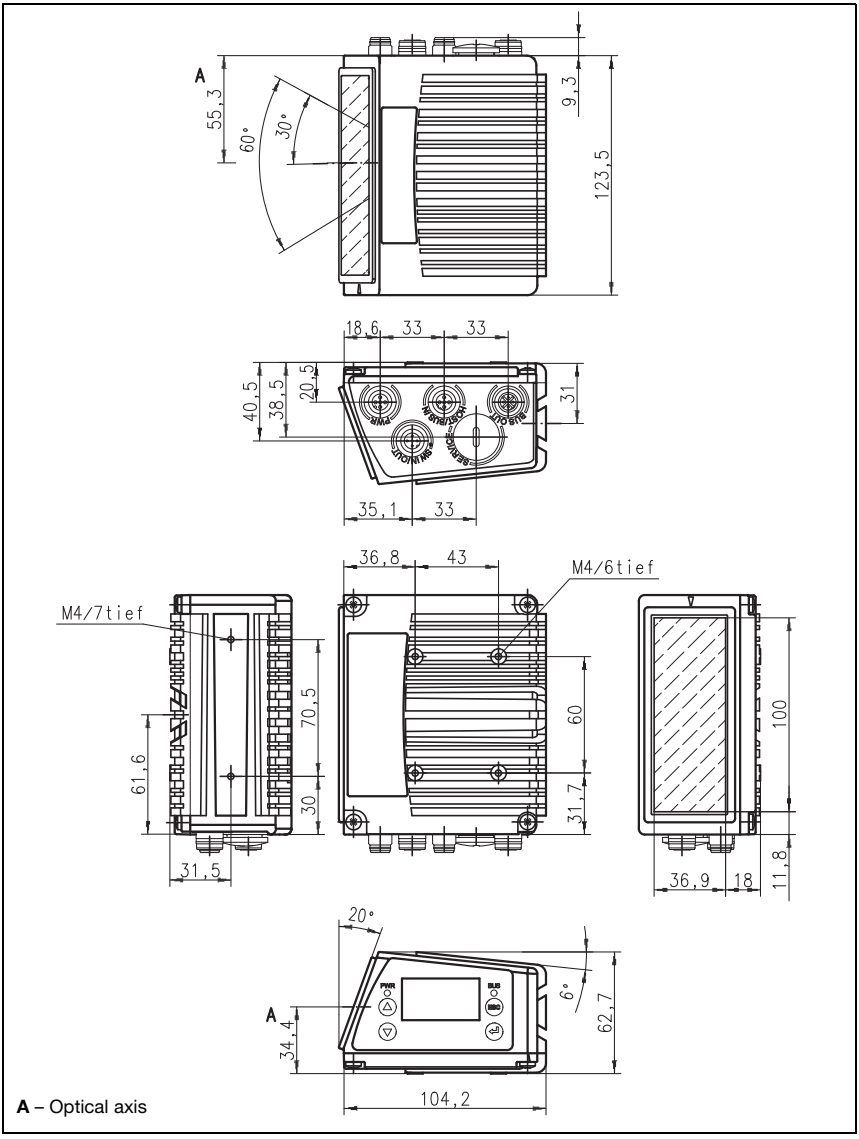

Figure 5.1: Dimensioned drawing BCL 548*i* line scanner S…102

5.3.2 Deflection mirror scanner with / without heating

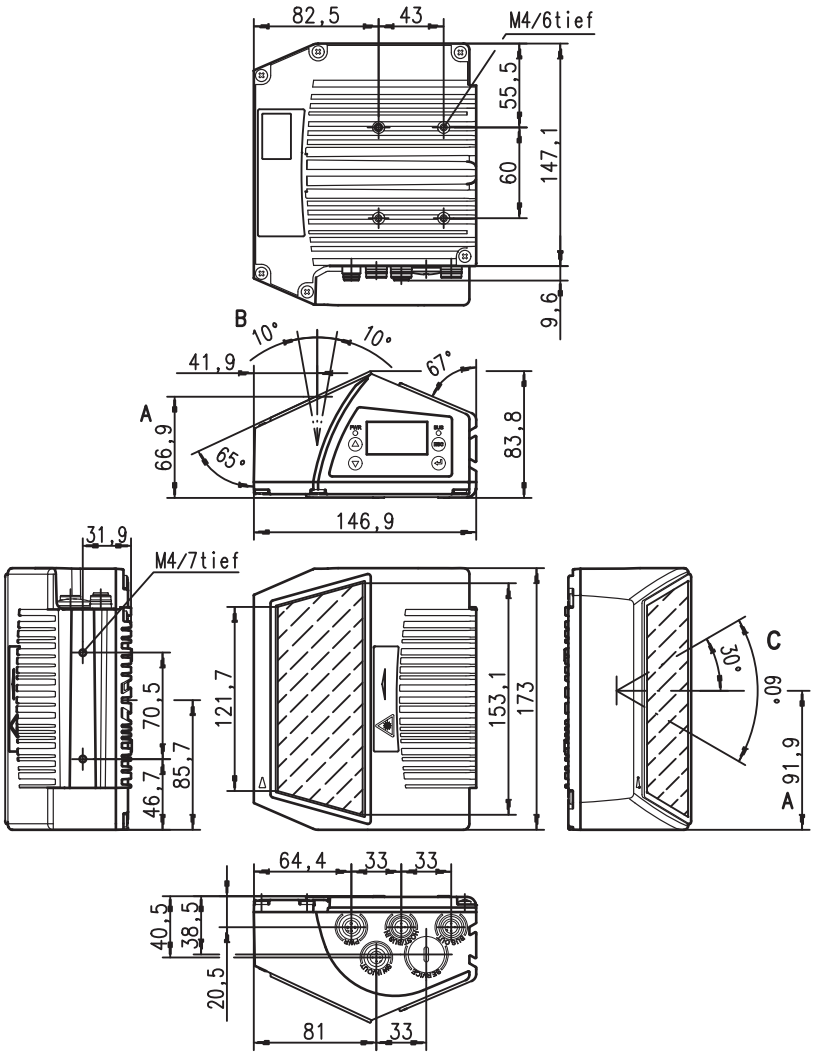

A – Optical axis
B – Optical adjustment range
C – Opening angle
The opening angle is reduced on devices with heating, see "Reading field curves for heating devices" on page 58.

Figure 5.2: Dimensioned drawing BCL 548*i* deflection-mirror scanner S…100

5.3.3 Oscillating-mirror scanner with / without heating

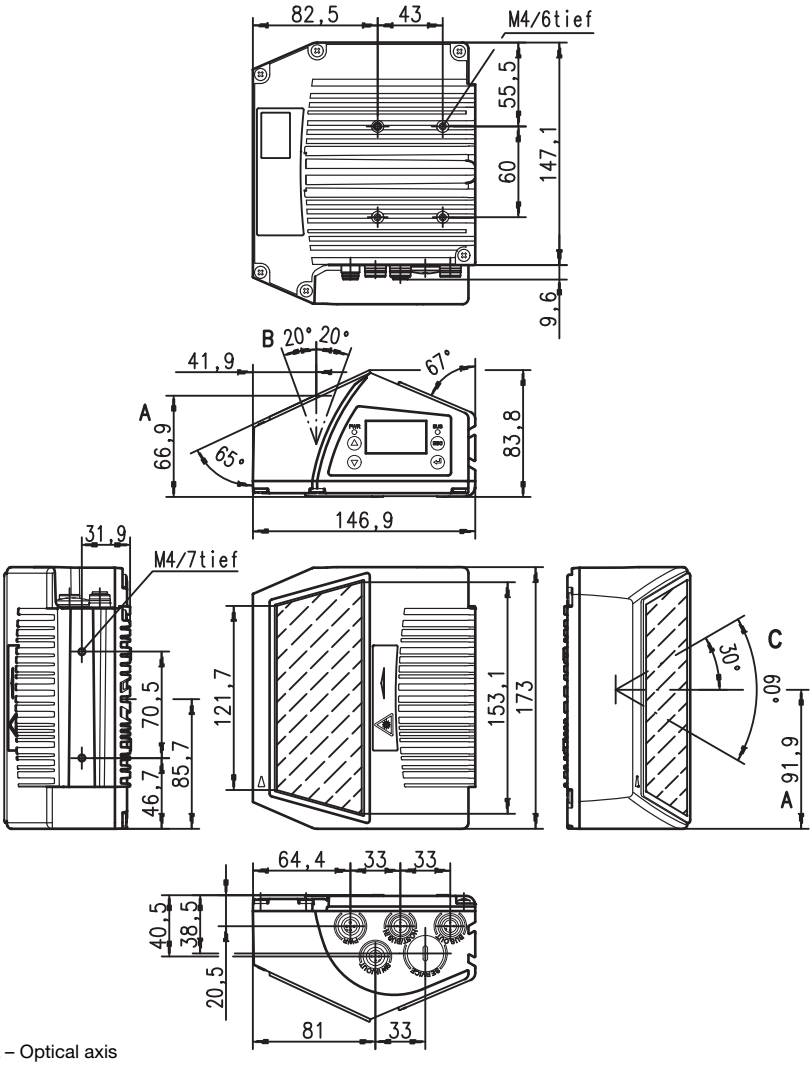

A – Optical axis
B – Optical swivel range
C – Opening angle
The optical swivel range and the opening angle are reduced on devices with heating, see "Reading field curves for heating devices" on page 58.

Figure 5.3: Dimensioned drawing BCL 548*i* oscillating-mirror scanner 0…100

5.4 Type overview BCL 548*i*

BCL 548i family

(PROFINET-IO on 2x M12 D-coded)

Type designation	Description	Part no.
High Density Optics (m = 0.25 … 0.5mm)		
BCL 548*i* SN 100	Line scanner with deflection mirror	50113185
BCL 548*i* SN 102	Line scanner, beam exit at the front	50113183
BCL 548*i* ON 100	Oscillating-mirror scanner	50113199
BCL 548*i* SN 100 H	Line scanner with deflection mirror, with heating	50113186
BCL 548*i* SN 102 H	Line scanner, beam exit at the front, with heating	50113184
BCL 548*i* ON 100 H	Oscillating-mirror scanner with heating	50113200
Medium Density Optics (m = 0.35 … 1.0mm)		
BCL 548*i* SM 100	Line scanner with deflection mirror	50113189
BCL 548*i* SM 102	Line scanner, beam exit at the front	50113187
BCL 548*i* OM 100	Oscillating-mirror scanner	50113201
BCL 548*i* SM 100 H	Line scanner with deflection mirror, with heating	50113190
BCL 548*i* SM 102 H	Line scanner, beam exit at the front, with heating	50113188
BCL 548*i* OM 100 H	Oscillating-mirror scanner with heating	50113202
Low Density Optics (m = 0.5 … 1.0mm)		
BCL 548*i* SF 100	Line scanner with deflection mirror	50113197
BCL 548*i* SF 102	Line scanner, beam exit at the front	50113195
BCL 548*i* OF 100	Oscillating-mirror scanner	50113205
BCL 548*i* SF 100 H	Line scanner with deflection mirror, with heating	50113198
BCL 548*i* SF 102 H	Line scanner, beam exit at the front, with heating	50113196
BCL 548*i* OF 100 H	Oscillating-mirror scanner with heating	50113206
Ultra Low Density Optics (m = 0.7 … 1.0mm)		
BCL 548*i* SL 102	Line scanner, beam exit at the front	50113191
BCL 548*i* OL 100	Oscillating-mirror scanner	50113203
BCL 548*i* SL 102 H	Line scanner, beam exit at the front, with heating	50113192
BCL 548*i* OL 100 H	Oscillating-mirror scanner with heating	50113204

Table 5.7: Type overview BCL 548*i*

5.5 Reading field curves / optical data

Bar code characteristics

Notice!

Please note that the size of the bar code module influences the maximum reading distance and the width of the reading field. Therefore, when selecting a mounting location and/or the bar code label, take into account the different reading characteristics of the scanner with various bar code modules.

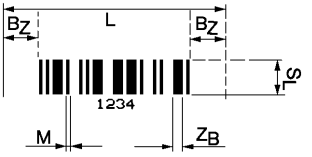

M = Module: The narrowest line or space of a bar code in mm.

Z_B = Wide element: Wide lines and spaces are a multiple (ratio) of the module.
Module x Ratio = Z_B (Normal Ratio 1 : 2.5).

B_Z = Quiet zone: The quiet zone should be at least 10 times the module, but not less than 2.5mm.

L = Code length: The length of the bar code in mm including the start and stop characters. The quiet zone is included depending on the code definition.

S_L = Bar length: Height of the elements in mm.

Figure 5.4: The most important characteristics of a bar code

The range in which the bar code can be read by the BCL 548*i* (the so-called reading field) depends on the quality of the printed bar code and its dimensions.

Therefore, above all, the module of a bar code is decisive for the size of the reading field.

Notice!

A rule of thumb: The smaller the module of the bar code is, the smaller the maximum reading distance and reading field width will be.

5.6 Reading field curves

Notice!

Please notice that the real reading fields are also influenced by factors such as labeling material, printing quality, scanning angle, printing contrast etc., and may thus deviate from the reading fields specified here.

The zero position of the reading distance always refers the front edge of the housing of the beam exit and is shown in figure 5.5 for the two housing types of the BCL 548*i*.

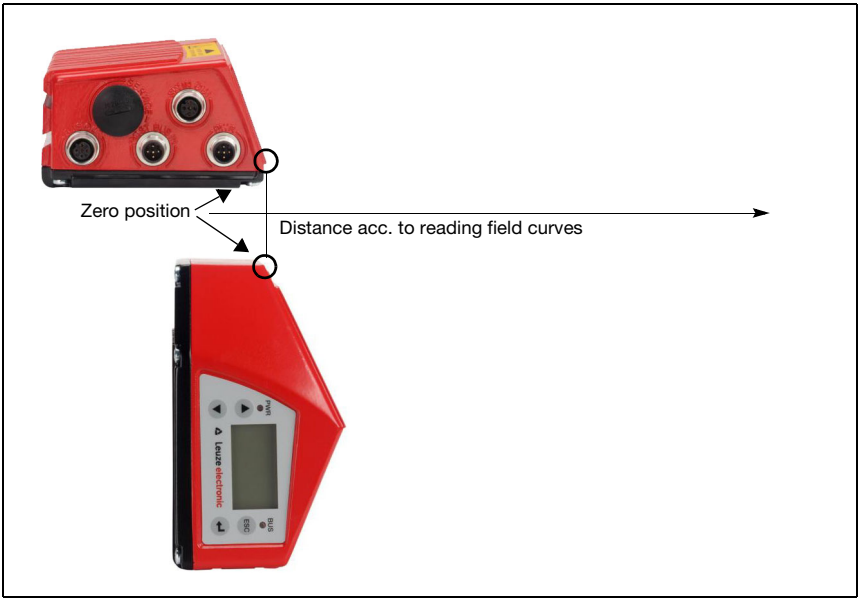

Figure 5.5: Zero position of the reading distance

Reading conditions for the reading field curves

Bar code type	2/5 Interleaved
Ratio	1:2,5
ANSI specification	class A
Reading rate	> 75%

Table 5.8: Reading conditions

5.6.1 High Density (N) Optics: BCL 548*i* SN 100/102

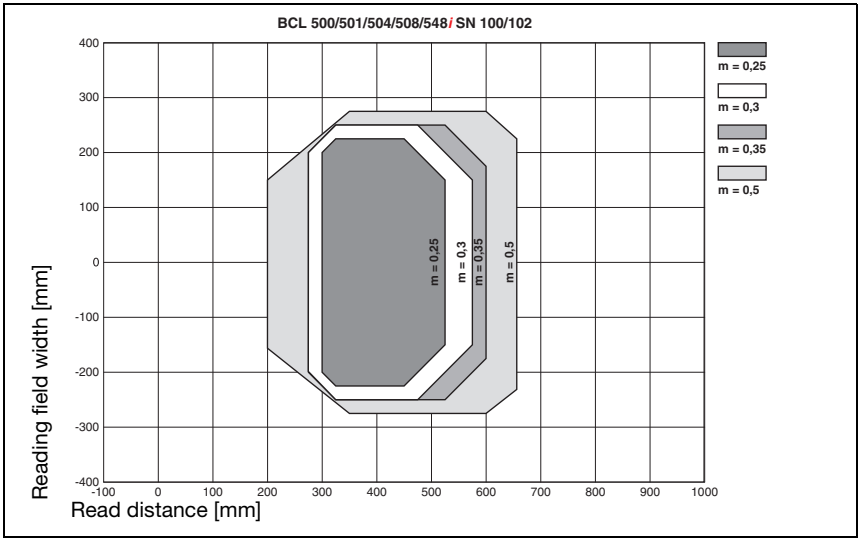

Figure 5.6: "High Density" reading field curve for line scanner (with/without deflection mirror)

The reading field curve applies for the reading conditions stated in table 5.8.

5.6.2 High Density (N) Optics: BCL 548*i* ON 100

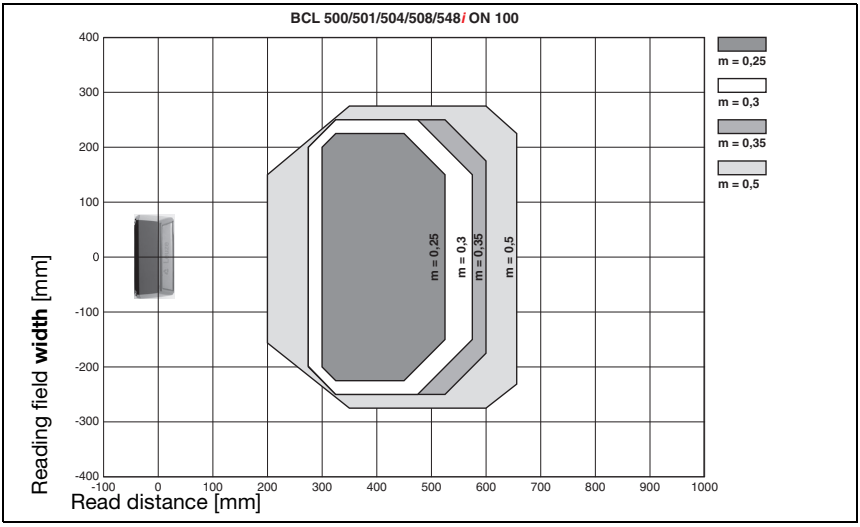

Figure 5.7: "High Density" reading field curve for oscillating-mirror scanners

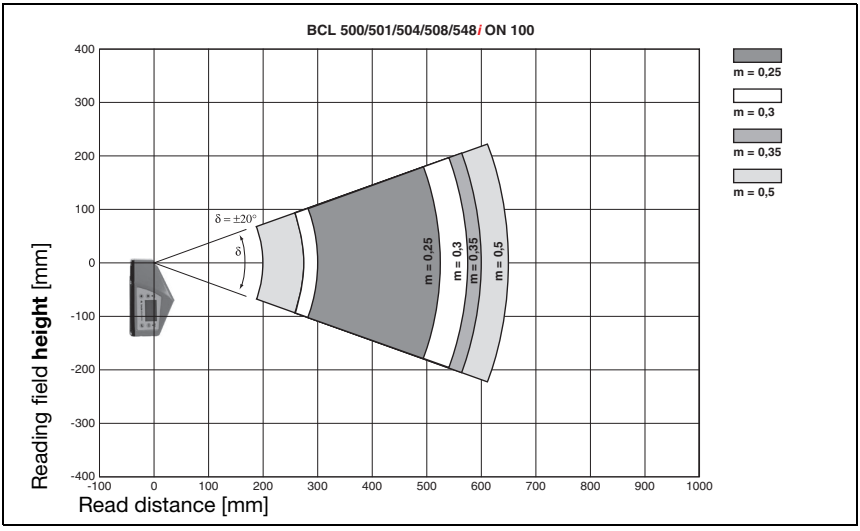

Figure 5.8: Lateral "High Density" reading field curve for oscillating-mirror scanners

The reading field curves apply for the reading conditions stated in table 5.8.

5.6.3 Medium Density (M) Optics: BCL 548*i* SM 100/102

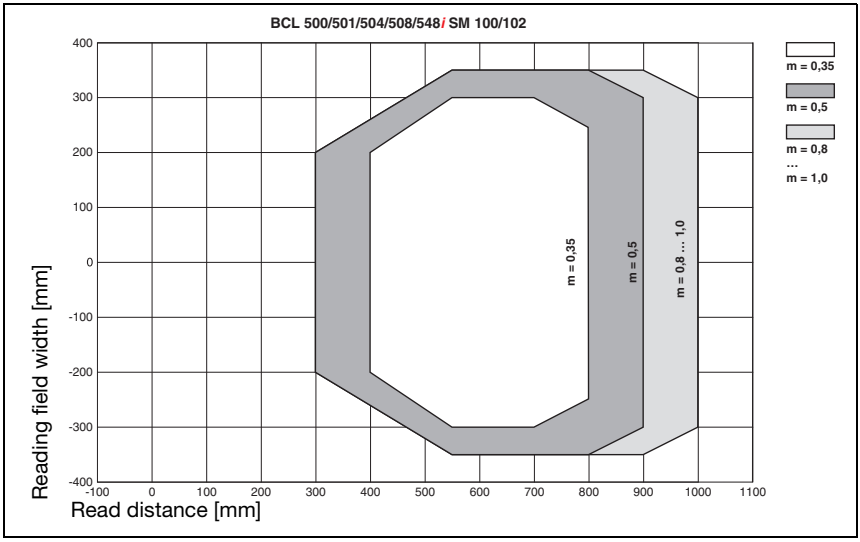

Figure 5.9: "Medium Density" reading field curve for line scanner (with/without deflection mirror)

The reading field curves apply for the reading conditions stated in table 5.8.

5.6.4 Medium Density (M) Optics: BCL 548*i* OM 100

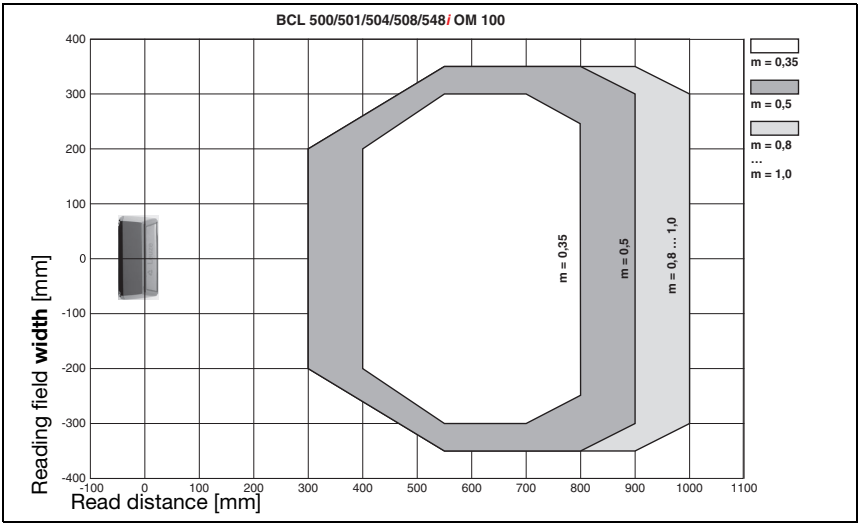

Figure 5.10: "Medium Density" reading field curve for oscillating-mirror scanners

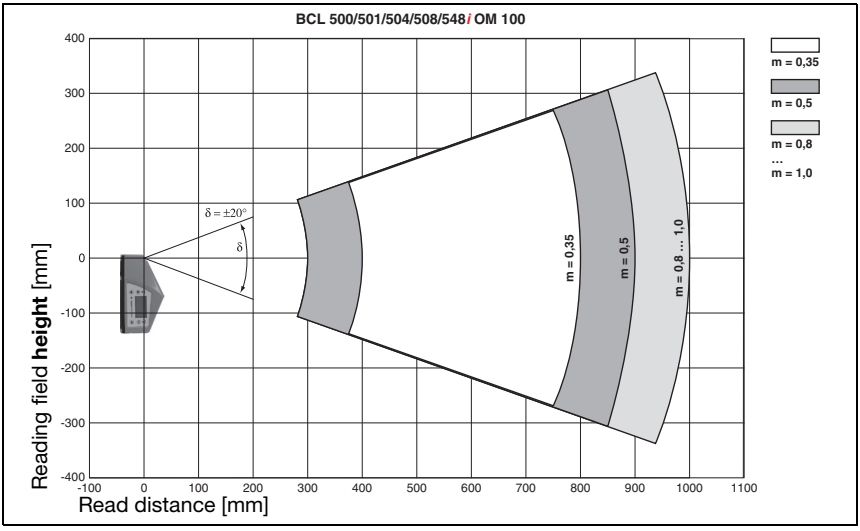

Figure 5.11: Lateral "Medium Density" reading field curve for oscillating-mirror scanners

The reading field curves apply for the reading conditions stated in table 5.8.

5.6.5 Low Density (F) Optics: BCL 548*i* SF 100/102

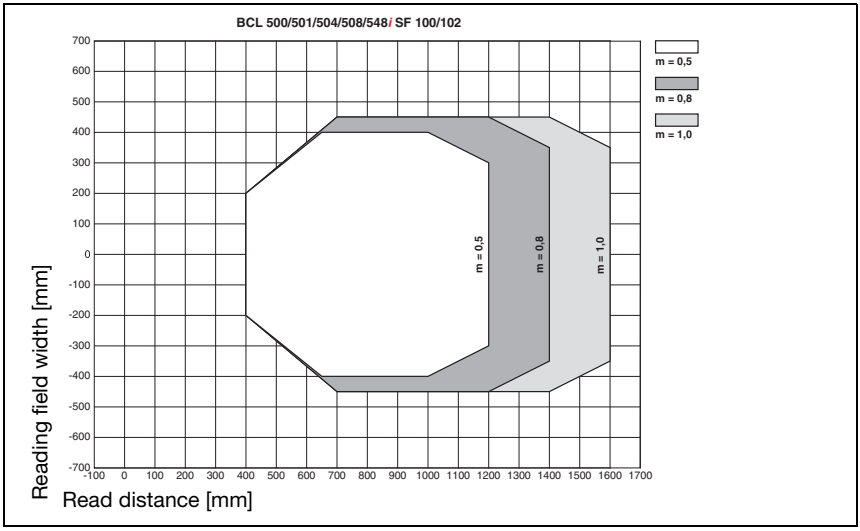

Figure 5.12: "Low Density" reading field curve for line scanner (with/without deflection mirror)

The reading field curves apply for the reading conditions stated in table 5.8.

5.6.6 Low Density (F) Optics: BCL 548*i* OF 100

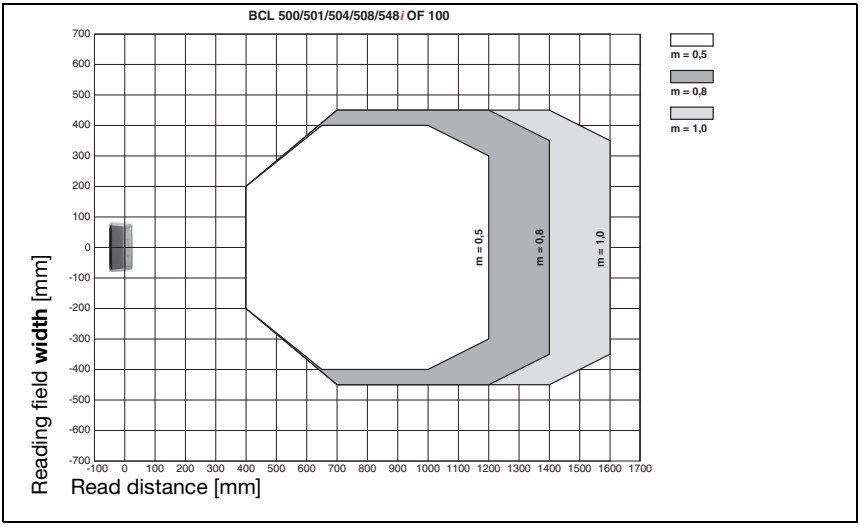

Figure 5.13: "Low Density" reading field curve for oscillating-mirror scanners

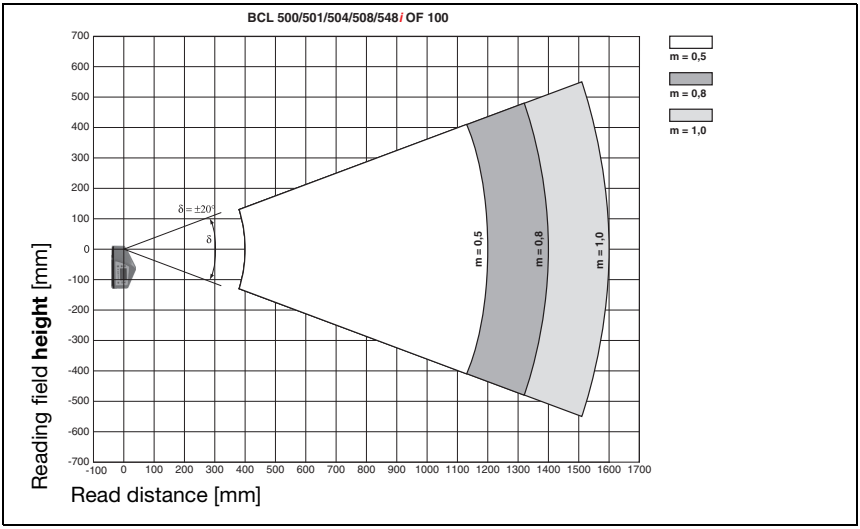

Figure 5.14: Lateral "Low Density" reading field curve for oscillating-mirror scanners

The reading field curves apply for the reading conditions stated in table 5.8.

5.6.7 Ultra Low Density (L) Optics: BCL 548*i* SL 102

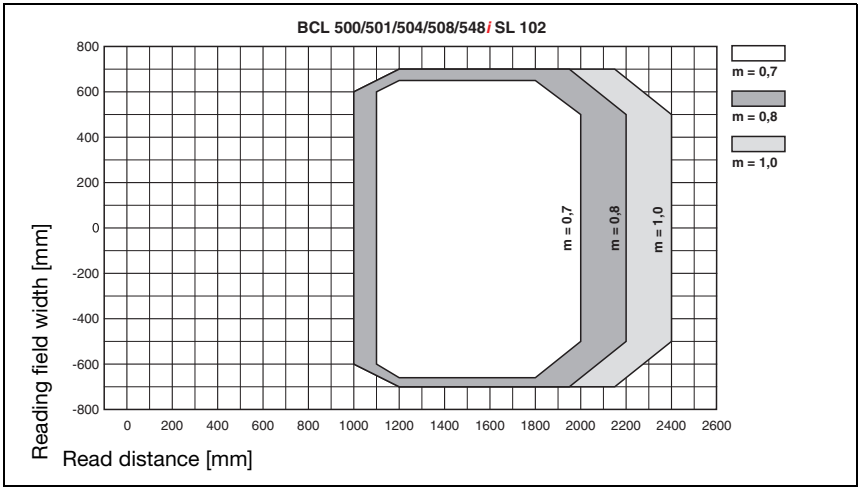

Figure 5.15: "Ultra Low Density" reading field curve for line scanner without deflection mirror

The reading field curves apply for the reading conditions stated in table 5.8.

5.6.8 Ultra Low Density (L) Optics: BCL 548*i* OL 100

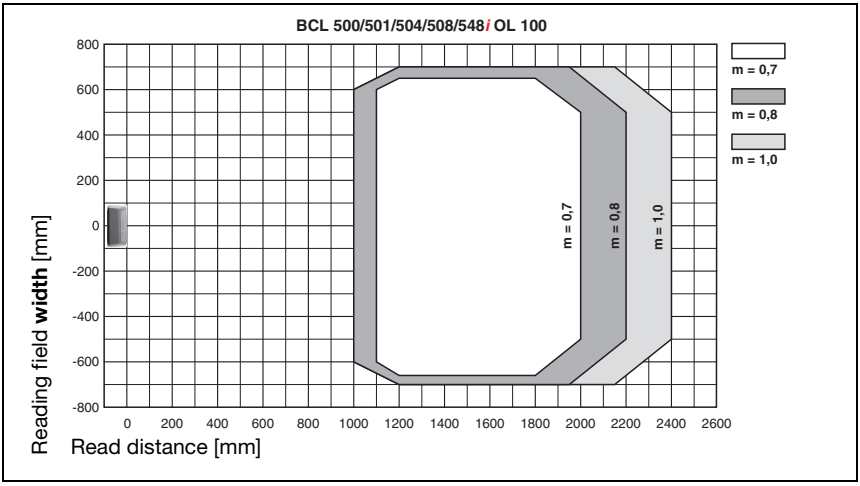

Figure 5.16: "Ultra Low Density" reading field curve for oscillating-mirror scanners

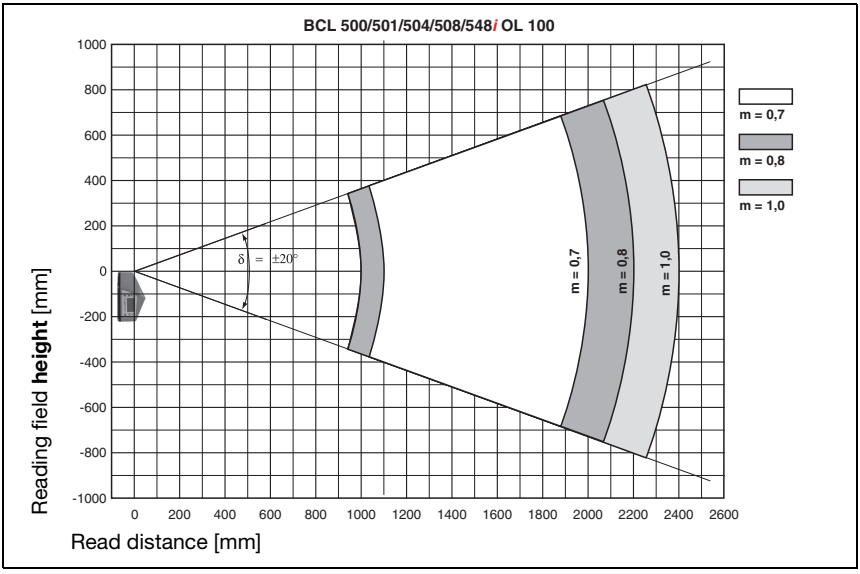

Figure 5.17: Lateral "Ultra Low Density" reading field curve for oscillating-mirror scanners

The reading field curves apply for the reading conditions stated in table 5.8.

5.7 Reading field curves for heating devices

The reading field curves of the heating devices differ to some extent from the normal reading curves due to the optics heating and are somewhat reduced in the reading field width as well as in the reading field height!

- **The maximum opening angle** for all oscillating and deflection mirror devices (BCL 548*i*…**100 H**) **is reduced to ±28°** (without heating = ±30°).
- **In addition, the maximum swivel range** for all oscillating mirror devices (BCL 548*i* **O**…**100 H**) **is reduced to ±12°** (without heating = ±20°). The deflection mirror models (BCL 548*i* **S**…**100 H**) are not affected by this limitation.
- The reading field curves and opening angles are unchanged for all line scanners with heating (BCL 548*i* **S**…**102 H**).

For details, please refer to the following reading field curves for the heating devices.

5.7.1 High Density (N) Optics: BCL 548*i* SN 102 H

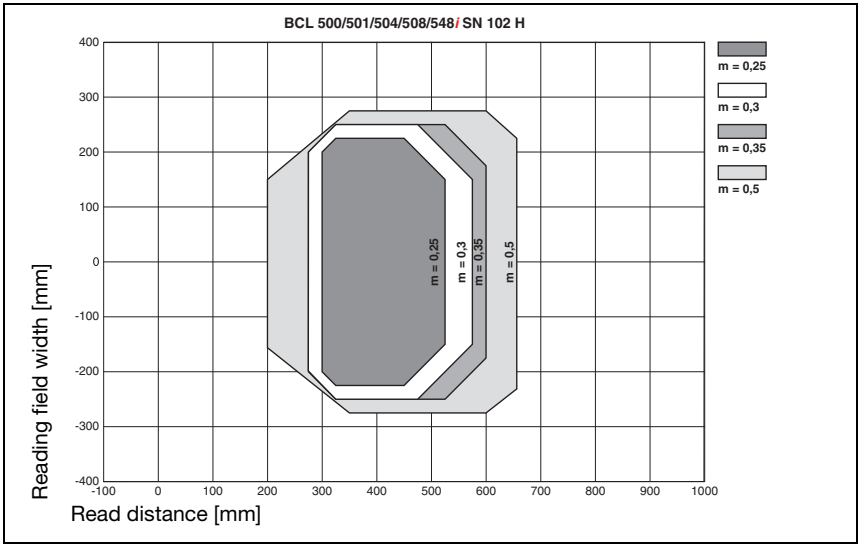

Figure 5.18: "High Density" reading field curve for line scanner with heating (without deflection mirror)

The reading field curve applies for the reading conditions stated in table 5.8.

5.7.2 High Density (N) Optics: BCL 548*i* SN 100 H

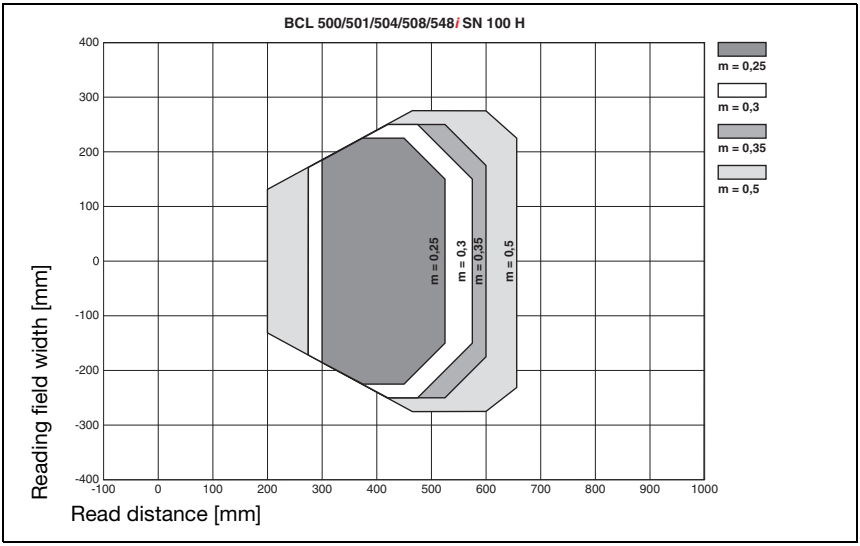

Figure 5.19: "High Density" reading field curve for line scanner with heating (with deflection mirror)

The reading field curve applies for the reading conditions stated in table 5.8.

5.7.3 High Density (N) Optics: BCL 548*i* ON 100 H

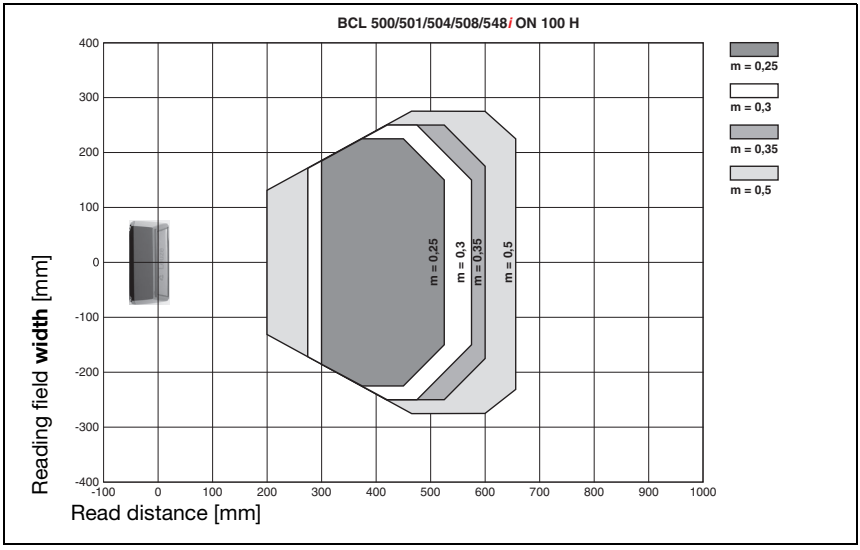

Figure 5.20: "High Density" reading field curve for oscillating-mirror scanners with heating

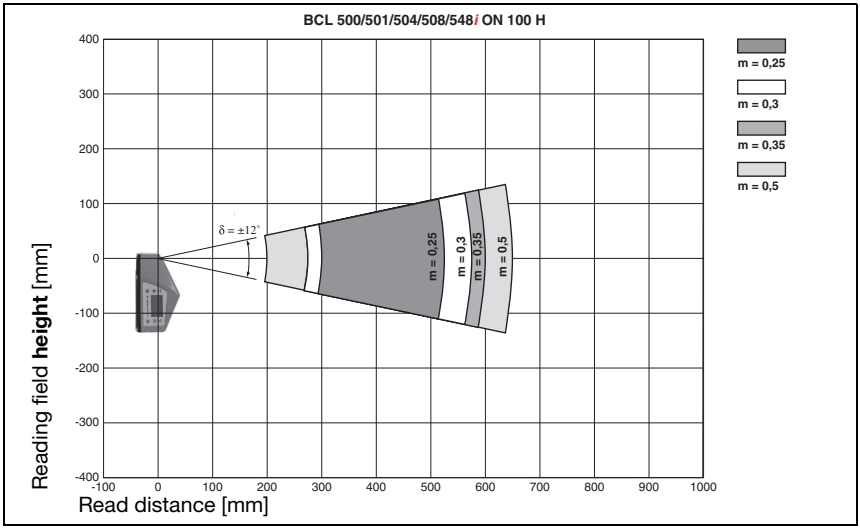

Figure 5.21: Lateral "High Density" reading field curve for oscillating-mirror scanners with heating

The reading field curves apply for the reading conditions stated in table 5.8.

5.7.4 Medium Density (M) Optics: BCL 548*i* SM 102 H

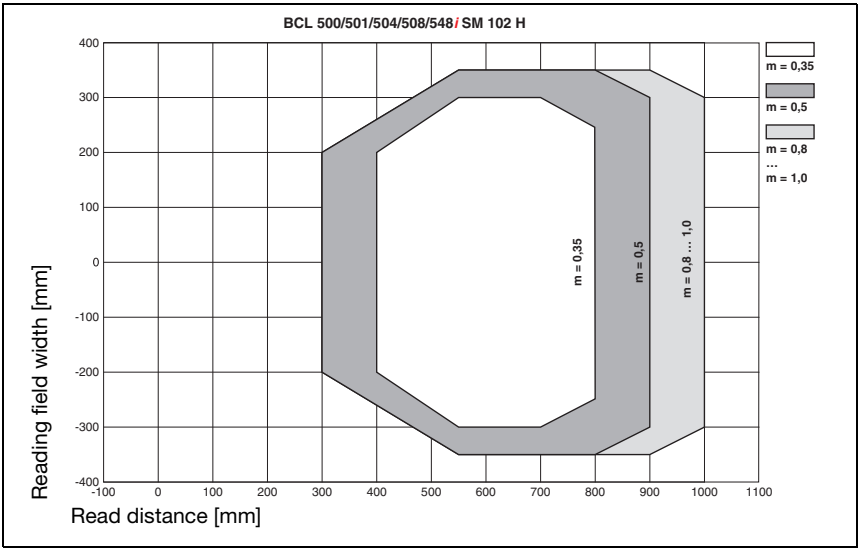

Figure 5.22: "Medium Density" reading field curve for line scanner with heating (without deflection mirror)

The reading field curves apply for the reading conditions stated in table 5.8.

5.7.5 Medium Density (M) Optics: BCL 548*i* SM 100 H

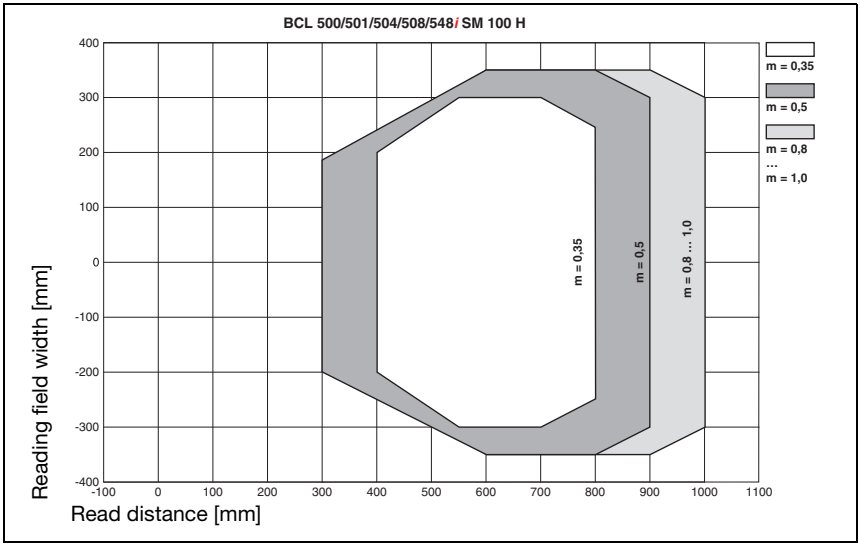

Figure 5.23: "Medium Density" reading field curve for line scanner with heating (with deflection mirror)

The reading field curves apply for the reading conditions stated in table 5.8.

5.7.6 Medium Density (M) Optics: BCL 548*i* OM 100 H

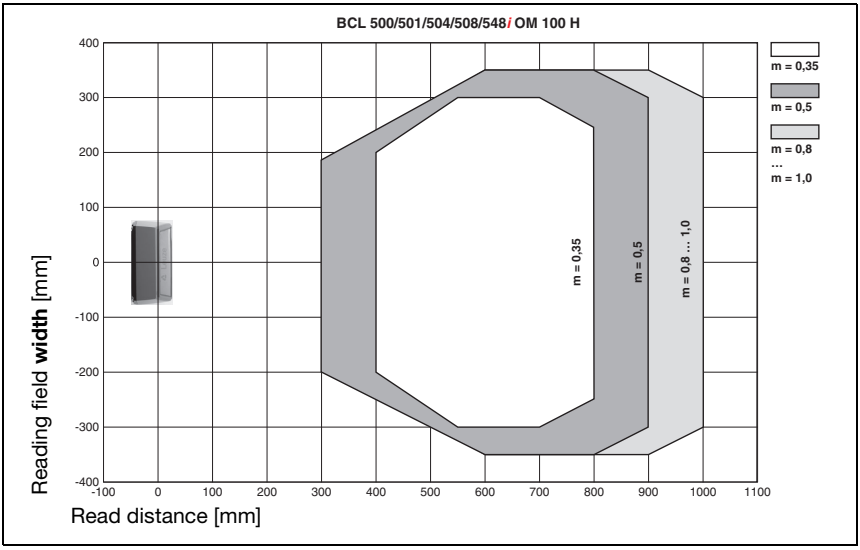

Figure 5.24: "Medium Density" reading field curve for oscillating-mirror scanners with heating

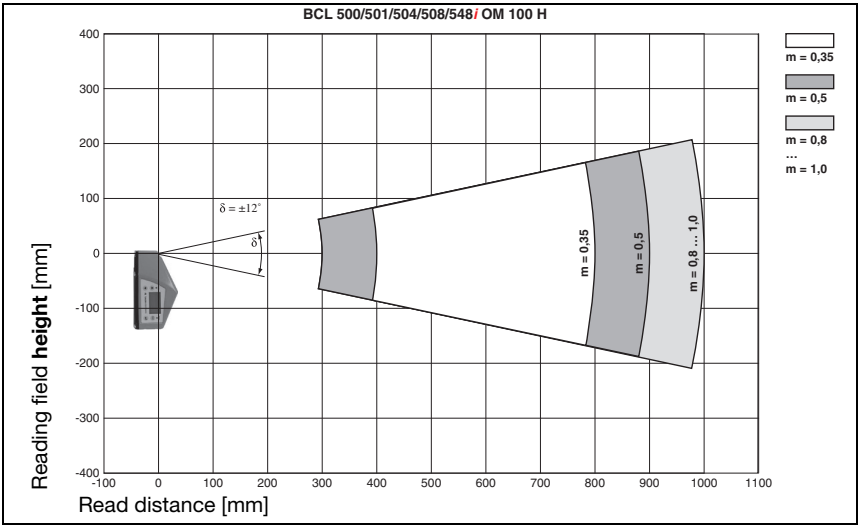

Figure 5.25: Lateral "Medium Density" reading field curve for oscillating-mirror scanners with heating

The reading field curves apply for the reading conditions stated in table 5.8.

5.7.7 Low Density (F) Optics: BCL 548*i* SF 102 H

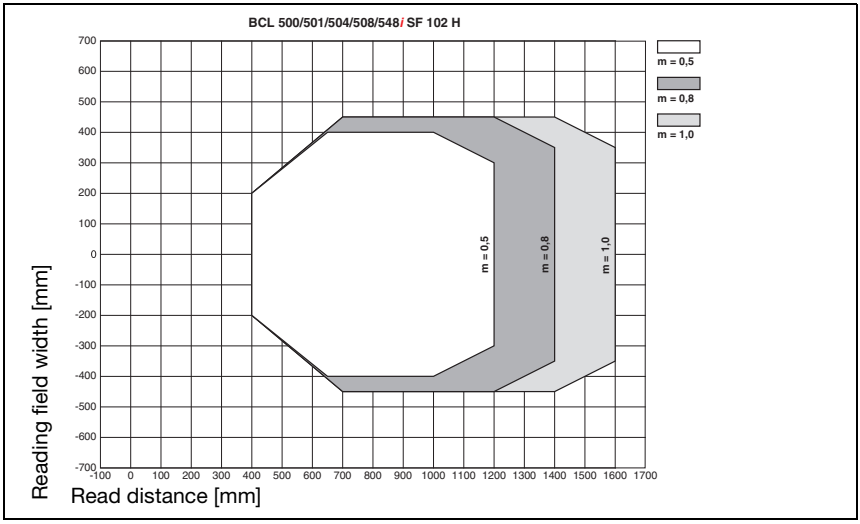

Figure 5.26: "Low Density" reading field curve for line scanner with heating (without deflection mirror)

The reading field curves apply for the reading conditions stated in table 5.8.

5.7.8 Low Density (F) Optics: BCL 548*i* SF 100 H

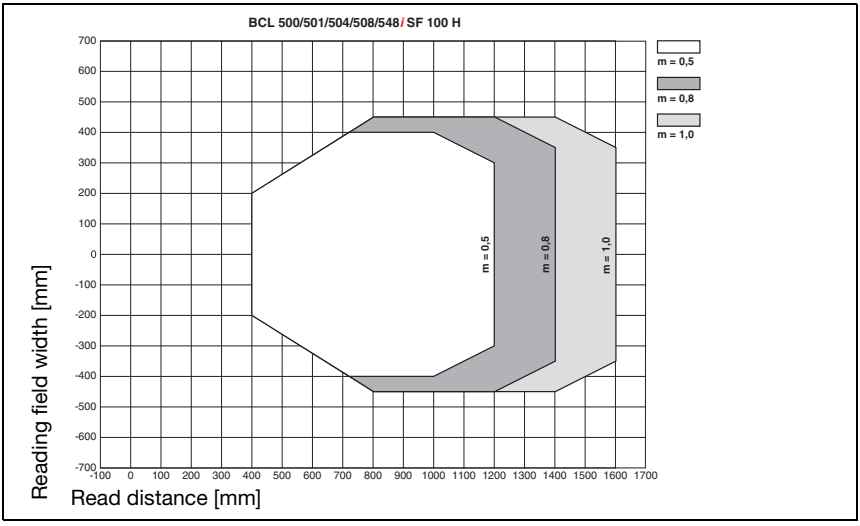

Figure 5.27: "Low Density" reading field curve for line scanner with heating (with deflection mirror)

The reading field curves apply for the reading conditions stated in table 5.8.

5.7.9 Low Density (F) Optics: BCL 548*i* OF 100 H

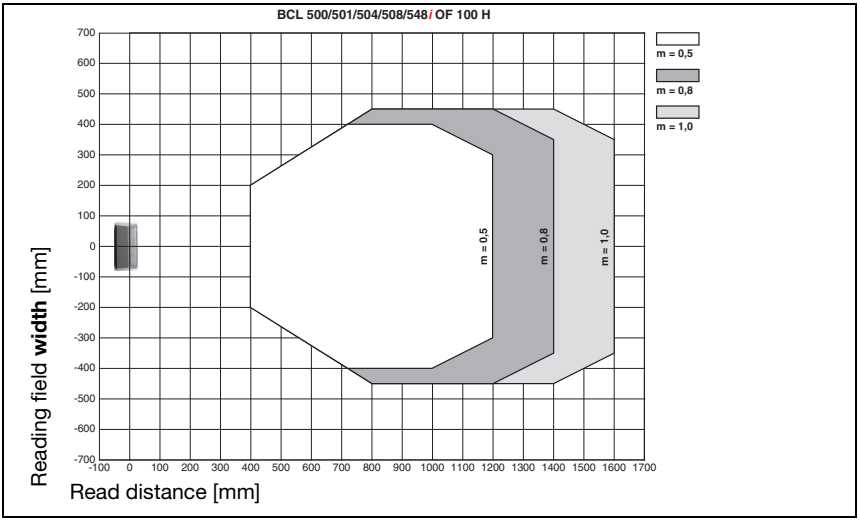

Figure 5.28: "Low Density" reading field curve for oscillating-mirror scanners with heating

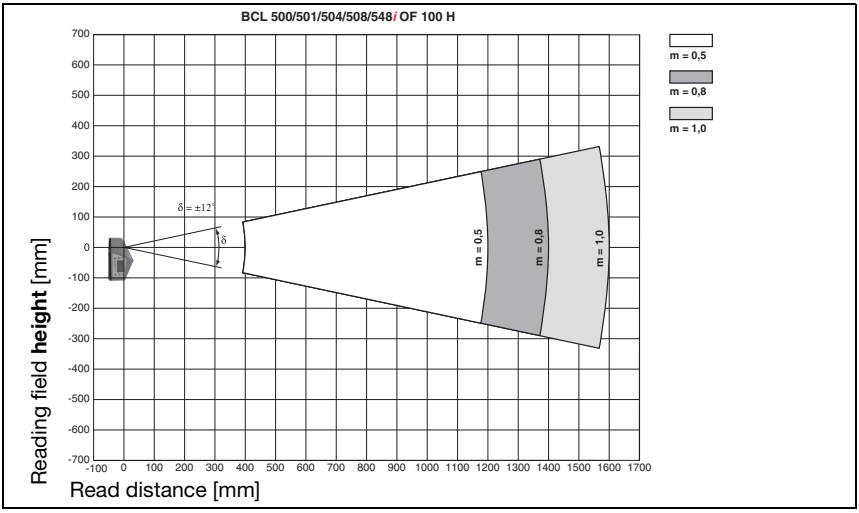

Figure 5.29: Lateral "Low Density" reading field curve for oscillating-mirror scanners with heating

The reading field curves apply for the reading conditions stated in table 5.8.

5.7.10 Ultra Low Density (L) Optics: BCL 548*i* SL 102 H

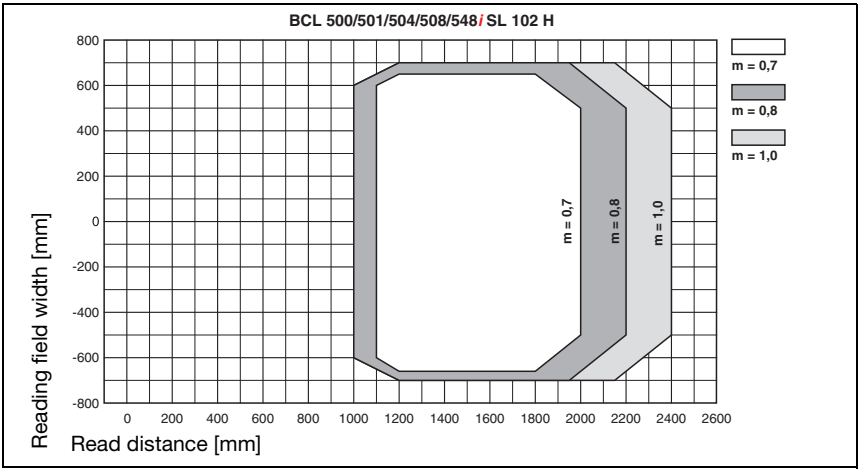

Figure 5.30: "Ultra Low Density" reading field curve for line scanner with heating (without deflection mirror)

The reading field curves apply for the reading conditions stated in table 5.8.

5.7.11 Ultra Low Density (L) Optics: BCL 548*i* OL 100 H

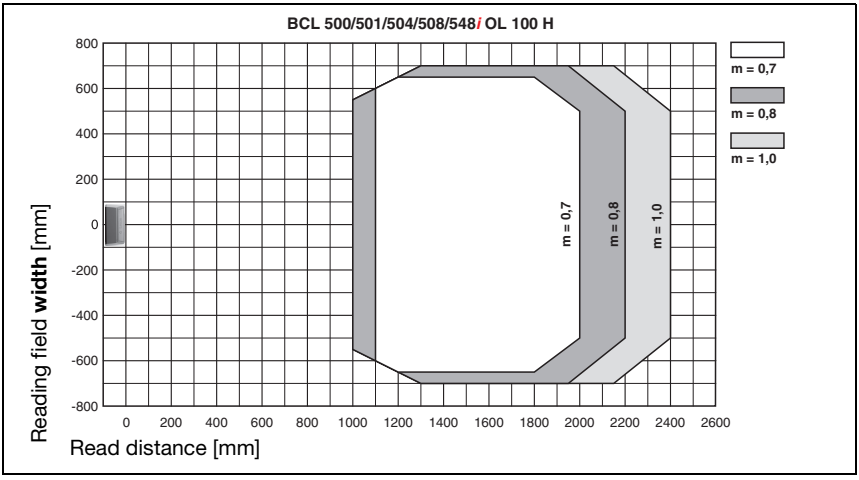

Figure 5.31: "Ultra Low Density" reading field curve for oscillating-mirror scanners with heating

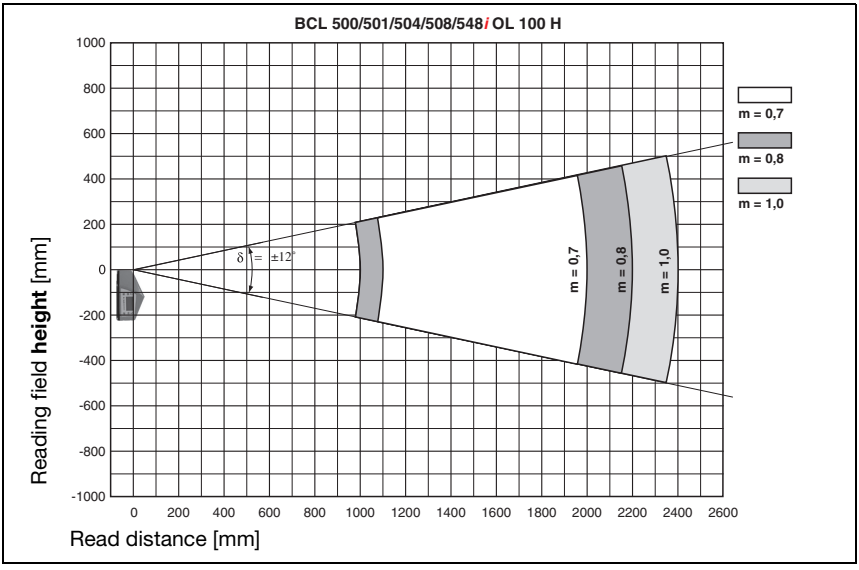

Figure 5.32: Lateral "Ultra Low Density" reading field curve for oscillating-mirror scanners with heating

The reading field curves apply for the reading conditions stated in table 5.8.

6 Installation and mounting

6.1 Storage, transportation

Attention!

When transporting or storing, package the device so that it is protected against collision and humidity. Optimum protection is achieved when using the original packaging. Heed the required environmental conditions specified in the technical data.

Unpacking

- *Check the packaging for any damage. If damage is found, notify the post office or shipping agent as well as the supplier.*
- *Check the delivery contents using your order and the delivery papers:*
  - Delivered quantity
  - Device type and model as indicated on the nameplate
  - Laser warning signs
  - Brief manual

The name plate provides information as to what BCL type your device is. For specific information, please refer to chapter 5.

Name plates of the bar code readers of the BCL 500i series

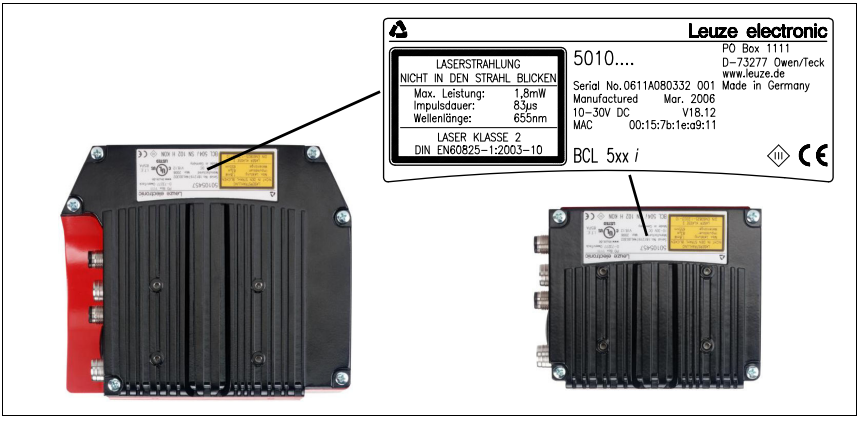

Figure 6.1: Device name plate BCL 548*i*

- *Save the original packaging for later storage or shipping.*

If you have any questions concerning your shipment, please contact your supplier or your local Leuze electronic sales office.

- *Observe the applicable local regulations when disposing of the packaging materials.*

6.2 Mounting the BCL 548*i*

The BCL 548*i* bar code readers can be mounted in two different ways:

- Using two M4x6 screws on the rear of the device or using four M4x6 screws on the bottom of the device.
- Using a BT 56 mounting device on the two fastening grooves.

6.2.1 Fastening with M4 x 6 screws

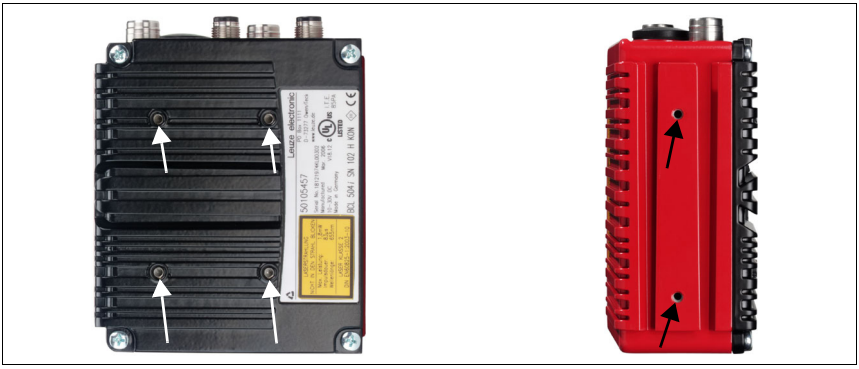

Figure 6.2: Fastening options using M4x6 threaded holes

6.2.2 BT 56 mounting device

The BT 56 mounting device is available for mounting the BCL 548*i* using the fastening grooves. It is designed for rod installation (Ø 16mm to 20mm). For ordering instructions, please refer to chapter "Type overview and accessories" on page 227.

BT 56 mounting device

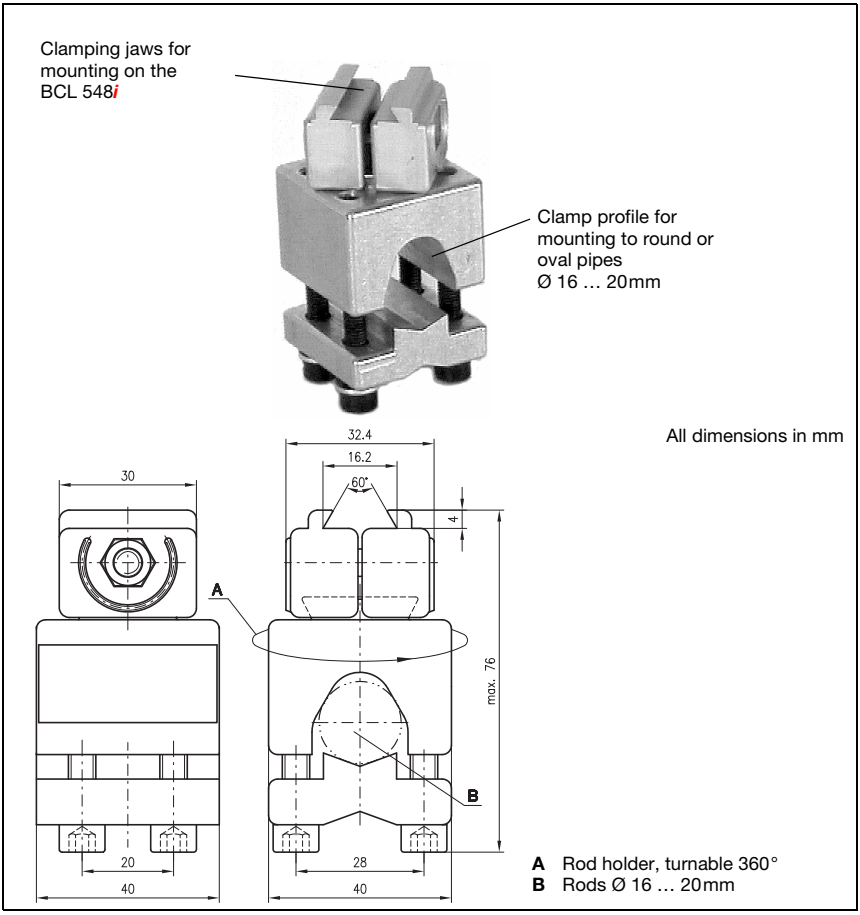

Figure 6.3: BT 56 mounting device

Figure 6.4: Mounting example of BCL 548*i* with BT 56

6.2.3 BT 59 mounting device

The BT 59 mounting device offers you an additional fastening option. For ordering instructions, please refer to chapter "Type overview and accessories" on page 227.

BT 59 mounting device

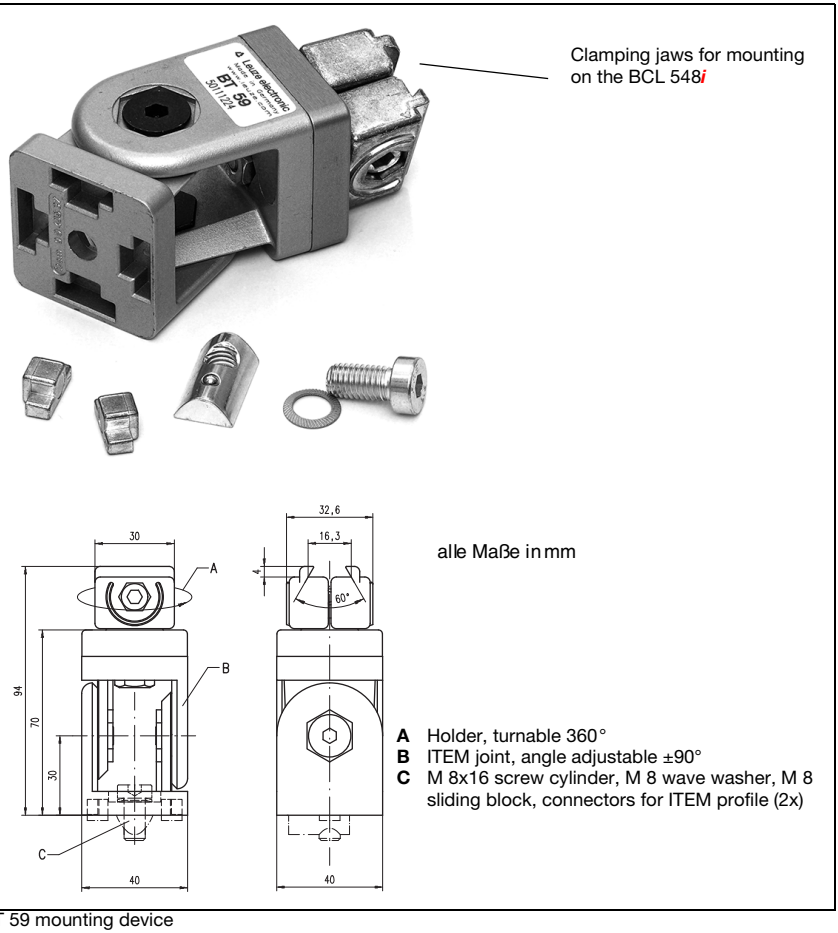

BT 59 mounting device

Notice!

When mounting, ensure that the scanning beam is not reflected directly back to the scanner by the label which is being read. For further information, see the notices in chapter 6.3! Please refer to chapter 5.6 for the permissible minimum and maximum distances between the BCL 548i and the labels to be read.

6.3 Device arrangement

6.3.1 Selecting a mounting location

In order to select the right mounting location, several factors must be considered:

- Size, orientation, and position tolerance of the bar codes on the objects to be scanned.
- The reading field of the BCL 548*i* in relation to the bar code module width.
- The resulting minimum and maximum reading distance from the respective reading field (see chapter 5.5 "Reading field curves / optical data").
- The permissible cable lengths between the BCL 548*i* and the host system depending on which interface is used.
- The correct time for data output. The BCL 548*i* should be positioned in such a way that, taking into consideration the time required for data processing and the conveyor belt speed, there is sufficient time to e.g. initiate sorting operations on the basis of the read data.
- The display and control panel should be very visible and accessible.
- For configuring and commissioning with the webConfig tool, the USB interface should be easily accessible.

For specific information, please refer to chapter 4.4.

Notice!

The beam exits the BCL 548i as follows for the respective devices:
*- line scanner **parallel** to the **housing base***
*- oscillating mirror and deflection mirror **perpendicular** to the **housing base***
The black areas in figure 6.1 are the housing base. The best read results are obtained when:

- *The BCL 548i is mounted in such a way that the scanning beam is incident on the bar code at an angle of inclination greater than ±10° … 15° to vertical.*
- *The reading distance lies in the middle area of the reading field.*
- *The bar code labels are of good print quality and have good contrast ratios.*
- *You do not use high-gloss labels.*
- *There is no direct sunlight.*

6.3.2 Avoiding total reflection – Line scanner

The bar code label must be positioned at an angle of inclination greater than ±10° … 15° from vertical in order to avoid total reflection of the laser beam (see figure 6.5)!

Total reflection occurs whenever the laser light of the bar code reader is directly incident on the surface of the bar code at an angle of 90°. The light directly reflected by the bar code may overload the bar code reader and thereby cause non-readings!

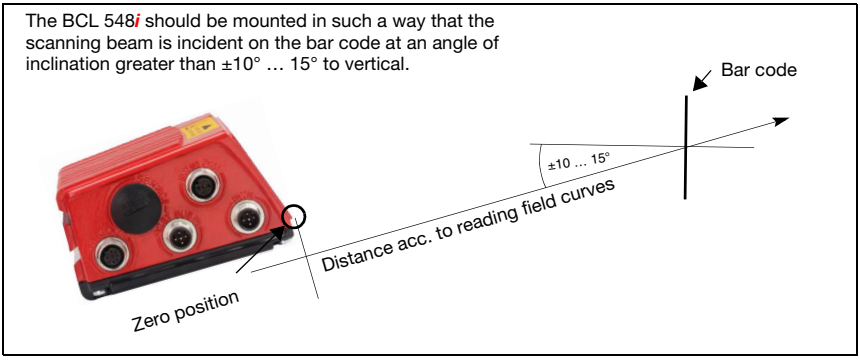

Figure 6.5: Total reflection – line scanner

6.3.3 Avoiding total reflection – oscillating/deflection-mirror scanner

For the BCL 548*i* with **oscillating/deflection mirror**, the laser beam exits at an angle of **90° to vertical**.

For the BCL 548*i* with **deflection mirror**, it is also possible to **use software to adjust the direction of the beam by ±10°**.

For the BCL 548*i* with **oscillating mirror**, the **swivel range of ±20°** (±12° for devices with heating) **is to be taken into account**.

This means that in order to be on the safe side and to avoid total reflection, the BCL 548*i* with oscillating/deflection mirror must be inclined upward or downward 20° … 30°!

Notice!

Mount the BCL 548i with oscillating/deflection mirror in such a way that the outlet window of the bar code reader is parallel to the object. This will result in an angle of inclination of approx. 25°.

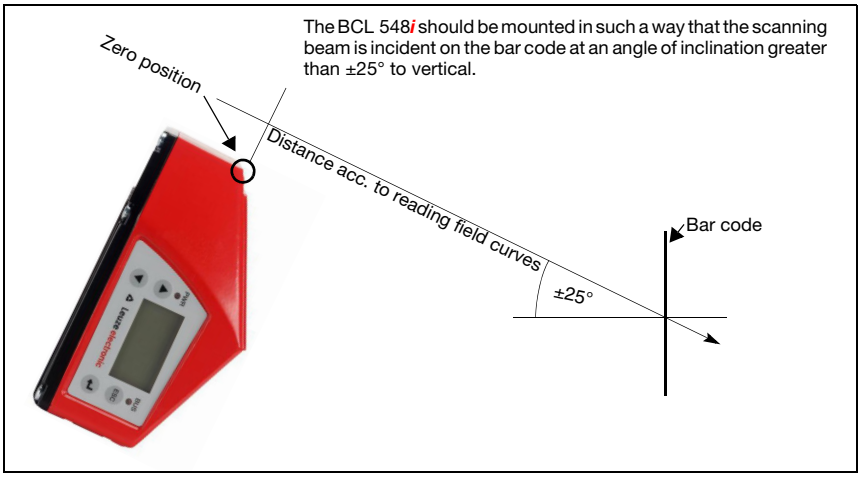

Figure 6.6: Total reflection – BCL 548*i* with oscillating/deflection mirror

6.3.4 Mounting location

When selecting a mounting location, pay attention to:

- *Maintaining the required environmental conditions (temperature, humidity).*
- *Possible soiling of the reading window due to liquids, abrasion by boxes, or packaging material residues.*
- *Lowest possible chance of damage to the BCL 548i by mechanical collision or jammed parts.*
- *Possible extraneous light (no direct sunlight or sunlight reflected by the bar code).*

6.3.5 Devices with integrated heating

For devices with integrated heating, also observe the following points:

- Mount the BCL 548*i* in a way which provides maximum thermal isolation, e.g. using rubber-bonded metal.
- Mount in such a way that the device is protected from draft and wind; mount additional shields if necessary.

Notice!

When installing the BCL 548i in a protective housing, it must be ensured that the scanning beam can exit the protective housing without obstruction.

6.3.6 Possible read angles between BCL 548*i* and bar code

The optimum alignment of the BCL 548*i* is accomplished when the scan line scans the code bars almost at a right angle (90°). All read angles that are possible between the scan line and bar code must be taken account (figure 6.7).

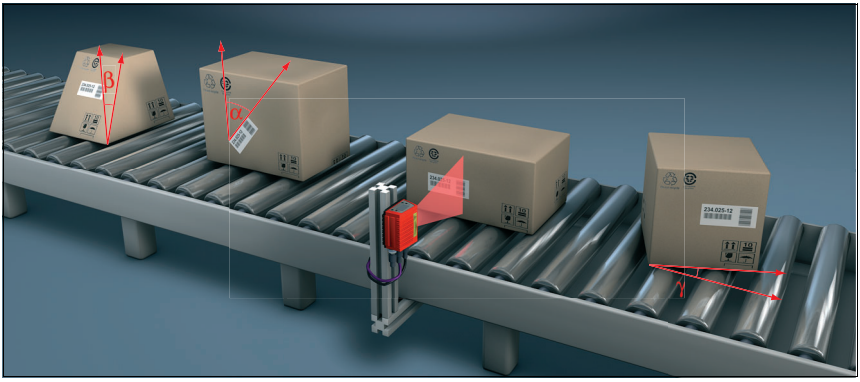

Figure 6.7: Reading angle for the line scanner

α Tilt

β Angle of inclination (Pitch)

γ Skew

In order to avoid total reflection, the skew γ should be greater than 10°

6.4 Attaching laser warning sign

Attention Laser!

Follow the safety notices in chapter 2.

↳ *It is important that you attach the sticky labels supplied to the device (laser warning signs and laser emission symbol)! If the signs would be covered due to the installation situation of the BCL 548i, attach them instead in the immediate vicinity of the BCL 548i in such a way that it is not necessary to look into the laser beam when reading the notices!*

6.5 Cleaning

↳ *Clean the glass window of the BCL 548i with a soft cloth after mounting. Remove all packaging remains, e.g. carton fibers or Styrofoam balls. In doing so, avoid leaving fingerprints on the front cover of the BCL 548i.*

Attention!

Do not use aggressive cleaning agents such as thinner or acetone for cleaning the device.

7 Electrical connection

The BCL 548*i* bar code readers are connected using variously coded M12 connectors. This ensures unique connection assignments.

The additional USB interface is used for configuring the device.

For the locations of the individual device connections, please refer to the device detail shown below.

Notice!

The corresponding mating connectors and ready-made cables are available as accessories for all cables. For additional information, refer to chapter chapter 13.

Figure 7.1: Location of the electrical connections

7.1 Safety notices for the electrical connection

Attention!

Do not open the device yourself under any circumstances! There is otherwise a risk of uncontrolled emission of laser radiation from the device. The housing of the BCL 548i contains no parts that need to be adjusted or maintained by the user.

Before connecting the device, be sure that the supply voltage agrees with the value printed on the name plate.

Connection of the device and cleaning must only be carried out by a qualified electrician.

Ensure that the functional earth (FE) is connected correctly. Unimpaired operation is only guaranteed when the functional earth is connected properly.

If faults cannot be corrected, the device should be removed from operation and protected against possible use.

Attention!

For UL applications, use is permitted exclusively in Class 2 circuits according to NEC (National Electric Code).

The BCL 548*i* bar code readers are designed in accordance with safety class III for supply by PELV (protective extra-low voltage with reliable disconnection).

Notice!

Protection class IP65 is achieved only if the connectors and caps are screwed into place!

7.2 Electrical connection of the BCL 548*i*

As a PROFINET-IO participant, the BCL 548*i* is equipped with four M12 plugs / sockets which are A- and D-coded.

The voltage supply (**PWR**) as well as the four freely configurable switching inputs/outputs (**SW IN/OUT** and **PWR**) are connected there.

"**HOST / BUS IN**" is available as a PROFINET-IO interface for connecting to the host system.

By means of the implemented switch function in the BCL 548*i*, an additional second "**BUS OUT**" PROFINET-IO interface is available for creating a scanner network (linear topology).

A USB connection serves as a "SERVICE" interface.

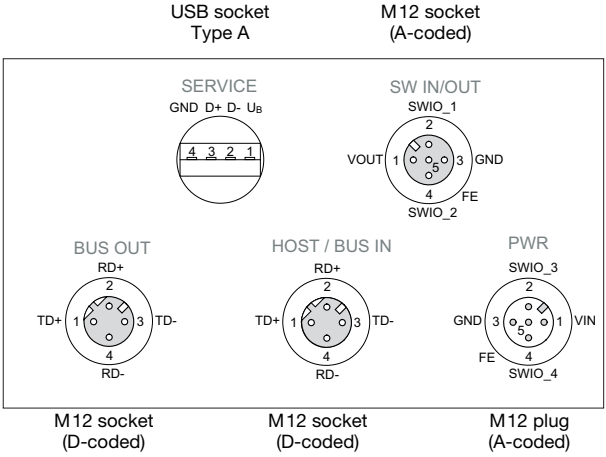

Figure 7.2: Connections of the BCL 548*i*

Described in detail in the following are the individual connections and pin assignments.

7.2.1 PWR – Voltage supply and switching input/outputs 3 and 4

PWR (5-pin plug, A-coded)			
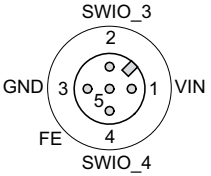 **M12 plug (A-coded)**	**Pin**	**Name**	**Remark**
	1	VIN	Positive supply voltage +10 … +30VDC
	2	SWIO_3	Configurable switching input / output 3
	3	GND	Negative supply voltage 0VDC
	4	SWIO_4	Configurable switching input / output 4
	5	FE	Functional earth
	Thread	FE	Functional earth (housing)

Table 7.1: Pin assignment PWR

Supply voltage

Attention!

For UL applications, use is permitted exclusively in Class 2 circuits according to NEC (National Electric Code).

The BCL 548*i* bar code readers are designed in accordance with safety class III for supply by PELV (protective extra-low voltage with reliable disconnection).

Connecting functional earth FE

↳ *Ensure that the functional earth (FE) is connected correctly. Unimpaired operation is only guaranteed when the functional earth is connected properly. All electrical disturbances (EMC couplings) are discharged via the functional earth connection.*

Switching input / output

The BCL 548*i* is equipped with four freely programmable, opto-decoupled switching inputs and outputs **SWIO_1 … SWIO_4**.

The switching inputs can be used to activate various internal functions of the BCL 548*i* (decoding, autoConfig, …). The switching outputs can be used to signal the state of the BCL 548*i* and to implement external functions independent of the superior control.

The two switching inputs/outputs **SWIO_1** and **SWIO_2** are located on the **SW IN/OUT** M12 socket and are described in chapter 7.2.3. The other two (**SWIO_3** and **SWIO_4**) of the four freely configurable switching inputs/outputs are located on the **PWR** M12 connector.

Notice!

*In general, configuration of the bar code reader takes place on the PROFINET-IO via the corresponding GSD file. Alternatively, you can temporarily set the respective function as input or output via the display or with the aid of the **webConfig** configuration tool for the purpose of testing the respective functionality. After reconnecting to the PROFINET-IO or after deactivating parameter enabling, the parameter settings set by the PROFINET-IO are again active!*

Described in the following is the external wiring for use as a switching input or output; the respective function assignments to the switching inputs/outputs can be found in chapter 10.

Function as switching input

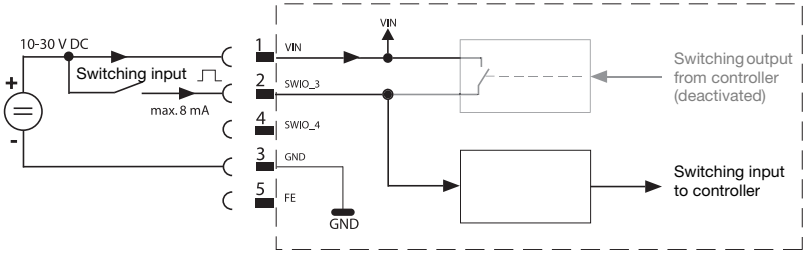

Figure 7.3: Switching input connection diagram SWIO_3 and SWIO_4

↳ *If you use a sensor with a standard M12 connector, please note the following:*

- Pins 2 and 4 must not be operated as switching outputs if sensors which function as inputs are also connected to these pins.

If, for example, the inverted sensor output is connected to pin 2, and pin 2 of the bar code reader is, at the same time, configured as an output (and not as an input), the switching output malfunctions.

Attention!

The maximum input current must not exceed 8 mA!

Function as switching output

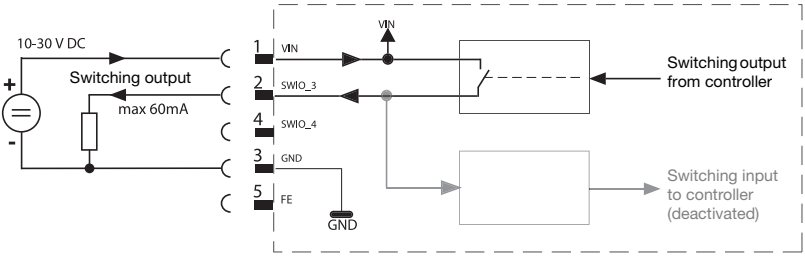

Figure 7.4: Switching output connection diagram SWIO_3 / SWIO_4

Attention!

Each configured switching output is short-circuit proof! Do not load the respective switching output of the BCL 548i with more than 60 mA at +10 … +30 VDC in normal operation!

Notice!

Both switching inputs/outputs SWIO_3 and SWIO_4 are configured by default in such a way that:

- Switching input SWIO_3 activates the reading gate
- Switching output SWIO_4 switches on "No Read"

7.2.2 SERVICE – USB interface (type A)

SERVICE – USB interface (type A)			
SERVICE GND D+ D- U_B 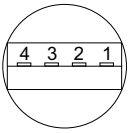 	**Pin**	**Name**	**Remark**
	1	VB	Positive supply voltage +5VDC
	2	D-	Data -
	3	D+	Data +
	4	GND	Ground

Figure 7.5: Pin assignments of SERVICE – USB interface

Attention!

Maximum load of the +5VDC supply voltage of the USB interface is 200mA!

↳ *Ensure adequate shielding.*

The entire connection cable must absolutely be shielded acc. to the USB specifications. Cable length must not exceed 3m.

↳ *Use the Leuze-specific **USB service cable** (see chapter 13 "Type overview and accessories") for the connection and use a service PC to configure.*

Notice!

IP 65 is achieved only if the connectors and caps are screwed into place. Alternatively, a parameter memory in the form of a USB memory stick certified by Leuze electronic GmbH + Co. can be connected to the provided USB service interface. With this Leuze memory stick, protection class IP 65 is also ensured.

7.2.3 SW IN/OUT – Switching input/switching output

SW IN/OUT (5-pin socket, A-coded)			
SW IN/OUT SWIO_1 2 VOUT 1 5 3 GND 4 FE SWIO_2 **M12 socket (A-coded)**	**Pin**	**Name**	**Remark**
	1	**VOUT**	Voltage supply for sensors (VOUT identical to VIN at PWR IN)
	2	**SWIO_1**	Configurable switching input / output 1
	3	**GND**	GND for the sensors
	4	**SWIO_2**	Configurable switching input / output 2
	5	**FE**	Functional earth
	Thread	**FE**	Functional earth (housing)

Figure 7.6: Pin assignment SW IN/OUT

The BCL 548*i* is equipped with four freely programmable, opto-decoupled switching inputs and outputs **SWIO_1 … SWIO_4**.

The two switching inputs/outputs **SWIO_1** and **SWIO_2** are located on the **SW IN/OUT** M12 socket. The other two (**SWIO_3** and **SWIO_4**) of the four freely configurable switching inputs/outputs are located on the **PWR** M12 connector and are described in chapter 7.2.1.

Described in the following is the external wiring for use as a switching input or output; the respective function assignments to the switching inputs/outputs can be found in chapter 10.

Function as switching input

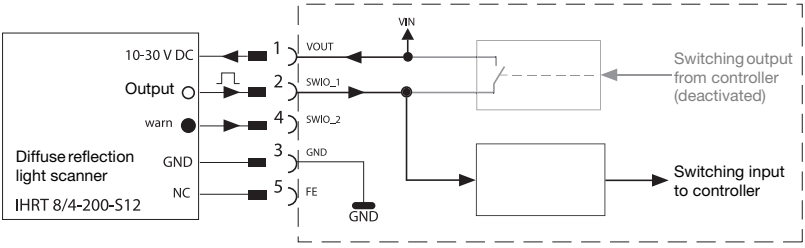

Figure 7.7: Switching input connection diagram SWIO_1 and SWIO_2

↳ *If you use a sensor with a standard M12 connector, please note the following:*

- Pins 2 and 4 must not be operated as switching outputs if sensors which function as inputs are also connected to these pins.

If, for example, the inverted sensor output is connected to pin 2, and pin 2 of the bar code reader is, at the same time, configured as an output (and not as an input), the switching output malfunctions.

Attention!

The maximum input current must not exceed 8 mA!

Function as switching output

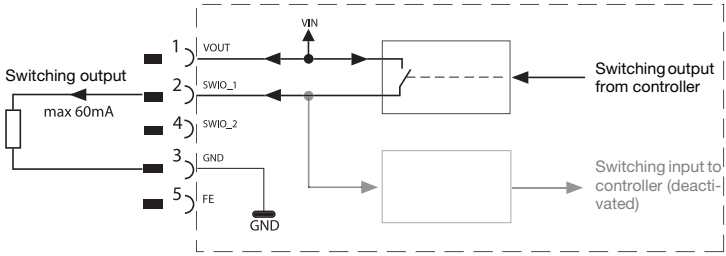

Figure 7.8: Switching output connection diagram SWIO_1 / SWIO_2

Attention!

Each configured switching output is short-circuit proof! Do not load the respective switching output of the BCL 548i with more than 60mA at +10 … +30VDC in normal operation!

Notice!

*Both switching inputs/outputs SWIO_1 and SWIO_2 are configured by default in such a way that they function as **switching inputs**:*

- Switching input **SWIO_1** activates the **start reading gate** function
- Switching input **SWIO_2** activates the **reference code teach-in** function

The functions of the individual switching inputs/outputs are programmed via the display or via configuration in the **webConfig** tool under the Switching input or Switching output heading.

For further information, see also "Commissioning and configuration" on page 116.

7.2.4 HOST / BUS IN for BCL 548*i*

The BCL 548*i* makes either the PROFINET-IO interface available as host interface.

HOST / BUS IN (4-pin socket, D-coded)			
HOST / BUS IN RD+ 2 TD+ 1 3 TD- 4 RD- **M12 socket (D-coded)**	**Pin**	**Name**	**Remark**
	1	**TD+**	Transmit Data +
	2	**RD+**	Receive Data +
	3	**TD-**	Transmit Data -
	4	**RD-**	Receive Data -
	Thread	**FE**	Functional earth (housing)

Table 7.2: Pin assignment HOST / BUS IN BCL 548*i*

↳ *For the host connection of the BCL 548i, the "KB ET - … - SA-RJ45" ready-made cables are preferred, see table 13.8 "Bus connection cable for the BCL 548i" on page 232.*

PROFINET-IO cable assignments

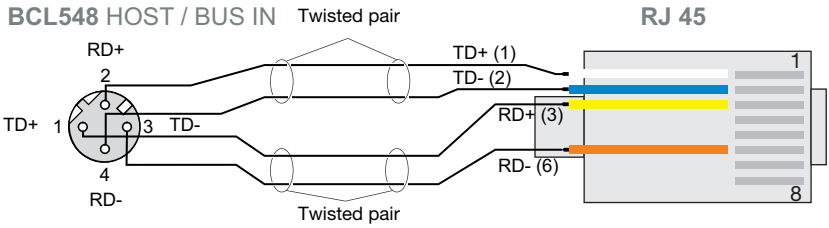

Figure 7.9: HOST / BUS IN cable assignments on RJ-45

Notice for connecting the PROFINET-IO interface!

Ensure adequate shielding. The entire connection cable must be shielded and earthed. The RD+/RD- and TD+/TD- wires must be stranded in pairs.
Use CAT 5 cable for the connection.

7.2.5 BUS OUT for the BCL 548*i*

To set up a PROFINET-IO network with other participants with linear topology, the BCL 548*i* makes available another PROFINET-IO RT interface. The use of this interface drastically reduces the cabling requirements, as only the first BCL 548*i* requires a direct connection to the switch, via which it can communicate with the host. All other BCL 548*i* are connected in series to the first BCL 548*i*, see figure 7.11.

BUS OUT (4-pin socket, D-coded)			
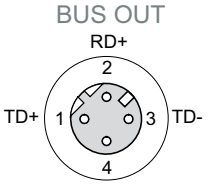 **M12 socket (D-coded)**	**Pin**	**Name**	**Remark**
	1	**TD+**	Transmit Data +
	2	**RD+**	Receive Data +
	3	**TD-**	Transmit Data -
	4	**RD-**	Receive Data -
	Thread	**FE**	Functional earth (housing)

Table 7.3: Pin assignment BUS OUT

For the connection of two BCL 548i, the "KB ET - … - SSA" ready-made cables are preferred, see table 13.8 "Bus connection cable for the BCL 548i" on page 232.

If you use user-configurable cables, note the following:

Notice!

Ensure adequate shielding. The entire connection cable must be shielded and earthed. The signal lines must be stranded in pairs.
Use CAT 5 cable for the connection.

Note!

For the BCL 548i as standalone device or as the last participant in a linear topology, termination on the BUS OUT socket is not mandatory!

7.3 PROFINET-IO topologies

The BCL 548*i* can be operated as a single device (standalone) with individual device name in a PROFINET-IO star topology. The PLC must communicate this device name to the participant during the "device naming" (see section "Step 5 – Configuration of the device name - naming the device" on page 121).

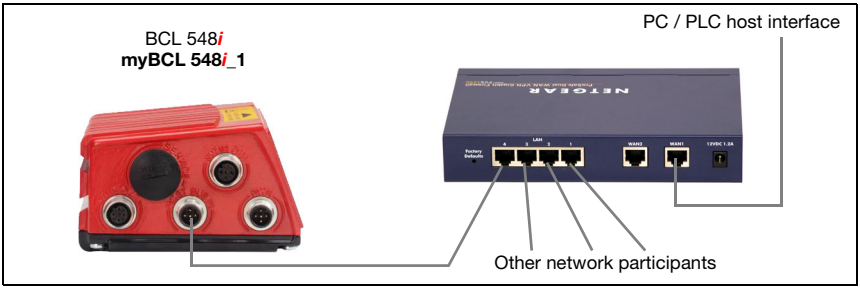

Figure 7.10: PROFINET-IO in a star topology

The innovative further development of the BCL 548*i* with integrated switch functionality offers the option of networking multiple bar code readers of type BCL 548*i* with one another. In addition to the classic "star topology", a "linear topology" is thus also possible.

This makes wiring the network easy and inexpensive as participants are connected to one another in parallel.

The maximum length of a segment (connection from one participant to the next) is limited to 100m.

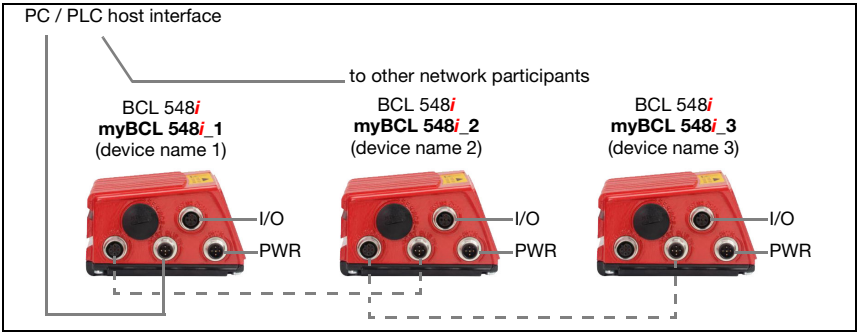

Figure 7.11: PROFINET-IO in a line topology

Up to 254 bar code readers can be networked. They must all be located in the same subnet.

To do this, the individual "device name" is assigned to each participating BCL 548*i* through "device naming", using the control's configuration tool. Detailed information can be found in section "Step 5 – Configuration of the device name - naming the device" on page 121.

Information on the necessary configuration steps can be found in chapter 10.

7.3.1 PROFINET-IO wiring

A Cat. 5 Ethernet cable should be used for wiring.

For the connection technology transition from M12 to RJ45, a "KDS ET M12 / RJ 45 W - 4P" adapter is available that lets you connect standard network cables.

If no standard network cables are to be used (e.g. due to lacking IP… protection class), you can use the "KB ET - … - SA" user-configurable cable on the BCL 548*i*, see table 13.8 "Bus connection cable for the BCL 548i" on page 232.

The individual BCL 548*i* devices in a linear topology are connected with the "KB ET - … - SSA" cable, see table 13.8 "Bus connection cable for the BCL 548i" on page 232.

For unavailable cable lengths, you can configure your cables yourself. When doing so, make certain that you connect **TD+** on the M12 connector with **RD+** on the RJ-45 connector and **TD-** on the M12 connector with **RD-** on the RJ-45 connector, respectively, etc.

Notice!

Use the recommended connectors / sockets or the ready-made cables (see chapter 13 "Type overview and accessories").

7.4 Cable lengths and shielding

Observe the following maximum cable lengths and shielding types:

Connection	Interface	Max. cable length	Shielding
BCL – service	USB	3 m	shielding absolutely necessary acc. to USB specifications
BCL – host	PROFINET-IO RT	100 m	absolutely required, shielded
Network from the first BCL to the last BCL	PROFINET-IO RT	the maximum segment length must not exceed 100 m for 100Base-TX Twisted Pair (min. Cat. 5)	absolutely required, shielded
BCL – power supply unit		30 m	not necessary
Switching input		10 m	not necessary
Switching output		10 m	not necessary

Table 7.4: Cable lengths and shielding

8 Display and control panel

8.1 Structure of the control panel

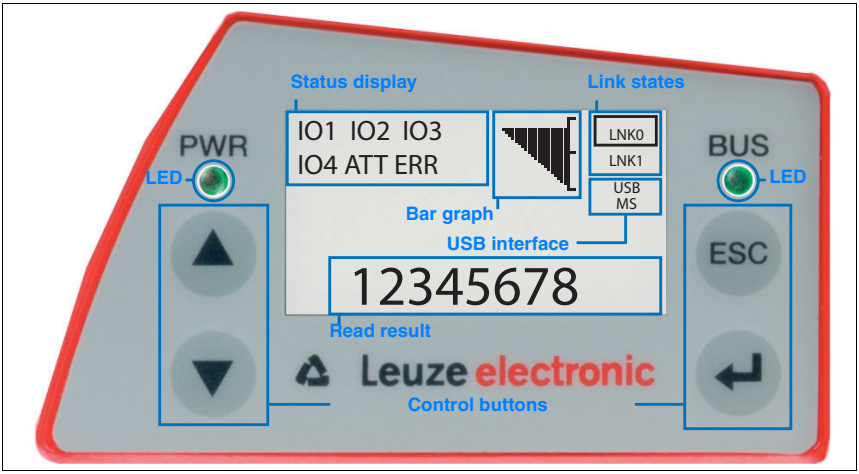

Figure 8.1: Structure of the control panel

8.2 Status display and operation

8.2.1 Indicators in the display

Status displays of the switching inputs/outputs

IO1 Switching input or switching output 1 active (function dependent on set configuration).
Default: Switching input with the "Reading gate activation" function

IO2 Switching input or switching output 2 active (function dependent on set configuration).
Default: Input with the "Teach-in" function

IO3 Switching input or switching output 3 active (function dependent on set configuration).
Default: Switching input with the "Reading gate activation" function

IO4 Switching input or switching output 4 active (function dependent on set configuration).
Default: Switching output with the "No read" function

ATT Warning (Attention)

ERR Internal device error (Error) -> The device must be sent in for inspection

Bar graph

The read quality is described on a scale of 0 - 100 %. The quality is evaluated based on the "Equal Scans" of the read result configured in the bar code reader.

Status display of the USB interface

USB The BCL 548*i* is connected to a PC via the USB interface.

MS An external parameter memory is properly connected to the USB interface of the BCL 548*i*.

Read result

The read bar code information is displayed.

Link states

Displays the link states (LNK0 and LNK1) of the PROFINET-IO interface.

- LNK0: physical connection to the HOST / BUS IN port
- LNK1: physical connection to the BUS OUT port

8.2.2 LED status indicators

PWR LED

PWR	**off**	**Device OFF** - no supply voltage
PWR	**flashes green**	**Device ok, initialization phase** - no bar code reading possible - voltage connected - self test running - initialization running
PWR	**green continuous light**	**Device ok** - bar code reading possible - self test successfully finished - device monitoring active
PWR	**orange continuous light**	**Service mode** - bar code reading possible - configuration via the USB service interface - configuration via the display - no data on the host interface
PWR	**flashes red**	**Device ok, warning set** - bar code reading possible - temporary operating fault
PWR	**red continuous light**	**Device error / parameter enable** - no bar code reading possible

BUS LED

BUS	**off**	**No supply voltage** - no communication possible - PROFINET-IO communication not initialized or inactive
BUS	**flashes green**	**Initialization** - of the BCL 548*i*, establishing communication
BUS	**green continuous light**	**Operation ok** - Network operation ok - Connection and communication to IO Controller (PLC) established ("data exchange")
BUS	**flashes red**	**Communication error** bus error - Parameterization or configuration failed ("parameter failure") - IO error - no data exchange
BUS	**red continuous light**	**Network error** bus error - No communication (protocol) to IO Controller established ("no data exchange")

8.2.3 Control buttons

▲	**Up**	**Navigate upward/laterally.**
▼	**Down**	**Navigate downward/laterally.**
ESC	**ESC**	**Exit menu item.**
↵	**ENTER**	**Confirm/enter value, change menu levels.**

Navigating within the menus

The menus within a level are selected with the up/down buttons ▲ ▼.

The selected menu item is activated with the enter button ↵.

Press the ESC button ESC to move up one menu level.

When one of the buttons is actuated, the display illumination is activated for 10 min.

Setting values

If input of a value is possible, the display looks like this:

```
0000|
   <-|0123456789  save
Standard ----- Unit
  0000  |    |
```

Use the ▲▼ and ↵ buttons to set the desired value. An accidental, incorrect entry can be corrected by selecting <-| and then pressing ↵.

Then use the ▲▼ buttons to select save and save the set value by pressing ↵.

Selecting options

If options can be selected, the display looks like this:

```
o OFF
  ON
Standard ----- Unit
   OFF  |    |
```

Select the desired option with the ▲▼ buttons. Activate the option by pressing ↵.

8.3 Menu description

After voltage is applied to the bar code reader, a startup screen is displayed for several seconds. The display then shows the bar code reading window with all status information.

8.3.1 The main menus

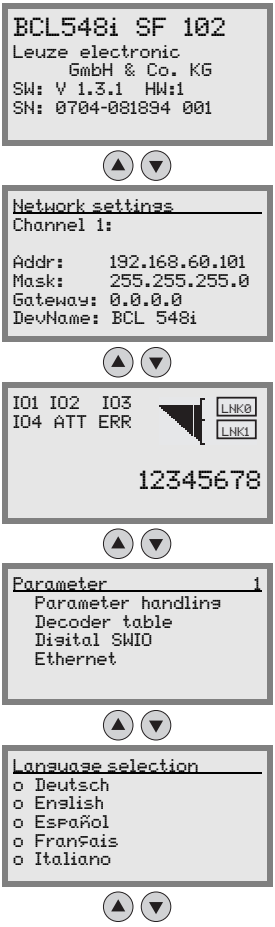

Device information - main menu

This menu item contains detailed information on

- Device type
- Software version
- Hardware version
- Serial number

Network settings - main menu

- Display of the network settings

see "Ethernet" on page 102.

Bar code reading window - main menu

- Visualization of the read bar code information
- Status overview of the switching inputs/outputs
- Bar graphs for read quality of the current bar code

see "Indicators in the display" on page 89.

Parameter - main menu

- Configuration of the bar code reader.

see "Parameter menu" on page 95.

Language selection - main menu

- Selection of the display language.

see "Language selection menu" on page 104.

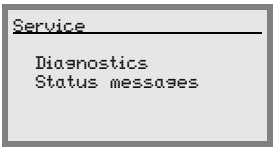

Service - main menu

- Scanner diagnosis and status messages

see "Service menu" on page 105.

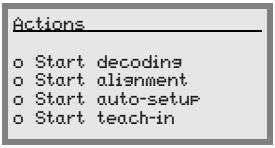

Actions main menu

- Various functions for scanner configuration and manual operation

see "Actions menu" on page 105.

Notice!

The rear cover *of this manual includes a* ***fold-out page*** *with the complete* ***menu structure****. It describes the menu items in brief.*

*A detailed description of the individual parameters can be found in the description of the PROFINET-IO GSD modules (*see chapter 10.6 "Overview of the project modules"*).*

Attention!

*If parameters are changed via the display during bus operation, the BCL 548**i** is separated from the PROFINET-IO at the moment parameter enabling is activated via the display. Parameters set by the PROFINET-IO are moved to the background, and changes to parameters can be made via the display. When parameter enabling is exited, the BCL 548**i** is automatically reconnected to the PROFINET-IO. Upon connection to the PROFINET-IO, the BCL 548**i** receives all parameters from the PROFINET-IO Controller (PLC).*

Changes made via the display are overwritten!
Device settings for operating the BCL 548i on the PROFINET-IO are managed and configured exclusively by the PROFINET-IO Controller (PLC).

8.3.2 Parameter menu

Parameter handling

The Parameter handling submenu is used to lock and release the parameter input via the display and for resetting to default values.

Table 8.1: Parameter handling submenu

Level 3	Level 4	Level 5	Selection/configuration option *Description*	Standard
Parameter enabling			OFF/ON *The standard setting (OFF) prevents unintended parameter changes.* *If parameter enabling is activated (ON), parameters can be changed manually.* *As long as parameter enabling is activated, the BCL 548i is disconnected from the PROFINET-IO.*	OFF
Parameters to default			*By pressing the enter button ↵ after selecting Parameters to default, all parameters are reset to their standard settings without any further security prompts.* *In this case, English is selected as the display language.*	

Decoder table

In the `Decoder table` submenu, 4 different code type definitions can be stored. Bar codes that have been read can only be decoded if they correspond to one of the definitions stored here.

Table 8.2: Decoder table submenu

Level 3	Level 4	Level 5	Selection/configuration option *Description*	Standard
Max. no. of labels			Value between 0 and 64 *The value set here specifies the maximum number of labels that should be detected for each reading gate.*	1
Decoder 1	Symbology (Code type)		No code Code 2 of 5 interleaved Code 39 Code 32 Code UPC Code EAN Code 128 EAN Addendum Codabar Code 93 GS1 DataBar Omnidirectional GS1 DataBar Limited GS1 DataBar Expanded *If `No code` is configured, the current and all subsequent decoders are deactivated.*	Code 2/5i
	Number of digits	Interval mode	OFF/ON *With the `ON` setting, the values in digits 1 and 2 define a range of character numbers that are to be read.*	OFF
		Digits 1	0 to 64 characters *First decodable number of characters or lower range limit.*	10
		Digits 2	0 to 64 characters *Second decodable number of characters or upper range limit.*	0
		Digits 3	0 to 64 characters *Third decodable number of characters.*	0
		Digits 4	0 to 64 characters *Fourth decodable number of characters.*	0
		Digits 5	0 to 64 characters *Fifth decodable number of characters.*	0
	Reading reliability		Value from 2 to 100 *Number or scans required to reliably detect a label.*	4

Table 8.2: Decoder table submenu

Level 3	Level 4	Level 5	Selection/configuration option *Description*	Standard
	Check digit method		Standard No check *Depending on the symbology (code type) selected for the decoder, further calculation algorithms can be selected here.* *Check digit method used for the decoding of the bar code that has been read.* *If Standard is set, the check digit method intended for the respective code type is used.*	Standard
	Check digit transm.		Standard Not standard *Specifies whether the check digit is transmitted. Standard means that the transmission matches the standard intended for the respective code type.*	Standard
Decoder 2	Symbology		*as decoder 1*	Code 39
	Number of digits	Interval mode	OFF/ON	ON
		Digits 1	0 to 64 characters	4
		Digits 2	0 to 64 characters	30
		Digits 3	0 to 64 characters	0
		Digits 4	0 to 64 characters	0
		Digits 5	0 to 64 characters	0
	Reading reliability		Value from 2 to 100	4
	Check digit method		*as decoder 1*	Standard
	Check digit transm.		*as decoder 1*	Standard
Decoder 3	Symbology		*as decoder 1*	Code 128
	Number of digits	Interval mode	OFF/ON	ON
		Digits 1	0 to 64 characters	4
		Digits 2	0 to 64 characters	63
		Digits 3	0 to 64 characters	0
		Digits 4	0 to 64 characters	0
		Digits 5	0 to 64 characters	0
	Reading reliability		Value from 2 to 100	4
	Check digit method		*as decoder 1*	Standard
	Check digit transm.		*as decoder 1*	Standard

Table 8.2: Decoder table submenu

Level 3	Level 4	Level 5	Selection/configuration option *Description*	Standard
Decoder 4	Symbology		*as decoder 1*	Code UPC
	Number of digits	Interval mode	OFF/ON	OFF
		Digits 1	0 to 64 characters	8
		Digits 2	0 to 64 characters	0
		Digits 3	0 to 64 characters	0
		Digits 4	0 to 64 characters	0
		Digits 5	0 to 64 characters	0
	Reading reliability		Value from 2 to 100	4
	Check digit method		*as decoder 1*	Standard
	Check digit transm.		*as decoder 1*	Standard

Digital SWIO

The Digital SWIO submenu is used to configure the 4 switching inputs/outputs of the BCL 548*i*.

Table 8.3: Digital SWIO submenu

Level 3	Level 4	Level 5	Selection/configuration option *Description*	Standard
Sw. input/ output 1	I/O mode		Input / Output / Passive *Determines the function of switching input/output 1.* *In the case of passive, the connection is on 0 V if the Inverted parameter is set to OFF, and on +UB if the Inverted parameter is set to ON.*	Input
	Switching input	Inverted	OFF / ON *OFF = activation of the switching input function upon high level at the switching input* *ON = activation of the switching input function upon low level at the switching input*	OFF
		Debounce time	Value from 0 to 1000 *Time in milliseconds for which the input signal must be present and stable.*	5
		Start-up delay	Value from 0 to 65535 *Time in milliseconds between the end of the debounce time and activation of the function configured below.*	0
		Pulse duration	Value from 0 to 65535 *Minimum activation time in milliseconds for the function configured below.*	0
		Switch-off delay	Value from 0 to 65535 *Time in milliseconds for which the function configured below remains activated after the switching input signal is deactivated and the pulse duration has expired.*	0
		Function	No BCL500i function Reading gate start/stop Rd. gate stop Rd. gate start Teach reference code Autoconfig start/stop *The function set here is carried out after the switching input is activated.*	Reading gate start/stop

Table 8.3: Digital SWIO submenu

Level 3	Level 4	Level 5	Selection/configuration option *Description*	Standard
	Switching output	Inverted	OFF / ON *OFF = activated switching output upon high level* *ON = activated switching output upon low level*	OFF
		Signal delay	Value from 0 to 65535 *Time in milliseconds between activation function and switching of the switching output.*	0
		Pulse duration	Value from 0 to 65535 *Switch-on time of the switching output in milliseconds. If the Pulse duration is set to 0, the switching output is switched on via the Activation function and switched off via the Deactivation function.* *If the Pulse duration is greater than 0, the Deactivation function has no effect.*	400
		Activation function 1	No function Reading gate start Reading gate end Positive reference code comparison 1 Negative reference code comparison 1 Valid read result Invalid read result Device ready Device not ready Data transmission active Data transmission not active AutoCont. good quality AutoCont. bad quality Reflector detected Reflector not detected External event, pos. edge External event, neg. edge Device active Device standby No device error Device error Positive reference code comparison 2 Negative reference code comparison 2 *The function set here specifies which event activates the switching output.*	No function
		Deactivation function 1	See Activation function 1 for selection options *The function set here specifies the event that deactivates the switching output.*	No function

Table 8.3: Digital SWIO submenu

Level 3	Level 4	Level 5	Selection/configuration option *Description*	Standard
Sw. input/ output 2	I/O mode		Input / Output / Passive	Output
	Switching input	Inverted	OFF / ON	OFF
		Debounce time	Value from 0 to 1000	5
		Start-up delay	Value from 0 to 65535	0
		Pulse duration	Value from 0 to 65535	0
		Switch-off delay	Value from 0 to 65535	0
		Function	*see switching input/output 1*	No function
	Switching output	Inverted	OFF / ON	OFF
		Signal delay	Value from 0 to 65535	0
		Pulse duration	Value from 0 to 65535	400
		Activation function 2	*see switching input/output 1*	Valid read result
		Deactivation function 2	*see switching input/output 1*	Reading gate start
Sw. input/ output 3	I/O mode		Input / Output / Passive	Input
	Switching input	Inverted	OFF / ON	OFF
		Debounce time	Value from 0 to 1000	5
		Start-up delay	Value from 0 to 65535	0
		Pulse duration	Value from 0 to 65535	0
		Switch-off delay	Value from 0 to 65535	0
		Function	*see switching input/output 1*	Reading gate start/stop
	Switching output	Inverted	OFF / ON	OFF
		Signal delay	Value from 0 to 65535	0
		Pulse duration	Value from 0 to 65535	400
		Activation function 3	*see switching input/output 1*	No function
		Deactivation function 3	*see switching input/output 1*	No function
Sw. input/ output 4	I/O mode		Input / Output / Passive	Output
	Switching input	Inverted	OFF / ON	OFF
		Debounce time	Value from 0 to 1000	5
		Start-up delay	Value from 0 to 65535	0
		Pulse duration	Value from 0 to 65535	0
		Switch-off delay	Value from 0 to 65535	0
		Function	*see switching input/output 1*	No function
	Switching output	Inverted	OFF / ON	OFF
		Signal delay	Value from 0 to 65535	0
		Pulse duration	Value from 0 to 65535	400
		Activation function 4	*see switching input/output 1*	Invalid read result
		Deactivation function 4	*see switching input/output 1*	Reading gate start

Ethernet

The Ethernet submenu is used to configure the TCP/IP and UDP protocols of the BCL 548*i*.

Notice!

Note that the parameters described in the following may be edited but do not become active until the system is restarted and may then be overwritten by the dominant PLC data.

Table 8.4: Ethernet submenu

Level 3	Level 4	Level 5	Level 6	Selection/configuration option *Description*	Standard
Ethernet interface	IP address			The IP address can be set to any value in the xxx.xxx.xxx.xxx format. *Normally, the network administrator specifies the IP address that is to be set here. If DHCP is activated, the setting made here has no effect and the BCL 548i is set to the values that it obtains from the DHCP server.*	192.168.060.101
	Gateway			The gateway address can be set to any value in the xxx.xxx.xxx.xxx format. *The BCL 548i communicates with participants in other subnets via the gateway. Splitting the read application over multiple subnets is rather uncommon; the setting of the gateway address, thus, usually has no meaning.*	000.000.000.000
	Net mask			The net mask can be set to any value in the xxx.xxx.xxx.xxx format. *Usually, the BCL 548i is used in a private Class C network and the default setting can be accepted without change.* *Attention: It is possible to enter any values for xxx.xxx.xxx.xxx. Only the values 255 or 000 are permissible for xxx, however. If other values are set, an error message appears upon restart of the BCL 548i.*	255.255.255.000
	DHCP activated			Off/On *If DHCP is activated, the BCL 548i draws its settings for IP address, gateway and net mask from a DHCP server. The manual settings made above have no effect, but are retained and are again active if DHCP is deactivated.*	Off

Table 8.4: Ethernet submenu

Level 3	Level 4	Level 5	Level 6	Selection/configuration option *Description*	Standard
Host communication	TcpIP	Activated		Off/On *TCP/IP communication with the host is activated. TCP/IP and UDP can be operated in parallel to the PROFINET-IO!*	Off
		Mode		Server/client *`Server` defines the BCL 548i as TCP server: The superior host system (PC / PLC as client) actively establishes the connection and the connected BCL 548i waits for the connection to be setup. Under `TcpIP Server -> Port number`, you must also specify on which local port of the BCL 548i communication requests of a client application are accepted (host system). `Client` defines the BCL 548i as TCP client: The BCL 548i actively establishes the connection to the superior host system (PC / PLC as server). Under `TcpIP Client`, you must also specify the IP address of the server (host system) and the port number on which the server (host system) accepts a connection. In this case, the BCL 548i now determines when and with whom a connection is established!*	Server
		TcpIP client	IP address	The IP address can be set to any value in the xxx.xxx.xxx.xxx format. *IP address of the host system with which the BCL 548i exchanges data as TCP client.*	000.000.000.000
			Port number	The port number can be set to any value between 0 and 65535. *Port number of the host system with which the BCL 548i exchanges data as TCP client.*	10000
			Timeout	The timeout can be set to any value between 100 and 60,000 ms. *Time after which an attempt to establish a connection is automatically interrupted by the BCL 548i if the server (host system) does not respond.*	1000 ms
			Repetition time	The repetition time can be set to any value between 100 and 60,000 ms. *Time after which another attempt is made to establish a connection.*	5000 ms

Table 8.4: Ethernet submenu

Level 3	Level 4	Level 5	Level 6	Selection/configuration option *Description*	Standard
		TcpIP server	Port number	The port number can be set to any value between 0 and 65535. *Local port on which the BCL 548i accepts connection requests from a client application (host system) as TCP server.*	10000
	UDP	Activated		Off/On *Activates the connection-free UDP protocol which is suitable for e.g. transferring process data to the host. UDP and TCP/IP can be used in parallel.* *For network applications with changing partners or for only brief data transmissions, UDP is preferred as connection-free protocol.*	Off
		IP address		IP address of the host to which the data is to be transferred. The IP address can be set to any value in the xxx.xxx.xxx.xxx format. *Correspondingly, the host system (PC / PLC) requires the set IP address of the BCL 548i and the selected port number. By assigning these parameters, a socket is formed via which the data can be sent and received.*	000.000.000.000
		Port number		Port number of the host to which the data is to be transferred. The port number can be set to any value between 0 and 65535.	10001

8.3.3 Language selection menu

Currently, there are 5 display languages available:

- German
- English
- Spanish
- French
- Italian

The display language and the language of the webConfig user interface are synchronized. The setting in the display affects the webConfig tool and vice versa.

Notice!

When operating the BCL 548i on the PROFINET-IO, the language configured in the GSD file is used in the display.

8.3.4 Service menu

Diagnostics

This menu item is used exclusively for service purposes by Leuze electronic.

Status messages

This menu item is used exclusively for service purposes by Leuze electronic.

8.3.5 Actions menu

Start decoding

Here, you can perform a single reading via the display.

↳ *Use the ↵ button to activate the single read operation and place a bar code in the reading field of the BCL 548i.*

The laser beam is switched on and the following display appears:

```
Actions
o Stop decoding
      zzzzzzzzz
```

Once the bar code is detected, the laser beam is switched off again. The read result zzzzzzzzz is shown directly in the display for about 1 s. After that, the Actions menu is displayed again.

Start alignment

The alignment function makes it easy to align the BCL 548*i* by optically displaying the read quality.

↳ *Use the ↵ button to activate the Justage (alignment) function and place a bar code in the reading field of the BCL 548i.*

At first, the laser beam is switched on continuously, enabling you to position the bar code securely in the reading field. Once the bar code is read, the laser beam is switched off briefly and the following display appears:

```
Actions
o Stop alignment
   xx   zzzzzzzzz
```

xx	Read quality in % (scans with info)
zzzzzz:	Contents of the decoded bar code.

Once the bar code has been detected, the laser beam starts to flash.

The flash frequency provides visual information on the read quality. The faster the laser beam flashes, the higher the read quality.

Notice!

In this mode, the bar code reader must reach at least 100 identical readings to obtain the result. The more readings are required, the lower the read quality.
The read quality is displayed via the bar graph.

Start auto-setup

The auto-setup function provides an easy option for configuring the code type and number of digits of `Decoder 1`.

↳ *Use the ↵ button to activate the auto-setup function and place an unknown bar code in the reading beam of the BCL 548i.*

The following display appears:

```
Actions
o Stop auto-setup
xx yy zzzzzz
```

The following information is displayed:

`xx`	Code type of the detected code (sets the code type of Decoder 1)
'01'	2/5 Interleaved
'02'	Code 39
'03'	Code 32
'06'	UPC (A, E)
'07'	EAN
'08'	Code 128, EAN 128
'10'	EAN Addendum
'11'	Codabar
'12'	Code 93
'13'	GS 1 Databar Omnidirectional
'14'	GS 1 Databar Limited
'15'	GS 1 Databar Expanded
`yy`	Number of digits of the detected code (sets the number of digits of Decoder 1)
`zzzzzz`:	Contents of the decoded label. A ↑ appears if the label was not correctly read.

Start teach-in

The teach-in function can be used to conveniently read reference code 1.

↳ *Use the ↵ button to activate the teach-in function and place a bar code which contains the content that you wish to store as the reference code in the reading beam of the BCL 548i.*

The following display appears:

```
Actions
o Stop teach-in
  RC13xxzzzzzz
```

The following information is displayed:

RC13	means that reference code number 1 is stored in RAM. This is always output.
xx	defined code type (see auto-setup)
z	defined code information (1 … 63 characters)

8.4 Operation

Shown here is an example describing important operating procedures in detail.

Parameter enabling

During normal operation parameters can only be viewed. If parameters need to be changed, the **ON** menu item in the **Parameter enabling** menu must be activated. To do this proceed as follows:

```
Parameter                1
  Parameter handling
  Decoder table
  Digital SWIO
  ETHERNET
```

In the parameter menu, use the ▲▼ buttons to select the Parameter handling menu item.

↵

Press the enter button to enter the Parameter handling menu.

```
Parameter handling 1.1

o Parameter enabling
☐ Parameters to default
```

In the Parameter handling menu, use the ▲▼ buttons to select the Parameter enabling menu item.

↵

Press the enter button to enter the Parameter enabling menu.

```
Parameter enabling
  OFF
o ON

Standard ----- Unit
   OFF  |    |
```

In the Parameter enabling menu, use the ▲▼ buttons to select the ON menu item.

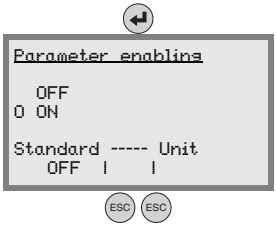

Press the enter button to switch on parameter enabling.

The PWR LED lights up red. You can now set individual parameters via the display.

Press the ESC button twice to return to the main menu.

Notice!

If a password was set, parameter enabling cannot be accessed until this password has been entered, see "Password for parameter enabling" on page 109.

Attention!

The BCL 548i is deactivated on the PROFINET-IO if parameter enabling is activated via the display. The device is reactivated on the PROFINET-IO after parameter enabling is exited.

Notice!

In the PROFINET-IO network, configuration is performed exclusively via the PROFINET-IO Controller.

Parameters set via the display when operating the BCL 548*i* on the PROFINET-IO are overwritten by the parameters set in the GSD modules. For GSD modules which are not actively used on the PROFINET-IO, the default settings of the bar code reader apply, see "Overview of the project modules" on page 134.. Thus, the PROFINET-IO presets values to all parameters.

Attention!

If parameters are changed via the display during bus operation, the BCL 548i is separated from the PROFINET-IO at the moment parameter enabling is activated via the display. Parameters set by the PROFINET-IO are moved to the background, and changes to parameters can be made via the display. When parameter enabling is exited, the BCL 548i is automatically reconnected to the PROFINET-IO. Upon connection to the PROFINET-IO, the BCL 548i receives all parameters from the PROFINET-IO Controller.

Changes made via the display are overwritten!
Device settings for operating the BCL 548i on the PROFINET-IO are managed and configured exclusively by the PROFINET-IO Controller.

Password for parameter enabling

The password query is deactivated by default. To protect against unwanted changes, the password query can be activated. The preset password is **0000** and can be changed as necessary . To switch on password protection, proceed as follows:

Setting the password

Notice!

In order to enter the password, parameter enabling must be activated.

A selected password is saved with save.

If the password is not known, the **master password 2301** can always be used to enable the device.

Attention!

When operating the BCL 548i on the PROFINET, the password entered in the display has no effect. The PROFINET overwrites the password with the default settings.

If a password is desired for PROFINET operation, it must be configured via module 62 (see "Module 62-Display" on page 174).

Network configuration

Information on the configuration of the PROFINET-IO can be found in chapter 10 "Commissioning and configuration" on page 116.

9 Leuze webConfig tool

With the **Leuze webConfig tool**, an operating-system independent, web-technology based, graphical user interface is available for configuring bar code readers of the **BCL 500*i*** series.

Through the use of HTTP as communication protocol and by using only standard technologies on the client side (HTML, JavaScript and AJAX), which are supported by all commonly used, modern browsers (e.g. **Mozilla Firefox** beginning with Version 2 or **Internet Explorer** beginning with Version 7.0), it is possible to operate the **Leuze webConfig tool** on any internet-ready PC.

9.1 Connecting the SERVICE USB interface

The connection to the SERVICE USB interface of the BCL 548*i* is established via the PC-side USB interface using a special USB cable with 2 type A/A connectors.

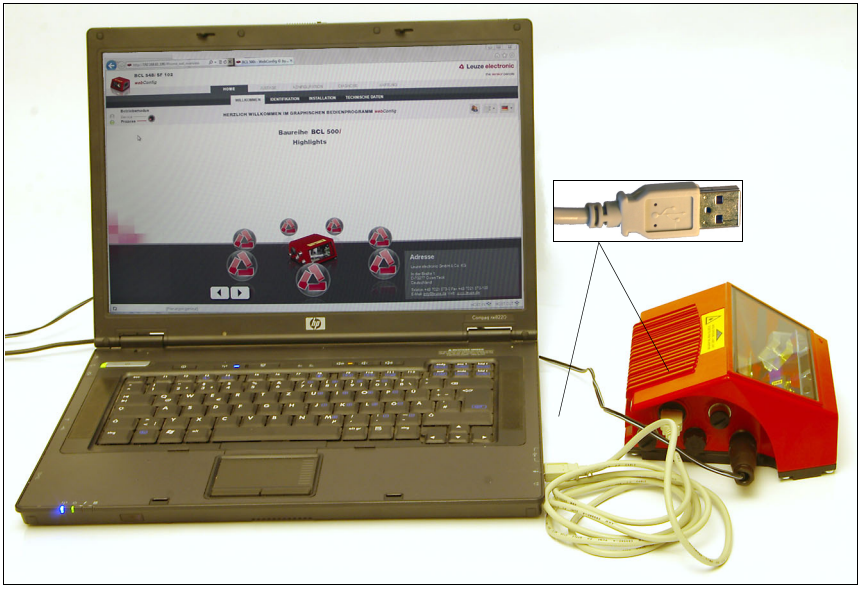

Figure 9.1: Connecting the SERVICE USB interface

9.2 Installing the required software

9.2.1 System requirements

Operating system:	Windows 2000 Windows XP (Home Edition, Professional) Windows Vista Windows 7
Computer:	PC with USB interface version 1.1 or higher
Graphics card:	min. 1024 x 768 pixels or higher resolution
Required hard-disk capacity:	approx. 10MB

Notice!

It is recommended to update the operating system regularly and to install the current Windows service packs.

9.2.2 Installing the USB driver

In order for the BCL 548*i* to be automatically detected by the connected PC, the **USB driver** must be installed **once** on your PC. To do this, you must have **administrator privileges**.

Please proceed according to the following steps:

- *Start your PC with administrator privileges and log on.*
- *Load the CD included in the delivery contents of your BCL 548i in the CD drive and start the "setup.exe" program.*
- *Alternatively, you can also download the setup program from the internet at www.leuze.com.*
- *Follow the instructions provided by the setup program.*

Upon successful installation of the USB driver, a BCL 50xi icon automatically appears on the desktop.

To check: In the Windows Device Manager, a device called "Leuze electronic, USB Remote NDIS Network Device" appears under the "Network adapter" device class following successful USB registration.

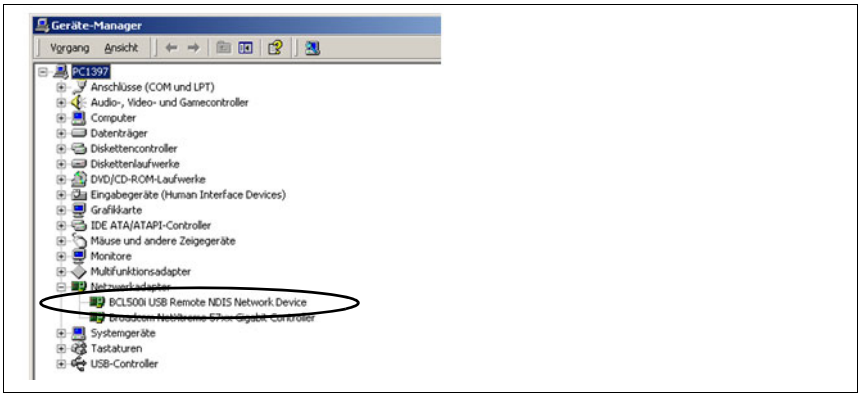

Figure 9.2: Device Manager with connected BCL 500*i*

Notice!

If the installation failed, contact your network administrator: The settings of the firewall used may need to be adjusted.

9.3 Starting the webConfig tool

To start the **webConfig tool**, click the BCL 50xi icon located on the desktop. Make certain that the BCL 548*i* is connected to the PC via the USB interface and that voltage is connected.

Or alternatively: Open a browser on your PC and enter the following address: **192.168.61.100**

This is the default Leuze maintenance address for communication with bar code readers of the BCL 500*i* series.

In both cases, the following start page appears on your PC.

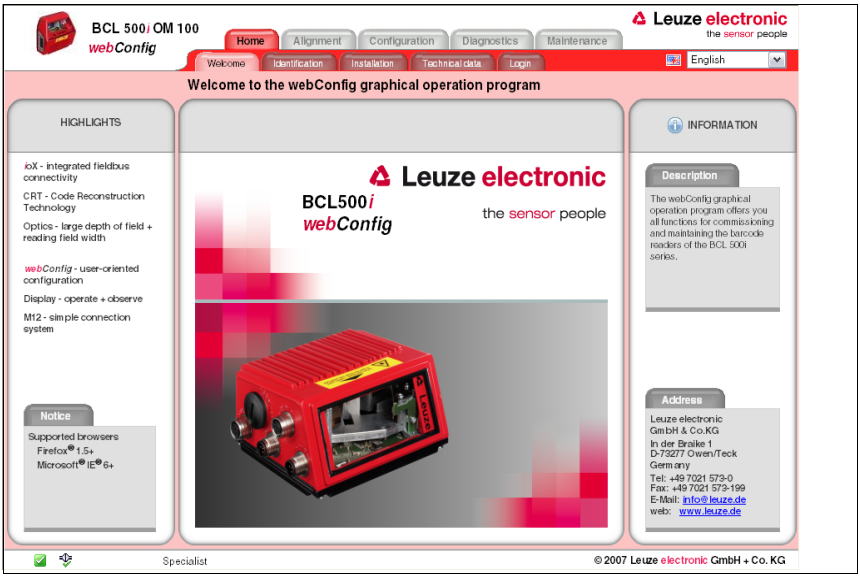

Figure 9.3: The start page of the webConfig tool

Notice!

The webConfig tool is completely contained in the firmware of the BCL 548i. Depending on firmware version, the start page may vary from that shown above.

The individual parameters are – where useful – graphically displayed in order to better illustrate the meaning of the what are often perceived as abstract parameters.

The result is an easy-to-use and practically-oriented user interface!

9.4 Short description of the webConfig tool

The webConfig tool has 5 main menus:

- Home
  with information on the connected BCL 548*i* as well as on installation. This information corresponds to the information in this handbook.
- Alignment
  for manually starting read processes and for aligning the bar code reader. The results of the read processes are displayed immediately. As a result, this menu item can be used to determine the optimum installation location.
- Configuration
  for adjusting decoding, for data formatting and output, switching inputs/outputs, communication parameters and interfaces, etc. …
- Diagnostics
  for event logging of warnings and errors.
- Maintenance
  for updating the firmware

The user interface of the webConfig tool is largely self-explanatory.

9.4.1 Module overview in the Configuration menu

The adjustable parameters of the BCL 548*i* are clustered in modules in the Configuration menu.

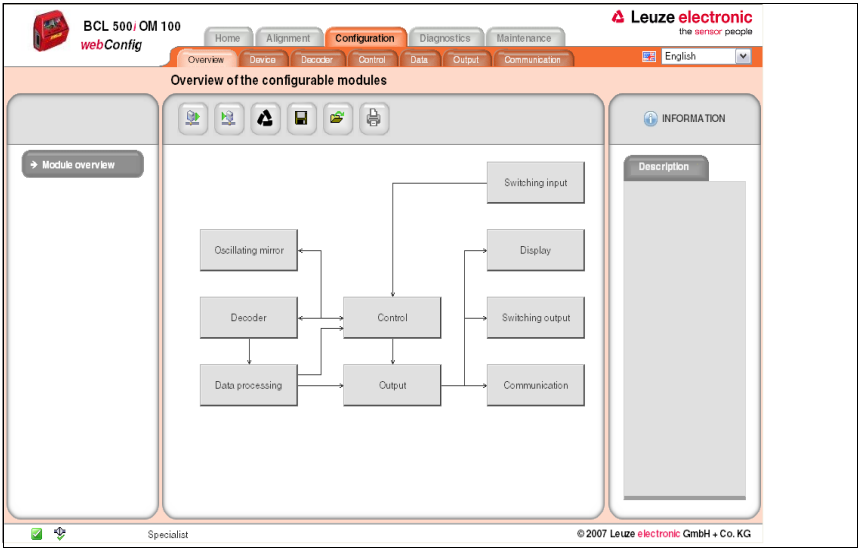

Figure 9.4: Module overview in the webConfig tool

Notice!

The webConfig tool is completely contained in the firmware of the BCL 548i. Depending on firmware version, the module overview may vary from that shown above.

The individual modules and their relationships to one another are graphically displayed in the module overview. The display is context sensitive, i.e. click a module to directly access the corresponding submenu.

An overview of the modules:

- `Decoder`
  Definition of code types, code-type features and number of digits of the labels that are to be decoded.
- `Data processing`
  Filtering and processing of the decoded data.
- `Output`
  Sorting of the processed data and comparison with reference codes.
- `Communication`
  Formatting of the data for output via the communication interfaces.
- `Control`
  Activation/deactivation of decoding.
- `Switching input`
  Activation/deactivation of read processes.
- `Switching output`
  Definition of events which activate/deactivate the switching output.
- `Display`
  Formatting of the data for output on the display.
- `Oscillating mirror` (optional)
  Adjustment of oscillating mirror parameters.

The webConfig tool is available for all bar code readers of the BCL 500*i* series. Because configuration of the BCL 548*i* PROFINET-IO device is performed via the PROFINET-IO Controller, the module overview shown in the webConfig tool is, in this case, used only for displaying and checking the configured parameters.

The current configuration of your BCL 548*i* is loaded upon startup of the webConfig tool. If you change the configuration via the control while the webConfig tool is running, you can use the "Load parameter from device" button after making the changes to update the display in the webConfig tool. This button appears in the upper left in the center window area in all submenus of the Configuration main menu.

10 Commissioning and configuration

Attention Laser!

Observe the safety notices in chapter 2!

10.1 General information on the PROFINET-IO implementation of the BCL 548*i*

10.1.1 PROFINET-IO communication profile

The **communication profile** defines how participants serially transmit their data via the transmission medium.

The **PROFINET-IO** communication profile is designed for efficient data exchange on the field level. The data exchange with the devices is mainly **cyclical**. For the configuration, operation, monitoring and alarm handling, however, **acyclic** communication services are also used.

Depending on the communication requirements, PROFINET-IO offers suitable protocols and transfer methods:

- **R**eal **T**ime communication (RT) via prioritized Ethernet frames for
  - Cyclical process data (I/O data stored in the I/O area of the control)
  - Alarms
  - Clock synchronization
  - Neighborhood information
  - Address assignment/address resolution via DCP
- TCP/UDP/IP communication via standard Ethernet TCP/UDP/IP frames for
  - establishing communication and
  - acyclic data exchange, and also for the transfer of various information types such as:
    - Parameters for the configuration of the modules during the establishment of the communication
    - I&M 0-4 data (Identification & Maintenance functions)
    - Reading diagnostic information
    - Reading I/O data
    - Writing device data

10.1.2 Conformance Classes

PROFINET-IO devices are categorized into conformance classes to simplify the evaluation and selection of the devices for the users. The BCL 548*i* can use an existing Ethernet network infrastructure and corresponds to Conformance Class B (CC-B). Thus, it supports the following features:

- Cyclical RT communication
- Acyclic TCP/IP communication
- Alarms/diagnostics
- Automatic address assignment
- I&M 0-4 functionality
- Neighborhood detection basic functionality
- FAST Ethernet 100 Base-TX/FX
- Convenient device exchange without engineering tools
- SNMP support

10.2 Measures to be performed prior to the initial commissioning

↳ *Before commissioning, familiarize yourself with the operation and configuration of the BCL 548i.*

↳ *Before connecting the supply voltage, recheck all connections and ensure that they have been properly made.*

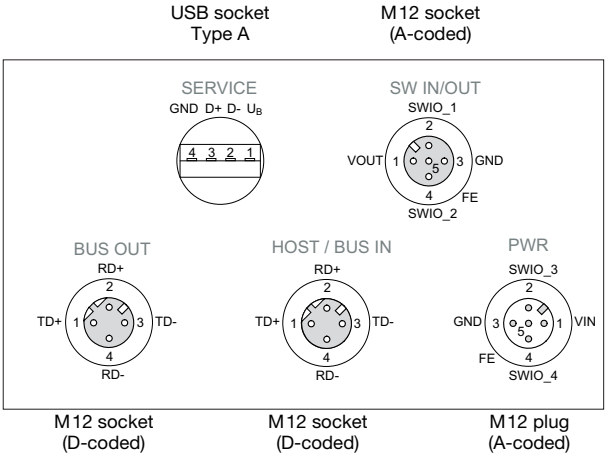

Figure 10.1: Connections of the BCL 548*i*

↳ *Check the applied voltage. It must be in the range between +10V … 30VDC.*

Connecting functional earth FE

↳ *Ensure that the functional earth (FE) is connected correctly.*

Unimpaired operation is only guaranteed when the functional earth is connected properly. All electrical disturbances (EMC couplings) are discharged via the functional earth connection.

10.3 Starting the device

↳ *Connect the supply voltage +10 … 30VDC (typ. +24VDC); the BCL 548i starts up and the bar code reading window appears on the display:*

By default, parameter enabling is deactivated and you cannot change any settings. If you wish to carry out the configuration via the display, you must activate parameter enabling. Further information can be found in chapter "Parameter enabling" on page 107.

First, you need to assign its individual device name to the BCL 548*i*.

10.4 Configuration steps for a Siemens Simatic S7 control

The following steps are necessary for commissioning with a Siemens S7 control:

1. Preparing the control system (S7 PLC)
2. Installing the GSD file
3. Hardware configuration of the S7 PLC
4. Transfer of the PROFINET-IO configuration to the IO Controller (S7 PLC)
5. Device naming
   - Configuration of the device name
   - Device naming
   - Assignment of the device names to the configured IO devices (Figure 10.3...)
   - Assignment of MAC address - IP address -individual device name (Figure 10.4)
6. Check device name

10.4.1 Step 1 – Preparing the control system (S7 PLC)

The first step involves the assignment of an IP address to the IO Controller (PLC - S7) and the preparation of the control for consistent data transmission.

Notice!

If an S7 control is used, you need to ensure that Simatic-Manager Version 5.4 + service pack 5 (V5.4+SP5) or higher is used.

10.4.2 Step 2 – Installation of the GSD file

For the subsequent configuration of the IO devices, e.g., BCL 548*i*, the corresponding GSD file must be loaded first.

General information on the GSD file

The term GSD stands for the textual description of a PROFINET-IO device model.

For the description of the more complex PROFINET-IO device model, the XML-based GSDML (Generic Station Description Markup Language) was introduced.

In the following, the terms "GSD" or "GSD file" always refer to the GSDML-based format.

The GSDML file can support an arbitrary number of languages in one file. Every GSDML file contains a version of the BCL 548*i* device model. This is also reflected in the file name.

File name structure

The file name of the GSD file is constructed according to the following rule:

GSDML-[GSDML schema version]-Leuze-BCL548i-[date].xml

Explanation:

- GSDML schema version:
  version identifier of the GSDML schema version used, e.g., V2.2
- Date:
  Release date of the GSD file in the format yyyymmdd.
  This date doubles as the version identifier of the file.

Example:

GSDML-V2.2-Leuze-BCL548i-20090503.xml

You can find the GSD file for the respective device model at **www.leuze.com**.

All data in modules required for operating the **BCL 548*i*** is described in this file. These are input and output data and device parameters for the functioning of the **BCL 548*i*** and the definition of the control and status bits.

If parameters are changed, e.g., in the project tool, these changes are stored on the PLC side in the project, not in the GSD file. The GSD file is a certified and integral part of the device and must not be changed manually. The file is not changed by the system either.

The functionality of the **BCL 548*i*** is defined via GSD parameter sets. The parameters and their functions are structured in the GSD file using module. A user-specific configuration tool is used during PLC program creation to integrate the required modules and configure them appropriately for their respective use. During operation of the **BCL 548*i*** on the PROFINET-IO, all parameters are set to default values. If these parameters are not changed by the user, the device functions with the default settings delivered by Leuze electronic.

For the default settings of the **BCL 548*i***, please refer to the following module descriptions.

10.4.3 Step 3 – Hardware configuration of the S7 PLC: Configuration

For the configuration of the PROFINET-IO system using the HW Config of the SIMATIC Manager, insert the BCL 548*i* into your project. An IP address is now assigned to a unique "device name".

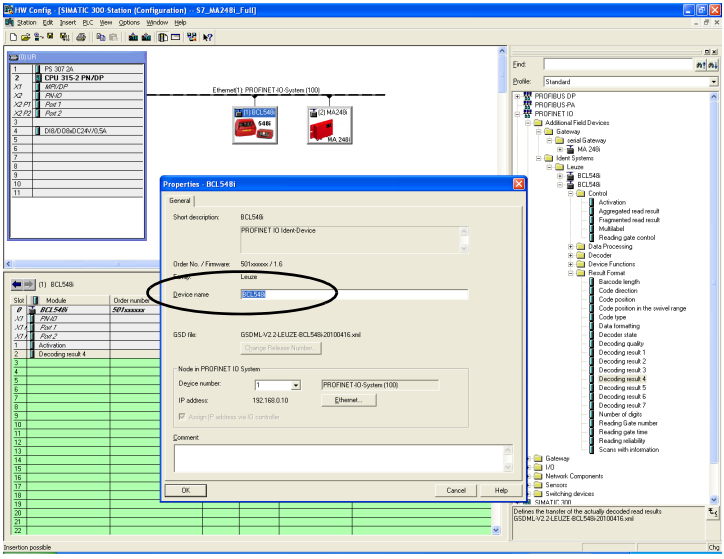

Table 10.1: Assignment of the device names to IP addresses

10.4.4 Step 4 – Transfer of the configuration to the IO Controller (S7 PLC)

After the correct transfer to the IO Controller (S7 PLC), the PLC automatically carries out the following activities:

- Check device names
- Assignment of the IP addresses that were configured in the HW Config to the IO devices
- Establishment of a connection between the IO Controller and configured IO devices
- Cyclical data exchange

Notice!

Participants that have not been "named" cannot be contacted yet at this point in time!

10.4.5 Step 5 – Configuration of the device name - naming the device

The PROFINET-IO device has a unique MAC address that is part of the factory settings. You can find this address on the name plate of the bar code reader.

This information is used to assign a unique, plant-specific device name ("NameOfStation") to the device via the "Discovery and Configuration Protocol (DCP)".

The PROFINET-IO also uses the "Discovery and Configuration Protocol" (DCP) for the IP address assignment during each system boot-up if the IO device is located in the same subnet.

Notice!

All BCL 548i participants in a PROFINET-IO network must be located in the same subnet!

Device naming

PROFINET-IO defines the "naming of the device" as the creation of a name-based relationship for a PROFINET-IO device.

Assigning the device names to the configured IO devices

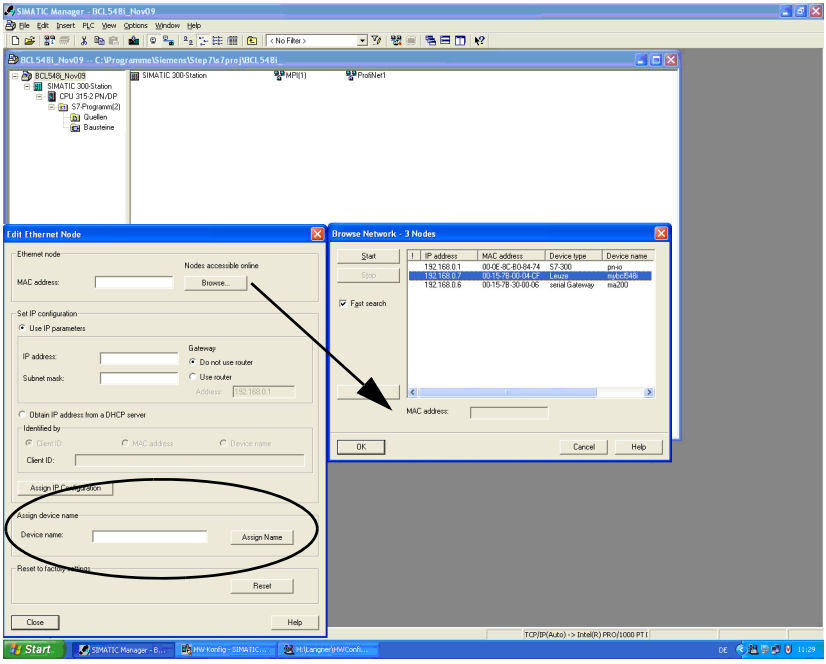

Figure 10.2: Assigning the device names to the configured IO devices

At this point, you can select the respective bar code scanner BCL 548*i* for the "device naming" based on its MAC address. The unique "device name" (which must match the participant in the HW Config) is then assigned to this participant.

Notice!

Multiple BCL 548i can be distinguished by the MAC addresses displayed. The MAC address may be found on the name plate of the respective bar code scanner.

MAC address - IP address -individual device name

At this point, please assign an IP address (suggested by the PLC), a subnet mask and, if required, a router address, and assign this data to the named participant ("device name").

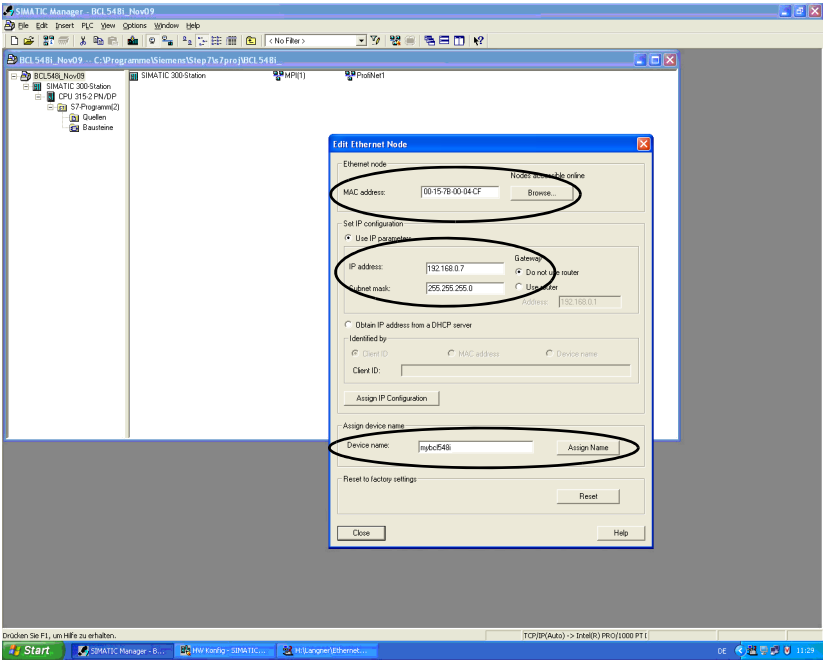

Figure 10.3: MAC address - IP address -individual device name

From now on, and when programming, only the unique "device name" (max. 255 characters) is used.

10.4.6 Step 6 – Check device names

After completing the configuration phase, it is sensible to recheck the "device names" that have been assigned. Please ensure that these names are unique and that all participants are located in the same subnet.

10.4.7 Ethernet host communication

This chapter is only of interest if an additional IP address independent of the device name is to be created for an additional communication channel, e.g. TCP/ IP. The Ethernet host communication enables the configuration of connections to an external host system. Both UDP as well as TCP/IP (in either client or server mode) can be used. The connection-free UDP protocol is used primarily to transfer process data to the host (monitor operation). The connection-oriented TCP/IP protocol can also be used to transfer commands from the host to the device. With this connection, the data is backed up by the TCP/IP protocol itself.

If you would like to use the TCP/IP protocol, you must also define whether the BCL 548*i* is to operate as a TCP client or as a TCP server.

Both protocols can be activated simultaneously and used in parallel.

↳ *Contact your network administrator to determine which communication protocol is used.*

10.4.7.1 Manually setting the IP address

If your system does not include a DHCP server or if the IP addresses of the devices are to be set permanently, proceed as follows:

↳ *Have the network administrator specify the data for IP address, net mask and gateway address of the BCL 548i.*

↳ *Set these values on the BCL 548i:*

Via webConfig tool

↳ *In the main menu, select* `Configuration`, *submenu* `Communication -> Ethernet interface`.

Notice!

If the setting is performed via the webConfig tool, the BCL 548i must be ***restarted****. Only after this restart is the set IP address accepted and does it become active.*

Or, alternatively, via the display

↳ *In the main menu, use the ▲▼ buttons to select the Parameter menu and use the enter button ↵ to activate the Parameter menu. The following screen appears:*

```
Parameter                1
  Parameter handling
  Decoder table
  Digital SWIO
  Ethernet
```

In the parameter menu, use the ▲▼ buttons to select the Ethernet menu item.

Press the enter button to enter the Ethernet menu.

```
PROFINET

o Ethernet interface
  HOST communication
```

Use the ▲▼ buttons to select the Ethernet interface menu item.

Press the enter button to enter the Ethernet interface menu.

```
Ethernet interface
o IP address
  Gateway
  Net mask
  DHCP activated
```

Use the ▲▼ buttons to successively select the IP address, Gateway and Net mask menu items and set the desired values.

Exit the Ethernet menu with the ESCAPE button.

```
Configuration changed:
System must be
restarted

   ok
   cancel
```

The message shown at the side appears. Confirm with OK to initiate a restart and to activate the changed configuration.

10.4.7.2 Automatically setting the IP address

If your system includes a DHCP server which is to be used to assign the IP addresses, proceed as follows:

Via webConfig tool

↳ *In the main menu -> Configuration -> Communication, select the "Ethernet" entry and activate DHCP there.*

Or, alternatively, via the display

↳ *In the main menu, use the ▲▼ buttons to select the Parameter menu and use the enter button ↵ to activate the Parameter menu. The following screen appears:*

Notice!

The BCL 548i responds to ping commands. A simple test to determine whether the address assignment was successful is to enter the previously configured IP address in a ping command (e.g. "ping 192.168.60.101" in a command line window under Windows).

10.4.7.3 TCP/IP

↳ *Activate the TCP/IP protocol*

↳ *Set the TCP/IP mode of the BCL 548i.*

In **TCP client mode**, the BCL 548*i* actively establishes the connection to the superior host system (PC / PLC as server). The BCL 548*i* requires from the user the IP address of the server (host system) and the port number on which the server (host system) accepts a connection. In this case, the BCL 548*i* determines when and with whom a connection is established!

↳ *With a BCL 548i as TCP client, also set the following values:*

- IP address of the TCP server (normally the PLC/host computer)
- Port number of the TCP server
- Timeout for the wait time for an answer from the server
- Repetition time for renewed communication attempt following a timeout

In **TCP server mode**, the superior host system (PC / PLC) actively establishes the connection and the connected BCL 548*i* waits for the connection to be setup. The TCP/IP stack requires information from the user regarding the local port of the BCL 548*i* (port number) on which the connection requests of a client application (host system) are to be accepted. If there is a connection request and a connection is established by the superior host system (PC / PLC as client), the BCL 548*i* (server mode) accepts the connection. Data can then be sent and received.

↳ *With a BCL 548i as TCP server, also set the following values:*

- Port number for the communication of the BCL 548*i* with the TCP client

The corresponding adjustment options can be found:

- Via webConfig:
- Configuration -> Communication -> Host communication
- Or, alternatively, via the display

```
Parameter                1
  Parameter handling
  Decoder table
  Digital SWIO
  Ethernet
```

In the parameter menu, use the ▲▼ buttons to select the Ethernet menu item.

Press the enter button to enter the Ethernet menu.

```
Ethernet
  Ethernet interface
o HOST communication
```

Use the ▲▼ buttons to select the Host communication menu item.

Press the enter button to enter the Host communication menu.

```
Host communication
o TcpIP
  UDP
```

Use the ▲▼ buttons to select the TcpIP menu item.

Press the enter button to enter the TcpIP menu.

```
TcpIP
o Activated
  Mode
  TcpIP client
  TcpIP server
```

Use the ▲▼ buttons to successively select the Activated, Mode and TcpIP Client or TcpIP Server menu items and set the desired values.

10.4.7.4 UDP

The BCL 548*i* requires from the user the IP address and the port number of the communication partner. Correspondingly, the host system (PC / PLC) now also requires the set IP address of the BCL 548*i* and the selected port number. By assigning these parameters, a socket is formed via which the data can be sent and received.

↳ *Activate the UDP protocol*

↳ *Also set the following values:*

- IP address of the communication partner
- Port number of the communication partner

The corresponding adjustment options can be found:

- Via webConfig:
- Configuration -> Communication -> Host communication
- Or, alternatively, via the display

```
Parameter                1
  Parameter handling
  Decoder table
  Digital SWIO
  Ethernet
```

In the parameter menu, use the ▲▼ buttons to select the Ethernet menu item.

Press the enter button to enter the Ethernet menu.

```
Ethernet

  Ethernet interface
o HOST communication
```

Use the ▲▼ buttons to select the Host communication menu item.

Press the enter button to enter the Host communication menu.

```
Host communication
  TcpIP
o UDP
```

Use the ▲▼ buttons to select the UDP menu item.

Press the enter button to enter the UDP menu.

```
UDP
o Activated
  IP address
  Port number
```

Use the ▲▼ buttons to successively select the Activated, IP address and Port number menu items and set the desired values.

All other parameters required for the reading task, such as setting the code type and number of digits, etc., are set using the engineering tool of the PLC with the aid of the various available modules (see chapter 10.5).

10.5 Commissioning via the PROFINET-IO

10.5.1 General information

The BCL 548*i* is designed as a modular field device. As is the case for PROFIBUS devices, the PROFINET-IO functionality of the device is defined via parameter sets that are combined in modules (slots) and sub-modules (sub-slots). The further addressing within subslots is then accomplished via an index. The modules are included in a XML-based GSD file, which is supplied as an integral part of the device. By using a user-specific configuration tool, such as, e.g., Simatic Manager for the programmable logic control by Siemens, the required modules are integrated into a project during commissioning and its settings and parameters are adjusted accordingly. These modules are provided by the GSD file.

Notice!

All input and output modules described in this documentation are described from the controller's perspective (IO Controller):

- **Input data arrives at the controller.**
- **Output data is sent out by the controller.**

Detailed information on how to prepare the control and the GSD file may be found in chapter "Configuration steps for a Siemens Simatic S7 control" on page 118.

For the default settings of the **BCL 548*i***, please refer to the following module descriptions.

Notice!

Please note that the set data is overwritten by the PLC!
*Some controls make available a so-called "universal module". This module must not be activated for the **BCL 548*i***!*

From the perspective of the device, a distinction is made between PROFINET-IO parameters and internal parameters. PROFINET-IO parameters are all parameters that can be changed via the PROFINET-IO and are described in the following modules. Internal parameters, on the other hand, can only be changed via a service interface and retain their value even following a PROFINET-IO configuration.

During the configuration phase, the BCL receives parameter telegrams from the IO Controller (master). Before this is evaluated and the respective parameter values are set, all PROFINET-IO parameters are reset to default values. This ensures that the parameters of modules that are not selected are set to the default values.

10.5.2 Permanently defined parameters / device parameters

On the PROFINET-IO, parameters may be stored in modules or may be defined permanently in a PROFINET-IO participant.

The permanently defined parameters are called "common" parameters or device-specific parameters, depending on the configuration tool.

These parameters must always be present. They are defined outside configuration modules and are thus connected to the base module (**DAP**: **D**evice **A**ccess **P**oint that is addressed via slot 0/subslot 0

In Simatic Manager, the permanently defined parameters are set via object properties of the device. The module parameters are set via the module list of the selected device. By selecting the project properties of a module, the respective parameters may be set if required.

The following list contains the device parameters that are permanently defined in the BCL 548*i* (DAP Slot 0/Subslot 0) but are configurable. These parameters always exist and are available independent of the modules.

Parameter	Description	Addr.	Data type	Value range	Default	Unit
Profile number	Number of the activated profile. For BCL 548*i*: constant with value 0	0	UNSIGNED8	0 … 255	0	-
Code type 1	Released code type; no code means that all subsequent code tables are also deactivated. The valid number of digits also depends on the code type.	1.0 … 1.5	BitArea	0: No code 1: 2/5 Interleaved 2: Code39 3: Code32 6: UPC, UPCE 7: EAN8, EAN13 8: Code128 10: EAN Addendum 11: Codabar 12: Code93 13: GS1 DataBar Omnidirectional 14: GS1 DataBar Limited 15: GS1 DataBar Expanded	1	-
Number-of-digits mode	Specifies how the subsequent numbers of digits are to be interpreted.	2.6	Bit	0: Enumeration 1: Range	0	-
Digits 1	Decodable number of digits; in the case of a range, this number defines the lower limit.[1)]	2.0 … 2.5	UNSIGNED8	0 … 63	10	-
Digits 2	Decodable number of digits; in the case of a range, this number defines the upper limit.	3	UNSIGNED8	0 … 63	0	-
Digits 3	Decodable number of digits in the **enumeration** mode.	4	UNSIGNED8	0 … 63	0	-
Digits 4	Decodable number of digits in the **enumeration** mode.	5	UNSIGNED8	0 … 63	0	-
Digits 5	Decodable number of digits in the **enumeration** mode.	6	UNSIGNED8	0 … 63	0	-
Reading reliability	Min. reading reliability to be achieved in order to output a read code.	7	UNSIGNED8	1 … 100	4	-

Table 10.2: Device parameters

Parameter	Description	Addr.	Data type	Value range	Default	Unit
Check digit procedure	Used check digit procedure.	8.0 … 8.6	BitArea	0: Standard check digit evaluation 1: No check digit verification 2: MOD10 Weight 3 3: MOD10 Weight 2 4: MOD10 Weight 4_9 5: MOD11 Cont 6: MOD43 7: MOD16	0	-
Check digit output	Turns the check digit output on or off.	8.7	Bit	Check digit output 0: Standard 1: Not standard	0	-
Code type 2	See code type 1.	9.0 … 9.5	BitArea	See code type 1	0	-
Number-of-digits mode 2	Specifies how the subsequent numbers of digits are to be interpreted.	10.6	Bit	0: Enumeration 1: Range	0	-
Digits 2.1	Decodable number of digits; in the case of a range, this number defines the lower limit.	10.0 … 10.5	UNSIGNED8	0 … 63	0	-
Digits 2.2	Decodable number of digits; in the case of a range, this number defines the upper limit.	11	UNSIGNED8	0 … 63	0	-
Digits 2.3	Decodable number of digits in the **enumeration** mode.	12	UNSIGNED8	0 … 63	0	-
Digits 2.4	Decodable number of digits in the **enumeration** mode.	13	UNSIGNED8	0 … 63	0	-
Digits 2.5	Decodable number of digits in the **enumeration** mode.	14	UNSIGNED8	0 … 63	0	-
Reading reliability 2	Min. reading reliability to be achieved in order to output a read code.	15	UNSIGNED8	1 … 100	4	-
Check digit procedure 2	Used check digit procedure.	16.0 … 16.6	BitArea	0: Standard check digit evaluation 1: No check digit verification 2: MOD10 Weight 3 3: MOD10 Weight 2 4: MOD10 Weight 4_9 5: MOD11 Cont 6: MOD43 7: MOD16	0	-
Check digit output 2	Turns the check digit output on or off.	16.7	Bit	Check digit output 0: Standard 1: Not standard	0	-

Table 10.2: Device parameters (cont.)

Parameter	Description	Addr.	Data type	Value range	Default	Unit
Code type 3	See code type 1.	17.0 … 17.5	BitArea	See code type 1	0	-
Number-of-digits mode 3	Specifies how the subsequent numbers of digits are to be interpreted.	18.6	Bit	0: Enumeration 1: Range	0	-
Digits 3.1	Decodable number of digits; in the case of a range, this number defines the lower limit.	18.0 … 18.5	UNSIGNED8	0 … 63	0	-
Digits 3.2	Decodable number of digits; in the case of a range, this number defines the upper limit.	19	UNSIGNED8	0 … 63	0	-
Digits 3.3	Decodable number of digits in the **enumeration** mode.	20	UNSIGNED8	0 … 63	0	-
Digits 3.4	Decodable number of digits in the **enumeration** mode.	21	UNSIGNED8	0 … 63	0	
Digits 3.5	Decodable number of digits in the **enumeration** mode.	22	UNSIGNED8	0 … 63	0	-
Reading reliability 3	Min. reading reliability to be achieved in order to output a read code.	23	UNSIGNED8	1 … 100	4	-
Check digit procedure 3	Used check digit procedure.	24.0 … 24.6	BitArea	0: Standard check digit evaluation 1: No check digit verification 2: MOD10 Weight 3 3: MOD10 Weight 2 4: MOD10 Weight 4_9 5: MOD11 Cont 6: MOD43 7: MOD16	0	-
Check digit output 3	Turns the check digit output on or off.	24.7	Bit	Check digit output 0: Standard 1: Not standard	0	-
Code type 4	See code type 1.	25.0 … 25.5	BitArea	See code type 1	0	-
Number-of-digits mode 4	Specifies how the subsequent numbers of digits are to be interpreted.	26.6	Bit	0: Enumeration 1: Range	0	-
Digits 4.1	Decodable number of digits; in the case of a range, this number defines the lower limit.	26.0 … 26.5	UNSIGNED8	0 … 63	0	-
Digits 4.2	Decodable number of digits; in the case of a range, this number defines the upper limit.	27	UNSIGNED8	0 … 63	0	-
Digits 4.3	Decodable number of digits in the **enumeration** mode.	28	UNSIGNED8	0 … 63	0	-
Digits 4.4	Decodable number of digits in the **enumeration** mode.	29	UNSIGNED8	0 … 63	0	
Digits 4.5	Decodable number of digits in the **enumeration** mode.	30	UNSIGNED8	0 … 63	0	-
Reading reliability 4	Min. reading reliability to be achieved in order to output a read code.	31	UNSIGNED8	1 … 100	4	-
Check digit procedure 4	Used check digit procedure.	32.0 … 32.6	BitArea	0: Standard check digit evaluation 1: No check digit verification 2: MOD10 Weight 3 3: MOD10 Weight 2 4: MOD10 Weight 4_9 5: MOD11 Cont 6: MOD43 7: MOD16	0	-
Check digit output 4	Turns the check digit output on or off.	32.7	Bit	Check digit output 0: Standard 1: Not standard	0	-

Table 10.2: Device parameters (cont.)

1) Specifying a 0 for the number of digits means that this entry is ignored for the device.

Parameter length: 33 byte

Input data

None

Output data

None

Notice on number of digits:

If 0 is specified in a field for the number of digits, the corresponding parameter is ignored by the device firmware.

Example:

For a code table entry x, the two code lengths 10 and 12 are to be enabled. For this purpose, the following number of digit entries are necessary:

Number of digits mode x = 0 (enumeration)

Number of digits x.1 = 10

Number of digits x.2 = 12

Number of digits x.3 = 0

Number of digits x.4 = 0

Number of digits x.5 = 0

10.6 Overview of the project modules

When using PROFINET-IO modules, the parameters are assembled dynamically, i.e., only the parameters that were selected by the activated modules are changed.

The BCL has parameters (device parameters) that must always be present. These parameters are defined outside of modules and are thus linked to the base module (DAP).

In the current version, a total of 56 modules are available for use. A **Device Module** (**DAP**, see "Permanently defined parameters / device parameters" on page 130) is used for basic scanner configuration of the BCL 548*i* and is permanently integrated into the project. Further modules may be included into the project according to requirements and application.

The modules fall into the following categories:

- Parameter module for the configuration of the BCL 548*i*
- Status or control modules that influence the input/output data.
- Modules that may include both parameters and control or status information.

A PROFINET-IO module defines the existence and meaning of the input and output data. In addition, it defines the necessary parameters. The arrangement of the data within a module is defined.

The composition of the input/output data is defined via the module list.

The BCL 548*i* interprets the incoming output data and triggers the appropriate reactions in the BCL 548*i*. The interpreter for processing the data is adapted to the module structure during initialization.

The same applies for the input data. Using the module list and the defined module properties, the input data string is formatted and referenced to the internal data.

During cyclic operation, the input data is then passed on to the IO Controller.

During the startup or initialization phase, the BCL 548*i* sets the input data to an initial value (usually 0).

Notice!

The modules can be grouped together in any order in the engineering tool. Note, however, that many BCL 548i modules contain linked data (e.g., the decoding result modules 20-41). It is important to maintain the ***consistency of these data****.*
The BCL 548i offers 56 different modules. Each of these modules may only be selected once; otherwise, the BCL 548i ignores the configuration.
The BCL 548i checks its max. permissible number of modules. The control also reports an error if the input and output data across all selected modules exceed a total length of 1024 bytes.
The specific limits of the individual modules of the BCL 548i are declared in the GSD file.

The following module overview shows the characteristics of the individual modules:

Module	Description	Module identifier	Submodule identifier	Parameter 1)	Outp. data	Inp. data
Device parameters	Module independent device parameters	1	0	33	0	0
Interface PN-IO	Ethernet interface description	1	1	0	0	0
Port 1	Ethernet Port 1	1	2	0	0	0
Port 2	Ethernet Port 2	1	3	0	0	0
Decoder						
Code table extension 1	Extension of the existing code table	1001	1	8	0	0
Code table extension 2	Extension of the existing code table	1002	1	8	0	0
Code table extension 3	Extension of the existing code table	1003	1	8	0	0
Code table extension 4	Extension of the existing code table	1004	1	8	0	0
Code type properties	The module permits changing the muted zones as well as the line-gap ratios	1005	1	6	0	0
Code fragment technology	Support of code fragment technology	1007	1	4	0	0
Control						
Activations	Control bits for activation of the standard reading operation	1010	1	1	0	1
Reading gate control	Extended control of the reading gate	1011	1	6	0	0
Multilabel	Output of several bar codes per reading gate	1012	1	2	1	0
Fragmented read result	Transmission of the read results in the fragmented mode	1013	1	1	2	0
Interlinked read result	Interlinking of the individual read results within one reading gate	1014	1	1	0	0
Result Format						
Decoder state	Status display - decoding	1020	1	0	1	0
Decoding result 1	Bar code information 4 bytes max.	1021	1	0	6	0
Decoding result 2	Bar code information 8 bytes max.	1022	1	0	10	0
Decoding result 3	Bar code information 12 bytes max.	1023	1	0	14	0
Decoding result 4	Bar code information 16 bytes max.	1024	1	0	18	0
Decoding result 5	Bar code information 20 bytes max.	1025	1	0	22	0
Decoding result 6	Bar code information 24 bytes max.	1026	1	0	26	0
Decoding result 7	Bar code information 28 bytes max.	1027	1	0	30	0
Data formatting	Specification for formatting the data output	1030	1	23	0	0
Reading gate number	Number of the reading gate since system start-up	1031	1	0	2	0
Reading gate time	Time between opening and closing	1032	1	0	2	0
Code position	Relative position of the bar code label in the scanning beam	1033	1	0	2	0
Reading reliability	Calculated reading reliability for the transmitted bar code.	1034	1	0	2	0
Scans per bar code	Number of scans between the first and the last time of detecting the bar code	1035	1	0	2	0
Scans with information	Number of scans with processed information	1036	1	0	2	0
Decoding quality	Quality of the read result	1037	1	0	1	0
Code direction	Orientation of the bar code	1038	1	0	1	0
Number of digits	Number of digits in the bar code	1039	1	0	1	0
Code type	Bar code type	1040	1	0	1	0
Code position in the swivel range	Code position in the swivel range of an oscillating mirror device	1041	1	0	2	0
Data Processing						
Characteristics filter	Configuration of the characteristics filter	1050	1	0	0	0
Data filtering	Configuration of the data filtering	1051	1	60	0	0
Segmentation acc. to the EAN process	Activation and configuration of the segmentation acc. to the EAN process	1052	1	27	0	0

Table 10.3: Module overview

Module	Description	Module identifier	Submodule identifier	Parameter 1)	Outp. data	Inp. data
Segmentation via fixed positions	Activation and configuration of the segmentation via fixed positions	1053	1	37	0	0
Segmentation acc. to identifier and separator	Activation and configuration of the segmentation acc. to identifier and separator	1054	1	29	0	0
String handling parameter	Definition of placeholder characters for bar code segmentation, filtering, completion and reference code processing	1055	1	3	0	0
Device-Functions						
Device status	Display of the device status as well as control bits for reset and standby	1060	1	0	1	1
Laser control	Switch-on and switch-off positions of the laser	1061	1	4	0	0
Display	Display parameter settings	1062	1	3	0	0
Alignment	Alignment mode	1063	1	0	1	1
Oscillating mirror	Oscillating mirror parameter settings	1064	1	6	0	0
Deflection mirror	Deflection mirror parameter settings	1065	1	2	0	0
Switching inputs/ outputs SWIO or Device-IO						
Switching input/output SWIO1	Parameter settings SWIO1	1070	1	23	0	0
Switching input/output SWIO2	Parameter settings SWIO2	1071	1	23	0	0
Switching input/output SWIO3	Parameter settings SWIO3	1072	1	23	0	0
Switching input/output SWIO4	Parameter settings SWIO4	1073	1	23	0	0
SWIO status and control	Handling of switching input and switching output signals	1074	1	0	2	1
Data output						
Sorting	Sorting support	1080	1	3	0	0
Reference code comparator 1	Definition of the operation mode of reference code comparator 1	1081	1	8	0	0
Reference code comparator 2	Definition of the operation mode of reference code comparator 2	1082	1	8	0	0
Reference code comparison pattern 1	Definition of the 1st comparison pattern	1083	1	31	0	0
Reference code comparison pattern 2	Definition of the 2nd comparison pattern	1084	1	31	0	0
Special Functions						
Status and control	Grouping of multiple status and control bits	1090	1	0	1	0
AutoReflAct	Automatic reflector activation	1091	1	2	0	0
AutoControl	Automatic monitoring of the reading properties	1092	1	3	1	0

Table 10.3: Module overview (cont.)

1) The number of parameter bytes does not include the constant module number, which is always transmitted in addition.

Notice!

For the standard case, at least module 10 (activation) and one of modules 21 … 27 (decoding result 1 … 7) should be integrated.

10.7 Decoder modules

10.7.1 Modules 1-4 – Code table extensions 1 to 4

PROFINET-IO module identifier

Module-ID 1001…1004

Submodule-ID 1

Description

The modules extend the code type tables of the device parameters and permit the additional definition of further 4 code types together with the respective number of digits.

Parameter

Parameter	Description	Rel. addr.	Data type	Value range	Default	Unit
Code type	Released code type; no code means that all subsequent code tables are also deactivated. The valid number of digits also depends on the code type.	0.0 … 0.5	BitArea	0: No code 1: 2/5 Interleaved 2: Code39 3: Code32 6: UPC, UPCE 7: EAN8, EAN13 8: Code128 10: EAN Addendum 11: Codabar 12: Code93 13: GS1 DataBar Omnidirectional 14: GS1 DataBar Limited 15: GS1 DataBar Expanded	0	-
Number-of-digits mode	Interpretation of the number of digits	1.6	Bit	0: Enumeration 1: Range	0	-
Digits 1[1)]	Decodable number of digits; in the case of a range, this number defines the lower limit.	1.0 … 1.5	UNSIGNED8	0 … 63	0	-
Digits 2	Decodable number of digits; in the case of a range, this number defines the upper limit.	2	UNSIGNED8	0 … 63	0	-
Digits 3	Decodable number of digits in the enumeration mode.	3	UNSIGNED8	0 … 63	0	-
Digits 4	Decodable number of digits in the enumeration mode.	4	UNSIGNED8	0 … 63	0	-
Digits 5	Decodable number of digits in the enumeration mode.	5	UNSIGNED8	0 … 63	0	-

Table 10.4: Parameters for modules 1-4

Parameter	Description	Rel. addr.	Data type	Value range	Default	Unit
Reading reliability	Min. reading reliability to be achieved in order to output a read code.	6	UNSIGNED8	1 … 100	4	-
Check digit procedure	Used check digit procedure	7.0 … 7.6	BitArea	0: Standard check digit evaluation 1: No check digit verification 2: MOD10 Weight 3 3: MOD10 Weight 2 4: MOD10 Weight 4_9 5: MOD11 Cont 6: MOD43 7: MOD16	0	-
Check digit output	Turns the check digit output on or off. Standard means that the check digit is transmitted according to the applicable standard for the selected code type. If **no check digit transmission is intended** for the selected code type, then "**Standard**" means that the check digit is **not** transmitted and "**Not Standard**" means that the check digit is transmitted anyway.	7.7	Bit	Check digit output 0: Standard 1: Not standard	0	-

Table 10.4: Parameters for modules 1-4 (cont.)

1) Cf. in section 10.5.2 Permanently defined parameters / device parameters the notice on number of digits.

Parameter length

8 bytes

Input data

None

Output data

None

10.7.2 Module 5 – Code type features (symbology)

PROFINET-IO module identifier

Module-ID 1005

Submodule-ID 1

Description

The module defines extended features for various code types.

Parameter

Parameter	Description	Addr.	Data type	Value range	Default	Unit
Maximum width deviation	Max. permitted width deviation of a character in percent of the directly adjacent character.	0	UNSIGNED8	0 … 100	15	%
Code 39 max. element ratio	Permissible ratio between maximum and minimum element of Code 39.	1	UNSIGNED8	0 … 255	8	-
Code 39 character gap	Permissible ratio for the gap between two characters for Code 39.	2	UNSIGNED8	0 … 255	3	-
Codabar max. element ratio	Permissible ratio between maximum and minimum element of the Codabar code.	3	UNSIGNED8	0 … 255	8	-
Codabar character gap	Permissible ratio for the gap between two characters for the Codabar code.	4	UNSIGNED8	0 … 255	3	-
Codabar Monarch Mode	The decoding of a Monarch bar code as Codabar bar code can be switched on or off.	5.0	Bit	0: Off 1: On	0	-
Codabar start/ stop character	Switches the transmission of a start and stop character for the Codabar code on and off.	5.1	Bit	0: Off 1: On	0	-
UPC-E extension	Switches the extension of a UPC-E code to a UPC-A result on and off.	5.4	Bit	0: Off 1: On	1	-
Code 128: activate EAN header	Switches the output of the EAN header on and off.	5.5	Bit	0: Off 1: On	0	-
Code 39 conversion	Defines the conversion method used for Code 39.	5.6 … 5.7	BitArea	0: Standard (usual conversion method) 1: Standard ASCII (combination of standard method and ASCII method) 2: ASCII (This conversion method uses the entire ASCII character set)	0	-

Table 10.5: Parameters for module 5

Parameter length

6 byte

Input data

None

Output data

None

10.7.3 Module 7 – Code fragment technology

PROFINET-IO module identifier

Module-ID 1007

Submodule-ID 1

Description

Module for supporting the code fragment technology.

Parameter

Parameter	Description	Addr.	Data type	Value range	Default	Unit
Maximum width ratio	The maximum width ratio is used to determine the light zones. The light zones identify the beginning or end of patterns.	0	UNSIGNED8	0 … 255	13	-
Minimum number of elements	A pattern must have at least this minimum number of duo-elements, i.e. no patterns which have fewer duo-elements.	1 … 2	UNSIGNED16	2 … 400	6	-
Code fragment mode	This parameter can be used to switch CRT mode on and off.	3.0	Bit	0: Switched off 1: Switched on	1	-
Processing end at end of label	If this parameter is set, a decoded bar code is only completely decoded after the scanning beam has exited the entire bar code.	3.2	Bit	0: Switched off 1: Switched on	0	-

Table 10.6: Parameters for module 7

Parameter length

4 byte

Input data

None

Output data

None

Processing end at end of label:

If this parameter is set, a decoded bar code is only completely decoded after the scanning beam has exited the entire bar code. This mode is useful if the quality of the bar code is to be assessed, since more scans are now available for the quality evaluation of the bar code.

This parameter should be set if the AutoControl function is activated (see chapter 10.16.3 "Module 92 – AutoControl"). If the parameter is not set, the bar code is immediately detected and processed further as soon as all necessary bar code elements are available.

10.8 Control modules

10.8.1 Module 10 – Activations

PROFINET-IO module identifier

Module-ID 1010

Submodule-ID 1

Description

The module defines the control signals for the reading operation of the bar code reader. It is possible to select between standard reading operation and handshake operation.

In handshake operation, the controller must acknowledge the data reception via the ACK bit before the new data is written into the input area.

After acknowledging the last decoding result, the input data is reset (filled with zeros).

Parameter

Parameter	Description	Addr.	Data type	Value range	Default	Unit
Mode	The parameter defines the mode in which the activation module is operated.	0	UNSIGNED8	0:Without ACK[1)] 1:With ACK[2)]	0	-

Table 10.7: Parameters for module 10

1) corresponds to BCL34 module 18
2) corresponds to BCL34 module 19

Parameter length

1 byte

Input data

None

Output data

Output data	Description	Addr.	Data type	Value range	Init value	Unit
Reading gate	Signal for activating the reading gate	0.0	Bit	1 -> 0: Reading gate off 0 -> 1: Reading gate active	0	-
	Free	0.1	Bit		0	-
	Free	0.2	Bit		0	-
	Free	0.3	Bit		0	-
Data acknowledgement	This control bit signals that the transmitted data have been processed by the master. Only relevant in handshake mode (with ACK).	0.4	Bit	0 -> 1: Data has been processed by the master 1 -> 0: Data has been processed by the master	0	-

Table 10.8: Output data for module 10

Output data	Description	Addr.	Data type	Value range	Init value	Unit
Data reset	Deletes decoding results that may have been stored and resets the input data of all modules.	0.5	Bit	0 -> 1: Data reset	0	-
	Free	0.6	Bit			
	Free	0.7	Bit			

Table 10.8: Output data for module 10 (cont.)

Output data length

1 byte consistent

Notice!

If several bar codes are decoded in sequence without the acknowledge mode having been activated, the input data of the result modules are overwritten with the respective most recently read decoding result.
If a data loss in the control is to be avoided in such a case, mode 1 (with Ack) should be activated.
If multiple decoding results occur within one reading gate, it is possible - dependent on the cycle time - that only the last decoding result is visible on the bus. In this case, the acknowledge mode MUST be used. There is otherwise a risk of data loss.
Multiple, individual decoding results may occur within one reading gate if the Module 12 – Multi-label (see chapter 10.8.3) or one of the identifier modules (see chapter 10.11 "Identifier" beginning on page 163) is used.

Data reset behavior:

If the data reset control bit is activated, the following actions are carried out:

1. Deletion of decoding results that may still be stored.
2. Reset of module 13 - fragmented read result (see chapter 10.8.4), i.e., even a partially transmitted read result is deleted.
3. Deletion of the input data areas of all modules. Exception: The input data of module 60 - device status (see chapter 10.12.1) is not deleted. For the status byte of decoding result modules 20 … 27 (see chapter 10.9.2), the two toggle bytes and the reading gate status remain unchanged.

10.8.2 Module 11 – Reading gate control

PROFINET-IO module identifier

Module-ID 1011

Submodule-ID 1

Description

With the module, the reading gate control of the bar code reader can be adapted to the application. With different parameters from the bar code reader, a time-controlled reading gate may be created. In addition, it defines the internal criteria for the reading gate end and the completeness inspection.

Parameter

Parameter	Description	Addr.	Data type	Value range	Default	Unit
Automatic reading gate repeat	The parameter defines the automatic repeat of reading gates	0	Byte	0: No 1: Yes	0	-
Reading gate end mode/ completeness mode	This parameter can be used to configure the completeness inspection.	1	Byte	0: **Independent of decoding**, i.e., the reading gate is not terminated prematurely. 1: **Dependent on decoding**, i.e, the reading gate is terminated if the configured number of bar codes to be decoded has been reached. 1) 2: **DigitRef table-dependent**, i.e., the reading gate is terminated if each bar code stored in the code type table has been decoded. 2) 3: **Ident list dependent**, i.e., the reading gate is terminated if each identifier stored in a list could be segmented via a respective bar code segmentation. 3) 4: **Reference code comparison**, i.e., the reading gate is terminated if a positive reference code comparison has taken place. 4)	1	-

Table 10.9: Parameters for module 11

Parameter	Description	Addr.	Data type	Value range	Default	Unit
Restart delay	The parameter specifies a time after which a reading gate is restarted. The BCL 548*i* generates its own periodic reading gate. The configured time is active only if the automatic reading gate repeat is switched on.	2	UNSIGNED16	0 … 65535	0	ms
Max. reading gate time when scanning	The parameter switches off the reading gate after the set time has elapsed, thus limiting the reading gate to the set period.	4	UNSIGNED16	1 … 65535 0: Reading gate deactivation is switched off.	0	ms

Table 10.9: Parameters for module 11 (cont.)

1) See "Module 12 – Multi-label" on page 145.
2) Corresponds to the settings carried out via the device module (chapter 10.5.2) or Modules 1-4 – Code table extensions 1 to 4.
3) See "Identifier" on page 163, modules 52-54 "Identifier filter string"
4) See Module 83 – Reference code comparison pattern 1 and Module 84 – Reference code comparison pattern 2

Parameter length

6 byte

Input data

None

Output data

None

10.8.3 Module 12 – Multi-label

PROFINET-IO module identifier

Module-ID 1012

Submodule-ID 1

Description

The module permits the definition of multiple bar codes with a different number of digits and/or code types in the reading gate and provides the necessary input data.

Parameter

Parameter	Description	Addr.	Data type	Value range	Default	Unit
Minimum number of bar codes	Minimum number of different bar codes scanned for per reading gate.	0	UNSIGNED8	0 … 64	0	-
Maximum number of bar codes	Maximum number of different bar codes scanned for per reading gate. Only if this number of bar codes has been reached, the reading gate is terminated prematurely.[1)]	1	UNSIGNED8	0 … 64	1	-

Table 10.10: Parameters for module 12

1) Compare with "Module 11 – Reading gate control" on page 143, parameter "reading gate termination mode"

Parameter length

2 bytes

Input data

Input data	Description	Addr.	Data type	Value range	Init value	Unit
Number of decoding results	Number of decoding results which have not been fetched.	0	UNSIGNED8	0 … 255	0	-

Table 10.11: Input data for module 12

Input data length

1 byte

Output data

None

This module is used to set the maximum and minimum number of bar codes which are to be decoded within a reading gate.

If parameter "minimum number of bar codes" = 0, it is not taken into account at the decoder controller. If it is not equal to 0, this means that the bar code reader expects a number of labels within the set range. If the number of decoded bar codes is within the set limits, no additional "No Reads" are output.

Notice!

When using this module, the ACK mode should be activated (see Module 10 – Activations, "Mode" parameter). Otherwise there is a risk of losing decoding results if the control is not fast enough.

10.8.4 Module 13 – Fragmented read result

PROFINET-IO module identifier

Module-ID 1013

Submodule-ID 1

Description

The module defines the transfer of fragmented read results. To occupy few i/o-data, the read results may be split into several fragments with this module. The fragments can then be transmitted one after another with a handshake.

Parameter

Parameter	Description	Addr.	Data type	Value range	Default	Unit
Fragment length	The parameter defines the maximum length of the bar code information per fragment.	0	UNSIGNED8	1 … 28	1	-

Table 10.12: Parameters for module 13

Parameter length

1 byte

Input data

Input data	Description	Addr.	Data type	Value range	Init value	Unit
Fragment number	Current fragment number	0.0 … 0.3	Bitarea	0 … 15	0	-
Remaining fragments	Number of fragments which still have to be read for a complete result.	0.4 … 0.7	Bitarea	0 … 15	0	-
Fragment size	Fragment length, always corresponds to the configured fragment length, except for the last fragment.	1	UNSIGNED8	0 … 28	0	-

Table 10.13: Input data for module 13

Input data length

2 byte consistent

Output data

None

10.8.5 Module 14 – Interlinked read result

PROFINET-IO module identifier

Module-ID 1014

Submodule-ID 1

Description

This module is used to switch to a mode in which all decoding results within one reading gate are combined into a single read result.

Parameter

Parameter	Description	Addr.	Data type	Value range	Default	Unit
Delimiter	This parameter is used to define a delimiter that is inserted between two individual decoding results.	0	UNSIGNED8	1 … 255 0:No delimiter is used.	';'	-

Table 10.14: Parameters for module 13

Parameter length

1 byte

Input data

None

Output data

None

Notice!

An interlinked read result also requires Module 12 – Multi-label. In this mode, the additional information transmitted in modules 31ff relates to the last decoding result in the chain.

10.9 Result Format

In the following various modules for the output of decoding results are listed. They have the same structure but different output lengths. The PROFINET-IO module concept does not cater for modules of variable data length.

Notice!

Modules 20 … 27 are, thus, to be regarded as alternatives and should not be used in parallel. Modules 30 … 41, on the other hand, can be combined freely with the decoding result modules.

10.9.1 Module 20 – Decoder state

PROFINET-IO module identifier

Module-ID 1020

Submodule-ID 1

Description

The module indicates the state of the decoding and of the automatic decoder configuration.

Parameter

None

Input data

Input data	Description	Addr.	Data type	Value range	Init value	Unit
Reading gate state	The signal indicates the current state of the reading gate[1].	0.0	Bit	0: Off 1: On	0	-
New result	The signal indicates whether a new decoding has occurred.	0.1	Bit	0: No 1: Yes	0	-
Result state	The signal indicates whether the bar code has been read successfully.	0.2	Bit	0: Successful reading 1: NOREAD	0	-
Further results in the buffer	The signal indicates whether further results are in the buffer.	0.3	Bit	0: No 1: Yes	0	-
Buffer overflow	The signal indicates that result buffers are occupied and the decoder rejects data.	0.4	Bit	0: No 1: Yes	0	-
New decoding	Toggle bit indicates whether decoding has occurred.	0.5	Bit	0->1: New result 1->0: New result	0	-
Result state	Toggle bit indicates that the bar code has not been read.	0.6	Bit	0->1: NOREAD 1->0: NOREAD	0	-
Waiting for acknowledgement	This signal represents the internal state of the control.	0.7	Bit	0: Base state 1: Control waiting for acknowledgement from the IO Controller	0	-

Table 10.15: Input data for module 20

1) **Attention**: This does not necessarily correspond to the state at the time the bar code is scanned.

Input data length

1 byte

Output data

None

Remarks

The following bits are constantly updated, i.e. they are updated immediately after the respective event occurs:

Reading gate state

- Further results in the buffer
- Buffer overflow
- Waiting for acknowledgement

All other flags refer to the currently output decoding result.

If the input data is reset to the init. value (cf. "Module 30 – Data formatting" on page 152), the following bits are reset:

- New result
- Result state

All others remain unchanged.

Data reset behavior:

Upon data reset (see Module 10 – Activations), the input data is deleted, except for the reading gate status and the two toggle bits.

10.9.2 Modules 21-27 – Decoding result

PROFINET-IO module identifier

Module-ID 1021…1027

Submodule-ID 1

Description

The module defines the transfer of the actually decoded read results. The data is transmitted consistently over the entire range.

Parameter

None

Input data

Module No.	Input data	Description	Addr.	Data type	Value range	Init value	Unit
21 … 27	Reading gate state	The signal indicates the current state of the reading gate.[1)]	0.0	Bit	0: Off 1: On	0	-
21 … 27	New result	Signal indicates whether a new decoding result is present.	0.1	Bit	0: No 1: Yes	0	-
21 … 27	Result state	Signal indicates whether the bar code has been read successfully.	0.2	Bit	0: Successful reading 1: NOREAD	0	-
21 … 27	Further results in the buffer	Signal indicates whether further results are in the buffer.	0.3	Bit	0: No 1: Yes	0	-
21 … 27	Buffer overflow	Signal indicates that result buffers are occupied and the decoder rejects data.	0.4	Bit	0: No 1: Yes	0	-
21 … 27	New result	Toggle bit, indicates that a new decoding result is present.	0.5	Bit	0->1: New result 1->0: New result	0	-
21 … 27	Result state	Toggle bit indicates that the bar code has not been read.	0.6	Bit	0->1: NOREAD 1->0: NOREAD	0	-
21 … 27	Waiting for acknowledge-ment	This signal represents the internal state of the control.	0.7	Bit	0: Base state 1: Control waiting for acknowledgement from the IO Controller	0	-
21 … 27	Bar code data length	Data length of the actual bar code information.[2)]	1	UNSIGNED8	0-48	0	-
21	Data	Bar code information with a length of consistently 4 bytes.	2..	4x UNSIGNED8	0-FFh	0	-
22	Data	Bar code information with a length of consistently 8 bytes.	2..	8x UNSIGNED8	0-FFh	0	-
23	Data	Bar code information with a length of consistently 12 bytes.	2..	12x UNSIGNED8	0-FFh	0	-
24	Data	Bar code information with a length of consistently 16 bytes.	2..	16x UNSIGNED8	0-FFh	0	-
25	Data	Bar code information with a length of consistently 20 bytes.	2..	20x UNSIGNED8	0-FFh	0	-
26	Data	Bar code information with a length of consistently 24 bytes.	2..	24x UNSIGNED8	0-FFh	0	-
27	Data	Bar code information with a length of consistently 28 bytes.	2..	28x UNSIGNED8	0-FFh	0	-

Table 10.16: Input data for modules 21 … 27

1) Attention: This does not necessarily correspond to the state at the time the bar code is scanned

2) If the bar code information (bar code and, possibly, other items such as the check sum) fits in the selected module width, this value reflects the length of the transmitted data. A value larger than the module width indicates a loss of information caused by a module width which has been selected too small.

Input data

2 bytes consistently + 4..28 bytes of bar code information depending on the module

Output data

None

Remarks

The remarks for module 20 – decoder state, apply in an analogous manner.

In addition, all bytes beginning with address 1 are reset to the init. value.

Notice!

Shortening decoding results that are too long: If the bar code information (bar code possibly including supplementary information such as the check sum) does not fit in the selected module width, the decoding results are shortened. This shortening is either from the left or the right depending on the setting in Module 30 – Data formatting.

Shortening is indicated by the passed bar code data length.

10.9.3 Module 30 – Data formatting

PROFINET-IO module identifier

Module-ID 1030

Submodule-ID 1

Description

The module defines the output string for the case that the BCL 504*i* could not read a bar code. In addition, the initialization of the data fields and the definition of unused data ranges may be set.

Parameter

Parameter	Description	Addr.	Data type	Value range	Default	Unit
Text in the case of mis-reading	The parameter defines the output characters if no bar code could be read.	0	STRING 20 characters null terminated	1 … 20 bytes of ASCII characters	63 („?“)	-
Decoding result at read-ing gate start	The parameter defines the state of the data at the start of the reading gate.	20.5	Bit	0: Input data remain on the old value 1: Input data is reset to the init value	0	-
Data align-ment	The parameter defines the alignment of the data in the result field[1)]	21.1	Bit	0: Left-justified 1: Right-justified	0	-
Fill mode	The parameter defines the fill mode for the unoccupied data ranges	21.4 … 21.7	Bitarea	0: No fill up 3: Fill up to the trans-mission length	3	-
Fill character	The parameter defines the character which is used for filling up the data ranges.	22	UNSIGNED8	0 … FFh	0	-

Table 10.17: Parameters for module 30

1) and thus also controls possible shortening of a decoding result that is too large.

Parameter length

23 byte

Input data

None

Output data

None

Comment

The "decoding result at reading gate start" parameter is only taken into account if the "Without ACK" mode is set (cf. "Module 10 – Activations" on page 141).

Notice!

The text for erroneous readings does not permit the use of ASCII characters that cannot be displayed (<0x20h).

10.9.4 Module 31 – Reading gate number

PROFINET-IO module identifier

Module-ID 1031

Submodule-ID 1

Description

The module defines input data for the communication of the number of reading gates since system start.

Parameter

None

Input data

Input data	Description	Addr.	Data type	Value range	Init value	Unit
Reading gate number	The BCL 548*i* transmits the current reading gate number. The reading gate number is initialized with the system start and is then incremented continuously. At 65535, an overflow occurs and the counter starts afresh from 0.	0 … 1	UNSIGNED16	0 … 65535	0	-

Table 10.18: Input data for module 31

Input data length

2 byte consistent

Output data

None

10.9.5 Module 32 – Reading gate time

PROFINET-IO module identifier

Module-ID 1032

Submodule-ID 1

Description

This module returns the time between opening and closing of the last reading gate.

Parameter

None

Input data

Input data	Description	Addr.	Data type	Value range	Init value	Unit
Opening duration of the reading gate	Opening duration of the last reading gate in ms.	0 … 1	UNSIGNED16	0 … 65535 If the range is exceeded, the value remains at 65535	0	ms

Table 10.19: Input data for module 32

Input data length

2 byte consistent

Output data

None

10.9.6 Module 33 – Code position

PROFINET-IO module identifier

Module-ID 1033

Submodule-ID 1

Description

The module defines input data for the communication of the relative bar code position in the laser beam.

Parameter

None

Input data

Input data	Description	Addr.	Data type	Value range	Init value	Unit
Code position	Relative position of the bar code in the scanner beam. The position is normalized to the zero position (middle position). Specified in 1/10 degrees.	0 … 1	SIGNED16	±450	0	1/10 degree

Table 10.20: Input data for module 33

Input data length

2 byte consistent

Output data

None

10.9.7 Module 34 – Reading reliability (equal scans)

PROFINET-IO module identifier

Module-ID 1034

Submodule-ID 1

Description

The module defines the input data for the communication of the calculated reading reliability. The value refers to the currently output bar code.

Parameter

None

Input data

Input data	Description	Addr.	Data type	Value range	Init value	Unit
Reading reliability (Equal scans)	Calculated reading reliability for the transmitted bar code.	0 … 1	UNSIGNED16	0 … 65535	0	-

Table 10.21: Input data for module 34

Input data length

2 byte consistent

Output data

None

10.9.8 Module 35 – Bar code length

PROFINET-IO module identifier

Module-ID 1035

Submodule-ID 1

Description

The module defines the input data for the communication of the length of the currently output bar code.

Parameter

None

Input data

Input data	Description	Addr.	Data type	Value range	Init value	Unit
Bar code length	Length/duration of the currently output bar code, beginning with the code position specified in module 35 in 1/10 degrees.	0 … 1	UNSIGNED16	1 … 900	1	1/10 degree

Table 10.22: Input data for module 35

Input data length

2 byte consistent

Output data

None

10.9.9 Module 36 – Scans with information

PROFINET-IO module identifier

Module-ID 1036

Submodule-ID 1

Description

The module defines input data for the communication of the calculated number of scans which provided information contributing to the result of the bar code.

Parameter

None

Input data

Input data	Description	Addr.	Data type	Value range	Init value	Unit
Scans with information per bar code	See above	0 … 1	UNSIGNED16	0 … 65535	0	-

Table 10.23: Input data for module 36

Input data length

2 byte consistent

Output data

None

10.9.10 Module 37 – Decoding quality

PROFINET-IO module identifier

Module-ID 1037

Submodule-ID 1

Description

The module defines input data for the communication of the calculated decoding quality of the currently transmitted bar code.

Parameter

None

Input data

Input data	Description	Addr.	Data type	Value range	Init value	Unit
Decoding quality	Decoding quality of the transmitted bar code	0	UNSIGNED8	0 … 100	0	1%

Table 10.24: Input data for module 37

Input data length

1 byte consistent

Output data

None

10.9.11 Module 38 – Code direction

PROFINET-IO module identifier

Module-ID 1038
Submodule-ID 1

Description

The module defines input data for the communication of the detected code direction of the currently transmitted bar code.

Parameter

None

Input data

Input data	Description	Addr.	Data type	Value range	Init value	Unit
Code direction	Code direction of the transmitted bar code	0	UNSIGNED8	0: Normal 1: Inverted 2: Unknown	0	-

Table 10.25: Input data for module 38

Input data length

1 byte

Output data

None

Comment:

A decoding result of type "No Read" has as code direction the value 2 = unknown!

10.9.12 Module 39 – Number of digits

PROFINET-IO module identifier

Module-ID 1039
Submodule-ID 1

Description

The module defines input data for the communication of the number of digits of the currently transmitted bar code.

Parameter

None

Input data

Input data	Description	Addr.	Data type	Value range	Init value	Unit
Number of digits	Number of digits of the transmitted bar code	0	UNSIGNED8	0 … 48	0	-

Table 10.26: Input data for module 39

Input data length

1 byte

Output data

None

10.9.13 Module 40 – Code type (symbology)

PROFINET-IO module identifier

Module-ID 1040

Submodule-ID 1

Description

The module defines the input data for the communication of the code type of the currently transmitted bar code.

Parameter

None

Input data

Input data	Description	Addr.	Data type	Value range	Init value	Unit
Code type (symbology)	Code type of the transmitted bar code	0	UNSIGNED8	0: No code 1: 2/5 Interleaved 2: Code39 6: UPC, UPCE 7: EAN8, EAN13 8: Code128, EAN128 10: EAN Addendum 11: Codabar 12: Code93 13: GS1 DataBar Omnidirectional 14: GS1 DataBar Limited 15: GS1 DataBar Expanded	0	-

Table 10.27: Input data for module 40

Input data length

1 byte

Output data

None

10.9.14 Module 41 – Code position in the swivel range

PROFINET-IO module identifier

Module-ID 1041

Submodule-ID 1

Description

The module defines input data for the communication of the relative bar code position in the swivel range of an oscillating mirror device.

Parameter

None

Input data

Input data	Description	Addr.	Data type	Value range	Init value	Unit
Position in the swivel range	Relative position of the bar code in the swivel range. The position is normalized to the zero position (middle position). Specified in 1/10 degrees.	0 … 1	SIGNED16	-200 … +200	0	1/10°

Table 10.28: Input data for module 41

Input data length

2 bytes

Output data

None

10.10 Data Processing

10.10.1 Module 50 – Characteristics filter

PROFINET-IO module identifier

Module-ID 1050

Submodule-ID 1

Description

Configuration of the characteristics filter.
This filter can be used to set how bar codes with identical content are handled and what criteria are to be taken into account in determining the likeness.

Parameter

Parameter	Description	Addr.	Data type	Value range	Default	Unit
Handling of identical bar code information	Determines how bar codes with the same content are to be managed	0	UNSIGNED8	0: All bar codes are stored and output. 1: Only non-identical bar code contents are output.	1	-
Comparison parameter - code type	If this criterion has been activated, the bar code type is used to determine whether the bar codes are identical.	1.0	Bit	0: deactivated 1: activated	1	-
Comparison parameter - bar code content	If this criterion has been activated, the bar code content is used to determine whether the bar codes are identical.	1.1	Bit	0: deactivated 1: activated	1	-
Comparison parameter - bar code direction	If this criterion has been activated, the bar code direction is used to determine whether the bar codes are identical.	1.2	Bit	0: deactivated 1: activated	1	-
Comparison parameter - scan position	If this parameter is not equal to 0, the bar code position in the scanning beam is used to determine whether identical bar codes have already been decoded. In this case, a +/- bandwidth in degrees must be specified, within which the same bar code is permitted to be in the scanning beam.	2 … 3	UNSIGNED16	0 … 450	0	1/10 degree

Table 10.29: Parameters for module 50

Parameter	Description	Addr.	Data type	Value range	Default	Unit
Comparison parameter - oscillating mirror position	If this parameter is not equal to 0, the bar code position in the swivel range of the oscillating mirror is used to determine whether identical bar codes have already been decoded. A +/- bandwidth in degrees must then be specified, within which the same bar code is permitted to be in the oscillating mirror swivel range.	4 … 5	UNSIGNED16	0 … 200	0	1/10 degree
Comparison parameter - scanning time info	If this parameter is not equal to 0, the decoding time (time at which the bar code was decoded) is used to determine whether identical bar codes have already been detected. Here, a difference time specified in milliseconds ensures that identical bar codes may only occur within this time.	6 … 7	UNSIGNED16	0 … 65535	0	ms

Table 10.29: Parameters for module 50 (cont.)

Parameter length

8 byte

Input data

None

Output data

None

All comparison criteria are AND linked; this means all active comparisons must be fulfilled before the just-decoded bar code can be identified as already decoded and then deleted.

10.10.2 Module 51 – Data filtering

PROFINET-IO module identifier

Module-ID 1051

Submodule-ID 1

Description

Configuration of the data filter.

Parameter

Parameter	Description	Addr.	Data type	Value range	Default	Unit
Bar code filter string 1	Filter expression 1	0	STRING 30 characters null terminated	1 … 30 bytes of ASCII characters	*	-
Bar code filter string 2	Filter expression 2	30	STRING 30 characters null terminated	1 … 30 bytes of ASCII characters	\00	-

Table 10.30: Parameters for module 51

Parameter length

60 byte

Input data

None

Output data

None

Filter string

The filter string is used to define passthrough filters for bar codes.

An arbitrary number of '?' are permitted as placeholders for an arbitrary character at exactly this position. Also permitted are '*' as placeholders for a character sequence of arbitrary length, and an 'x' if the character at the respective position is to be deleted.

Notice!

ASCII characters that cannot be displayed (<0x20h) must not be used.

10.11 Identifier

The following modules can be used to specify the segmentation process to be used when extracting identifiers from the bar code data.

When a module is configured, the associated segmentation process is activated. If none of the modules is configured, no segmentation takes place.

Therefore, the modules can only be used one at a time and not simultaneously.

Notice!

When using one of the following modules, multiple results may occur within a reading gate. If there are multiple results, acknowledge mode must be used (cf. "Module 10 – Activations" on page 141, "Mode" parameter and the additional notices); data may otherwise be lost!

10.11.1 Module 52 – Segmentation according to the EAN process

PROFINET-IO module identifier

Module-ID 1052

Submodule-ID 1

Description

The module activates the segmentation according to the EAN process. The parameters specify the identifiers to searched for and the output mode.

Parameter

Parameter	Description	Addr.	Data type	Value range	Default	Unit
Identifier list						
Identifier 1	The identifier string is used for the identifier list and the filtering according to the segmentation.	0	STRING 5 characters null terminated	1 … 5 bytes of ASCII characters	'*'	-
Identifier 2	See identifier 1.	5	STRING 5 characters null terminated	1 … 5 bytes of ASCII characters	\0	-
Identifier 3	See identifier 1.	10	STRING 5 characters null terminated	1 … 5 bytes of ASCII characters	\0	-
Identifier 4	See identifier 1.	15	STRING 5 characters null terminated	1 … 5 bytes of ASCII characters	\0	-
Identifier 5	See identifier 1.	20	STRING 5 characters null terminated	1 … 5 bytes of ASCII characters	\0	-

Table 10.31: Parameters for module 52

Parameter	Description	Addr.	Data type	Value range	Default	Unit
Identifier output						
Output with identifier	If this switch is not set, the output of the identifiers is suppressed. In this case, only the data values belonging to the identifiers are displayed.	25.0	Bit	0: Output of the identifiers is suppressed. 1: Identifiers are output.	1	-
Output delimiter	This delimiter, if not equal to 0, is inserted between the identifier and the associated data value in the output.	26	UNSIGNED8	0 … 127	0	-

Table 10.31: Parameters for module 52 (cont.)

Parameter length

27 byte

Input data

None

Output data

None

Identifier string n (n = 1 … 5)

The identifier string defines both the identifier list for the segmentation and the passthrough filter for the subsequent filtering.

The string may contain wildcards. That is, an arbitrary number of '?' are permitted as placeholders for an arbitrary character at exactly that position.

Also permitted are '*' as placeholders for a character sequence of arbitrary length, and an 'x' if the character at the respective position is to be deleted. There are a total of 5 identifier strings.

An identifier with less than 5 characters must be null terminated. However, if the identifier string consists of exactly 5 characters, it does not have to be null terminated.

Notice!

ASCII characters that cannot be displayed (<0x20h) must not be used in the identifier strings.

10.11.2 Module 53 – Segmentation via fixed positions

PROFINET-IO module identifier

Module-ID 1053

Submodule-ID 1

Description

The module activates the segmentation via fixed positions. The parameters specify the identifiers to be searched for, the output mode, and the positions.

Parameter

Parameter	Description	Addr.	Data type	Value range	Default	Unit
Identifier list						
Identifier 1	The identifier string is used for the identifier list and the filtering according to the segmentation.	0	STRING 5 characters null terminated	1 … 5 bytes of ASCII characters	'*'	-
Identifier 2	See identifier 1.	5	STRING 5 characters null terminated	1 … 5 bytes of ASCII characters	\0	-
Identifier 3	See identifier 1.	10	STRING 5 characters null terminated	1 … 5 bytes of ASCII characters	\0	-
Identifier 4	See identifier 1.	15	STRING 5 characters null terminated	1 … 5 bytes of ASCII characters	\0	-
Identifier 5	See identifier 1.	20	STRING 5 characters null terminated	1 … 5 bytes of ASCII characters	\0	-
Identifier output						
Output with identifier	If this switch is not set, the output of the identifiers is suppressed. In this case, only the data values belonging to the identifiers are displayed.	25.0	Bit	0: Output of the identifiers is suppressed. 1: Identifiers are output.	1	-
Output delimiter	This delimiter, if not equal to 0, is inserted between the identifier and the associated data value in the output.	26	UNSIGNED8	0 … 127	0	-
Fixed positions						
Start position of the 1st identifier	Specifies the position of the first character of the first identifier in the data string of the bar code. The first character in the bar code has position 1. If the parameter is = 0, it is deactivated.	27	UNSIGNED8	0 … 127	0	-
Start position of the 1st data value	Specifies the position of the first character of the first data value in the data string of the bar code. The first character in the bar code has position 1. If the parameter is = 0, it is deactivated.	28	UNSIGNED8	0 … 127	0	-
Start position of the 2nd identifier	Specifies the position of the first character of the second identifier in the data string of the bar code. The first character in the bar code has position 1. If the parameter is = 0, it is deactivated.	29	UNSIGNED8	0 … 127	0	-

Table 10.32: Parameters for module 53

Parameter	Description	Addr.	Data type	Value range	Default	Unit
Start position of the 2nd data value	Specifies the position of the first character of the second data value in the data string of the bar code. The first character in the bar code has position 1. If the parameter is = 0, it is deactivated.	30	UNSIGNED8	0 … 127	0	-
Start position of the 3rd identifier	Specifies the position of the first character of the third identifier in the data string of the bar code. The first character in the bar code has position 1. If the parameter is = 0, it is deactivated.	31	UNSIGNED8	0 … 127	0	-
Start position of the 3rd data value	Specifies the position of the first character of the third data value in the data string of the bar code. The first character in the bar code has position 1. If the parameter is = 0, it is deactivated.	32	UNSIGNED8	0 … 127	0	-
Start position of the 4th identifier	Specifies the position of the first character of the fourth identifier in the data string of the bar code. The first character in the bar code has position 1. If the parameter is = 0, it is deactivated.	33	UNSIGNED8	0 … 127	0	-
Start position of the 4th data value	Specifies the position of the first character of the fourth data value in the data string of the bar code. The first character in the bar code has position 1. If the parameter is = 0, it is deactivated.	34	UNSIGNED8	0 … 127	0	-
Start position of the 5th identifier	Specifies the position of the first character of the fifth identifier in the data string of the bar code. The first character in the bar code has position 1. If the parameter is = 0, it is deactivated.	35	UNSIGNED8	0 … 127	0	-
Start position of the 5th data value	Specifies the position of the first character of the fifth data value in the data string of the bar code. The first character in the bar code has position 1. If the parameter is = 0, it is deactivated.	36	UNSIGNED8	0 … 127	0	-

Table 10.32: Parameters for module 53 (cont.)

Parameter length

37 byte

Input data

None

Output data

None

Identifier string n (n = 1 … 5)

The identifier string defines both the identifier list for the segmentation and the passthrough filter for the subsequent filtering.

The string may contain wildcards. That is, an arbitrary number of '?' are permitted as placeholders for an arbitrary character at exactly that position.

Also permitted are '*' as placeholders for a character sequence of arbitrary length, and an 'x' if the character at the respective position is to be deleted. There are a total of 5 identifier strings.

An identifier with less than 5 characters must be null terminated. However, if the identifier string consists of exactly 5 characters, it does not have to be null terminated.

Notice!

ASCII characters that cannot be displayed (<0x20h) must not be used in the identifier strings.

10.11.3 Module 54 – Segmentation according to identifier and separator

PROFINET-IO module identifier

Module-ID 1054

Submodule-ID 1

Description

This module activates the segmentation according to identifier and separator. The parameters specify the identifiers to be searched for, the output mode, and the parameters for the identifier/separator algorithm.

Parameter

Parameter	Description	Addr.	Data type	Value range	Default	Unit
Identifier list						
Identifier 1	The identifier string is used for the identifier list and the filtering according to the segmentation.	0	STRING 5 characters null terminated	1 … 5 bytes of ASCII characters	'*'	-
Identifier 2	See identifier 1.	5	STRING 5 characters null terminated	1 … 5 bytes of ASCII characters	\0	-
Identifier 3	See identifier 1.	10	STRING 5 characters null terminated	1 … 5 bytes of ASCII characters	\0	-
Identifier 4	See identifier 1.	15	STRING 5 characters null terminated	1 … 5 bytes of ASCII characters	\0	-
Identifier 5	See identifier 1.	20	STRING 5 characters null terminated	1 … 5 bytes of ASCII characters	\0	-
Identifier output						
Output with identifier	If this switch is not set, the output of the identifiers is suppressed. In this case, only the data values belonging to the identifiers are displayed.	25.0	Bit	0: Output of the identifiers is suppressed. 1: Identifiers are output.	1	-
Output delimiter	This delimiter, if not equal to 0, is inserted between the identifier and the associated data value in the output.	26	UNSIGNED8	0 … 127	0	-
Segmentation acc. to identifier and separator						
Identifier length	Fixed length of all identifiers in the segmentation process. After this length, the text of the identifier ends and the associated data value starts. The end of the data value is determined by the separator.	27	UNSIGNED8	0 … 255	0	-
Delimiter in the identifier/separator algorithm	The separator terminates the data value that follows its identifier directly after the identifier length. After the separator, the next identifier starts.	28	UNSIGNED8	0 … 127	0	-

Table 10.33: Parameters for module 54

Parameter length

29 byte

Input data

None

Output data

None

Identifier string n (n = 1 … 5)

The identifier string defines both the identifier list for the segmentation and the passthrough filter for the subsequent filtering.

The string may contain wildcards. That is, an arbitrary number of '?' are permitted as placeholders for an arbitrary character at exactly that position.

Also permitted are '*' as placeholders for a character sequence of arbitrary length, and an 'x' if the character at the respective position is to be deleted. There are a total of 5 identifier strings.

An identifier with less than 5 characters must be null terminated. However, if the identifier string consists of exactly 5 characters, it does not have to be null terminated.

Notice!

ASCII characters that cannot be displayed (<0x20h) must not be used in the identifier strings.

10.11.4 Module 55 – String handling parameters

PROFINET-IO module identifier

Module-ID 1055

Submodule-ID 1

Description

This module is used to configure placeholder characters for the bar code segmentation, filtering, termination, and reference code processing.

Parameter

Parameter	Description	Addr.	Data type	Value range	Default	Unit
Wildcard character	This parameter is similar to the "don't care character" parameter. The difference between this and the "don't care character" is that all subsequent characters, and not only one character at a certain position, are disregarded until a character pattern is found in the string that follows the wildcard character pattern. This character has the same behavior as the wildcard character for the DIR command in the command line interpreter under Windows.	0	UNSIGNED8	32 … 126	'*'	-
Don't care character	Placeholder character. Characters at the position of the placeholder character are ignored in a comparison. This permits certain areas to be masked.	1	UNSIGNED8	32 … 126	'?'	-
Delete character	Delete character for bar code and identifier filtering (characters at the position of the delete character are deleted in a comparison. This permits certain areas to be deleted).	2	UNSIGNED8	32 … 126	'x'	-

Table 10.34: Parameters for module 55

Parameter length

3 byte

Input data

None

Output data

None

10.12 Device Functions

10.12.1 Module 60 – Device status

PROFINET-IO module identifier

Module-ID 1060

Submodule-ID 1

Description

The module contains the display of the device status as well as control bits for triggering a reset or putting the device into standby mode.

Parameter

None

Input data

Input data	Description	Addr.	Data type	Value range	Init value	Unit
Device status	This byte represents the device status	0	UNSIGNED8	0: Device is ready 1: Initialization 10: Standby 11: Service 12: Diagnosis 13: Parameter enabled 15: Device is ready 0x80: Error 0x81: Warning	0	-

Table 10.35: Input data for module 60

Input data length

1 byte

Output data

Output data	Description	Addr.	Data type	Value range	Init value	Unit
System reset	The control bit triggers a system reset if the level changes from 0 to 1	0.6	Bit	0: Run 0 -> 1: Reset	0	-
Standby	Activates the standby function	0.7	Bit	0: Standby off 1: Standby on	0	-

Table 10.36: Output data for module 60

Notice!

Analogous to command H, activation of the system reset bit triggers a restart of all electronics, incl. a restart of the PROFINET-IO stack. I.e. the device restarts.

Output data length

1 byte

Notice!

When resetting the data (see Module 10 – Activations), the input data of this module is not deleted.

10.12.2 Module 61 – Laser control

PROFINET-IO module identifier

Module-ID 1061

Submodule-ID 1

Description

This module defines the switch-on and switch-off position of the laser.

Parameter

Parameter	Description	Addr.	Data type	Value range	Default	Unit
Laser start position	This parameter defines the switch-on position of the laser in 1/10° increments within the visible range of the laser. The center of the reading field corresponds to the 0° position.	0 … 1	UNSIGNED16	-450 … +450	-450	1/10°
Laser stop position	This parameter defines the switch-off position of the laser in 1/10° increments within the visible range of the laser.	2 … 3	UNSIGNED16	-450 … +450	+450	1/10°

Table 10.37: Parameters for module 61

Parameter length

4 byte

Input data

None

Output data

None

10.12.3 Module 62 – Display

PROFINET-IO module identifier

Module-ID 1062

Submodule-ID 1

Description

Set in this module are general parameters and parameters related to operation and the display.

Parameter

Parameter	Description	Addr.	Data type	Value range	Default	Unit
Language selection	Language selection for the display A language which was selected via the display is overwritten by this parameter.	0.0 … 0.2	Bit	1: English 2: German 3: Italian 4: French 5: Spanish	1	-
Display illumination	Off after 10 min., or permanently on.	0.3	Bit	0: Off after 10 min. 1: Permanently on	0	-
Display contrast	Contrast setting of the display. The contrast changes under extreme ambient temperature and can be adjusted with this parameter.	0.4 … 0.5	Bit	0: Light 1: Medium 2: Strong	1	-
Password protection	Password protection on/off.	0.7	Bit	0: OFF 1: ON	0	-
Password	Password specification. Password is only active if password protection is on.	1 … 2	UNSIGNED16	0000 … 9999	0000	-

Table 10.38: Parameters for module 62

Parameter length

3 byte

Input data

None

Output data

None

Notice!

This module overwrites the local display settings. Following activation of this module, the language selection, the setting for password protection and the specified password set in this module take effect.

10.12.4 Module 63 – Alignment

PROFINET-IO module identifier

Module-ID 1063

Submodule-ID 1

Description

The module defines input and output data for the alignment mode of the BCL 504*i*. The alignment mode is used for easy alignment of the BCL 504*i* with the bar code. Using the transmitted decoding quality as a percentage, the optimum alignment can be easily selected. This module should not be used in connection with module 81 (AutoReflAct) as this may cause malfunctions.

Parameter

None

Input data

Input data	Description	Addr.	Data type	Value range	Init value	Unit
Decoding quality	Transmits the current decoding quality of the bar code located in the scanning beam	0	Byte	0 … 100	0	Percent-age

Table 10.39: Input data for module 63

Input data length

1 byte

Output data

Output data	Description	Addr.	Data type	Value range	Init value	Unit
Alignment mode	Signal activates and deactivates the alignment mode for optimum alignment of the BCL 504*i* with the bar code	0.0	Bit	0 -> 1: On 1 -> 0: Off	0	-

Table 10.40: Output data for module 63

Output data length

1 byte

10.12.5 Module 64 – Oscillating mirror

PROFINET-IO module identifier

Module-ID 1064

Submodule-ID 1

Description

Module for supporting the oscillating mirror.

Parameter

Parameter	Description	Addr.	Data type	Value range	Default	Unit
Oscillation mode	This parameter defines the mode in which the oscillating mirror operates.	0.0 … 0.1	UNSIGNED8	0: Single oscillation 1: Double oscillation 2: Continuous oscillation 3: Continuous oscillation, oscillating mirror moves to the start position at the end of the reading gate.	2	-
Decoding direction	Setting of oscillating direction in which the bar codes to be read must be decoded.	0.4 … 0.5	BitArea	0: In both directions 1: During forward oscillation 2: During backward oscillation	0	-
Start position	Start position (opening angle) relative to the zero position of the swivel range.	1 … 2	SIGNED16	-200 … +200	200	1/10°
Stop position	Stop position (opening angle) relative to the zero position of the swivel range.	3 … 4	SIGNED16	-200 … +200	-200	1/10°
Oscillation frequency	Common value for forward and backward motion	5	UNSIGNED8	15 … 116	48	°/s

Table 10.41: Parameters for module 64

Parameter length

6 byte

Input data

None

Output data

None

10.12.6 Module 65 – Deflection mirrors

PROFINET-IO module identifier

Module-ID 1065

Submodule-ID 1

Description

Module for supporting the deflection mirror.

Parameter

Parameter	Description	Addr.	Data type	Value range	Default	Unit
Deflection angle	Lateral beam exit in degrees relative to the zero position	0 …1	SIGNED16	-100 … +100	0	1/10°

Table 10.42: Parameters for module 65

Parameter length

2 bytes

Input data

None

Output data

None

10.13 Switching inputs/ outputs SWIO 1 … 4

These modules define the mode of operation of the 4 digital switching inputs and outputs (I/Os). They are separated into individual modules for configuring the individual I/Os and a shared module for signaling the status and controlling all I/Os.

10.13.1 Parameters for operating as an output

Start-up delay

With this setting, the output pulse can be delayed by the specified time (in ms).

Switch-on time

Defines the switch-on time period for the switching input. Any activated switch-off function then no longer has any function.

A value of 0 causes the output to be set statically; this means that the selected input function(s) activate the output, and the selected switch-off function(s) deactivate it again.

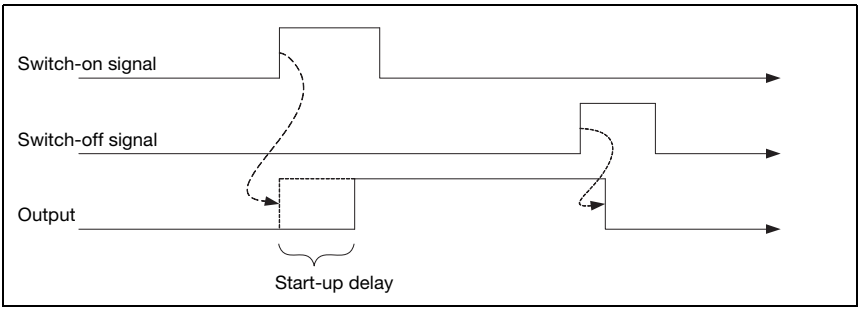

Figure 10.4: Example 1: Start-up delay > 0 and switch-on time = 0

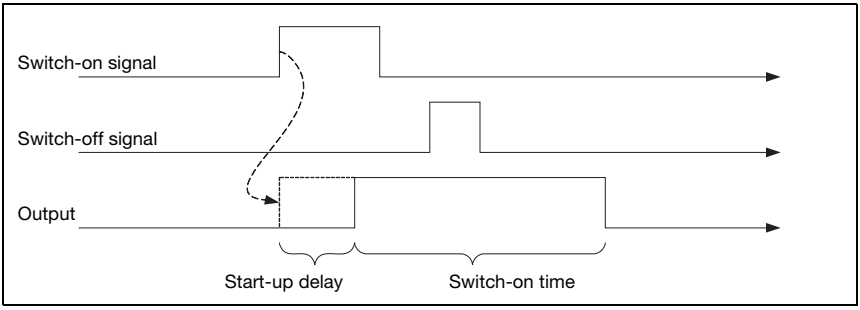

Figure 10.5: Example 2: Start-up delay > 0 and switch-on time > 0

In example 2, the activation duration of the output is only dependent on the selected switch-on time; the switch-off signal has no effect.

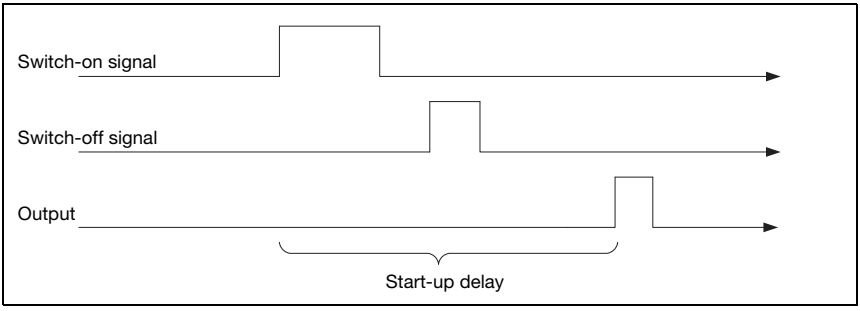

Figure 10.6: Example 3: Start-up delay >0 Switch-off signal prior to lapsing of the start-up delay

If the output is again deactivated via the switch-off signal before the start-up delay lapses, only a brief pulse appears at the output following the start-up delay.

Comparison functionality

If, for example, the switching output is to be activated after four invalid read results, the **comparative value** is set to **4** and the **switch-on function** is configured to "**invalid read result**".

The **comparison mode** parameter can be used to define whether the switching output is activated only once in the case that the event counter and comparative value fulfill the "**parity**" condition, or if it is activated multiple times, on each successive event after the "**parity**" condition is met.

The event counter can always be reset with the I/O data in the **I/O status and control** module; furthermore, the **reset mode** parameter enables automatic resetting upon reaching the **comparative value**. Automatic resetting upon reaching the **comparative value** always results in the switching output being switched once independent of the **comparison mode** parameter.

The standard switch-off function at **reading gate start** is rather unsuited for this module since it causes the event counter to be reset on each reading gate start. Suitable as switch-off function for this example is the **valid read result** function; otherwise, all switch-off functions are deactivated.

10.13.2 Parameters for operating as an input

Debounce time

Parameter for setting the software debounce time for the switching input. The definition of a debounce time extends the signal transition time accordingly.

If the value of this parameter = 0, no debouncing takes place; otherwise, the configured value represents the duration in milliseconds for which the input signal must be present and stable.

Start-up delay td_on

If the value of this parameter = 0, no start-up delay occurs for the activation of the input function; otherwise, the configured value represents the time in milliseconds by which the input signal is delayed.

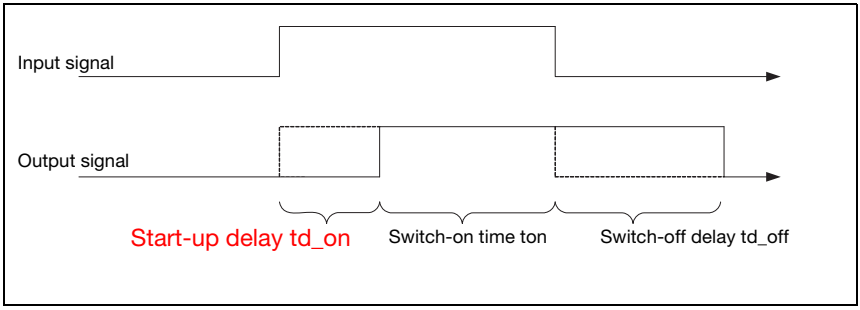

Figure 10.7: Start-up delay in input mode

Switch-on time ton

This parameter specifies the min. activation duration for the selected input function in ms.

The actual activation duration is calculated from the switch-on time as well as the switch-off delay.

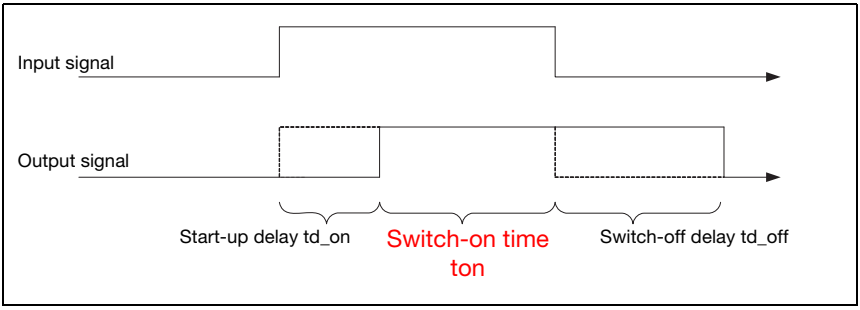

Figure 10.8: Switch-on time in input mode

Switch-off delay td_off

This parameter specifies the duration of the switch-off delay in ms.

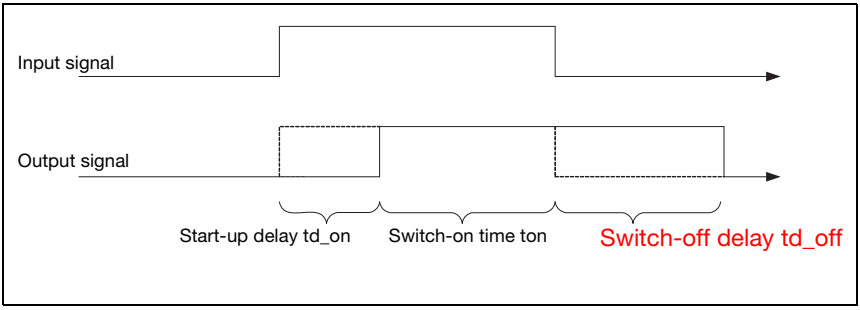

Figure 10.9: Switch-off delay in input mode

10.13.3 Switch-on and switch-off functions for operation as an output

The following options are available for switch-on and switch-off functions in the "output" operating mode:

Name	Value	Comments
No function	0	No functionality
Reading gate start	1	
Reading gate end	2	
Positive reference code comparison 1	3	
Negative reference code comparison 1	4	
Valid read result	5	
Invalid read result	6	
Device ready	7	The device is in a ready state
Device not ready	8	The device is not yet ready (motor and laser are being activated)
Data transmission active	9	
Data transmission not active	10	
AutoControl good quality	13	
AutoControl bad quality	14	
Reflector detected	15	
Reflector not detected	16	
External event, pos. edge	17	In the PROFINET case, the external event is generated with the aid of module 74 – "I/O status and control". See "Module 74 – SWIO status and control" on page 189.
External event, neg. edge	18	See above
Device active	19	Decoding is currently being performed.
Device in standby mode	20	Motor and laser inactive
No device error	21	An error was detected.
Device error	22	Device is in an error state
Positive reference code comparison 2	23	
Negative reference code comparison 2	24	

Table 10.43: Switch-on/switch-off functions

10.13.4 Input functions for operation as an input

Name	Value	Comments
No function	0	No functionality
Activation of the reading gate	1	
Reading gate deactivation only	2	
Reading gate activation only	3	
Reference bar code teach-in	4	
Start/stop autoconfiguration mode	5	

Table 10.44: Input functions

10.13.5 Module 70 – Switching input/output SWIO1

PROFINET-IO module identifier

Module-ID 1070

Submodule-ID 1

Parameter

Parameter	Description	Addr.	Data type	Value range	Default	Unit
Function	This parameter defines whether I/O 1 functions as an input or as an output.	0.0	Bit	0: Input 1: Output	0	-
Mode of operation for configuration as an output						
DC bias level	The parameter defines the DC bias level of the switching output and, thus, simultaneously whether the output is low-active (0) or high-active (1).	0.1	Bit	0: LOW (0V) 1: HIGH (+Ub)	0	-
Reserved	Free	0.2 … 0.7				
Start-up delay	With this parameter, the output pulse may be delayed by a set time period.	1	UNSIGNED16	0 … 65535	0	ms
Switch-on time	The parameter defines the switch-on time period for the switching output. If the value is 0, the signal is static.	3	UNSIGNED16	0 … 1300	400	ms
Switch-on function 1	This parameter specifies an event which can set the switching output.	5	UNSIGNED8	cf. "Switch-on/ switch-off functions" on page 180	0	-
Switch-on function 2	This parameter specifies an event which can set the switching output. Switch-on function 1 and switch-on function 2 are OR linked.	6	UNSIGNED8	cf. "Switch-on/ switch-off functions" on page 180	0	-
Switch-off function 1	This parameter specifies an event which can reset the switching output.	7	UNSIGNED8	cf. "Switch-on/ switch-off functions" on page 180	0	-
Switch-off function 2	This parameter specifies an event which can reset the switching output. Switch-off function 1 and switch-off function 2 are OR linked.	8	UNSIGNED8	cf. "Switch-on/ switch-off functions" on page 180	0	-
Comparative value (Event Counter)	If the number of activation events of the selected switch-on function reaches this comparative value, the switching output is activated. A deactivation event of the selected switch-off function resets the counter.	9	UNSIGNED16	0..65535	0	-
Compare mode (Event Counter)	Specifies whether the switching output switches only on parity (once) or also in the event of greater or equal to (multiple times) after the comparative value is reached.	11	UNSIGNED8	0: SWOUT switches once 1: SWOUT switches several times	0	-

Table 10.45: Parameters for module 70 – Input/Output 1

Parameter	Description	Addr.	Data type	Value range	Default	Unit
Reset mode (Event Counter)	Specifies whether the counter (Event Counter) is reset only by the reset bit and the selected switch-off function, or if the counter should be automatically reset after the comparative value is reached.	12	UNSIGNED8	0: Reset bit and switch-off funct. 1: Comparative value reached	0	-
Mode of operation for configuration as an input						
Inversion	The parameter defines the logic of the incident signal. In case of an inversion, an external HIGH level is interpreted internally as a LOW level.	13.1	Bit	0: Normal 1: Inverted	0	-
Reserved	Free	13.2 … 13.7				
Debounce time	The parameter defines a debounce time which is implemented in software.	14	UNSIGNED16	0 … 1000	5	ms
Start-up delay	The parameter influences the timing during switch-on.	16	UNSIGNED16	0 … 65535	0	ms
Minimum switch-on time	The parameter defines a minimum time period before the signal is reset.	18	UNSIGNED16	0 … 65535	0	ms
Switch-off delay	The parameter defines a time delay for the signal during switch-off.	20	UNSIGNED16	0 … 65535	0	ms
Input function	The parameter specifies the function which is to be activated or deactivated by a change of state in the signal.	22	UNSIGNED8	cf. "Input functions" on page 180	1	-

Table 10.45: Parameters for module 70 – Input/Output 1 (cont.)

Parameter length

23 byte

Input data

None

Output data

None

Remark

The DC bias level also defines whether the output is low-active (**0**) or high-active (**1**).

Switching on an I/O configured as an output means switching to the active state; switching off, on the other hand, results in switching to the inactive or idle state.

10.13.6 Module 71 – Switching input/output SWIO2

PROFINET-IO module identifier

Module-ID 1071

Submodule-ID 1

Parameter

Parameter	Description	Addr.	Data type	Value range	Default	Unit
Function	This parameter defines whether I/O 2 functions as an input or as an output.	0.0	Bit	0: Input 1: Output	1	-
Mode of operation for configuration as an output						
DC bias level	The parameter defines the DC bias level of the switching output and, thus, simultaneously whether the output is low-active (0) or high-active (1).	0.1	Bit	0: LOW (0V) 1: HIGH (+Ub)	0	-
Reserved	Free	0.2 … 0.7				
Start-up delay	With this parameter, the output pulse may be delayed by a set time period.	1	UNSIGNED16	0 … 65535	0	ms
Switch-on time	The parameter defines the switch-on time period for the switching output. If the value is 0, the signal is static.	3	UNSIGNED16	0 … 1300	400	ms
Switch-on function 1	This parameter specifies an event which can set the switching output.	5	UNSIGNED8	cf. "Switch-on/ switch-off functions" on page 180	5	-
Switch-on function 2	This parameter specifies an event which can set the switching output. Switch-on function 1 and switch-on function 2 are OR linked.	6	UNSIGNED8	cf. "Switch-on/ switch-off functions" on page 180	0	-
Switch-off function 1	This parameter specifies an event which can reset the switching output.	7	UNSIGNED8	cf. "Switch-on/ switch-off functions" on page 180	0	-
Switch-off function 2	This parameter specifies an event which can reset the switching output. Switch-off function 1 and switch-off function 2 are OR linked.	8	UNSIGNED8	cf. "Switch-on/ switch-off functions" on page 180	0	-
Comparative value (Event Counter)	If the number of activation events of the selected switch-on function reaches this comparative value, the switching output is activated. A deactivation event of the selected switch-off function resets the counter.	9	UNSIGNED16	0..65535	0	-
Compare mode (Event Counter)	Specifies whether the switching output switches only on parity (once) or also in the event of greater or equal to (multiple times) after the comparative value is reached.	11	UNSIGNED8	0: SWOUT switches once 1: SWOUT switches several times	0	-

Table 10.46: Parameters for module 71 – Input/Output 2

Parameter	Description	Addr.	Data type	Value range	Default	Unit
Reset mode (Event Counter)	Specifies whether the counter (Event Counter) is reset only by the reset bit and the selected switch-off function, or if the counter should be automatically reset after the comparative value is reached.	12	UNSIGNED8	0: Reset bit and switch-off funct. 1: Comparative value reached	0	-
Mode of operation for configuration as an input						
Inversion	The parameter defines the logic of the incident signal. In case of an inversion, an external HIGH level is interpreted internally as a LOW level.	13.1	Bit	0: Normal 1: Inverted	0	-
Reserved	Free	13.2 … 13.7				
Debounce time	The parameter defines a debounce time which is implemented in software.	14	UNSIGNED16	0 … 1000	5	ms
Start-up delay	The parameter influences the timing during switch-on.	16	UNSIGNED16	0 … 65535	0	ms
Minimum switch-on time	The parameter defines a minimum time period before the signal is reset.	18	UNSIGNED16	0 … 65535	0	ms
Switch-off delay	The parameter defines a time delay for the signal during switch-off.	20	UNSIGNED16	0 … 65535	0	ms
Input function	The parameter specifies the function which is to be activated or deactivated by a change of state in the signal.	22	UNSIGNED8	cf. "Input functions" on page 180	0	-

Table 10.46: Parameters for module 71 – Input/Output 2

Parameter length

23 byte

Input data

None

Output data

None

Remark

The DC bias level also defines whether the output is low-active (**0**) or high-active (**1**).

Switching on an I/O configured as an output means switching to the active state; switching off, on the other hand, results in switching to the inactive or idle state.

10.13.7 Module 72 – Switching input/output SWIO3

PROFINET-IO module identifier

Module-ID 1072

Submodule-ID 1

Parameter

Parameter	Description	Addr.	Data type	Value range	Default	Unit
Function	This parameter defines whether I/O 3 functions as an input or as an output.	0.0	Bit	0: Input 1: Output	0	-
Mode of operation for configuration as an output						
DC bias level	The parameter defines the DC bias level of the switching output and, thus, simultaneously whether the output is low-active (0) or high-active (1).	0.1	Bit	0: LOW (0V) 1: HIGH (+Ub)	0	-
Reserved	Free	0.2 … 0.7				
Start-up delay	With this parameter, the output pulse may be delayed by a set time period.	1	UNSIGNED16	0 … 65535	0	ms
Switch-on time	The parameter defines the switch-on time period for the switching output. If the value is 0, the signal is static.	3	UNSIGNED16	0 … 1300	400	ms
Switch-on function 1	This parameter specifies an event which can set the switching output.	5	UNSIGNED8	cf. "Switch-on/ switch-off functions" on page 180	0	-
Switch-on function 2	This parameter specifies an event which can set the switching output. Switch-on function 1 and switch-on function 2 are OR linked.	6	UNSIGNED8	cf. "Switch-on/ switch-off functions" on page 180	0	-
Switch-off function 1	This parameter specifies an event which can reset the switching output.	7	UNSIGNED8	cf. "Switch-on/ switch-off functions" on page 180	0	-
Switch-off function 2	This parameter specifies an event which can reset the switching output. Switch-off function 1 and switch-off function 2 are OR linked.	8	UNSIGNED8	cf. "Switch-on/ switch-off functions" on page 180	0	-
Comparative value (Event Counter)	If the number of activation events of the selected switch-on function reaches this comparative value, the switching output is activated. A deactivation event of the selected switch-off function resets the counter.	9	UNSIGNED16	0..65535	0	-
Compare mode (Event Counter)	Specifies whether the switching output switches only on parity (once) or also in the event of greater or equal to (multiple times) after the comparative value is reached.	11	UNSIGNED8	0: SWOUT switches once 1: SWOUT switches several times	0	-

Table 10.47: Parameters for module 72 – Input/Output 3

Parameter	Description	Addr.	Data type	Value range	Default	Unit
Reset mode (Event Counter)	Specifies whether the counter (Event Counter) is reset only by the reset bit and the selected switch-off function, or if the counter should be automatically reset after the comparative value is reached.	12	UNSIGNED8	0: Reset bit and switch-off funct. 1: Comparative value reached	0	-
Mode of operation for configuration as an input						
Inversion	The parameter defines the logic of the incident signal. In case of an inversion, an external HIGH level is interpreted internally as a LOW level.	13.1	Bit	0: Normal 1: Inverted	0	-
Reserved	Free	13.2 … 13.7				
Debounce time	The parameter defines a debounce time which is implemented in software.	14	UNSIGNED16	0 … 1000	5	ms
Start-up delay	The parameter influences the timing during switch-on.	16	UNSIGNED16	0 … 65535	0	ms
Minimum switch-on time	The parameter defines a minimum time period before the signal is reset.	18	UNSIGNED16	0 … 65535	0	ms
Switch-off delay	The parameter defines a time delay for the signal during switch-off.	20	UNSIGNED16	0 … 65535	0	ms
Input function	The parameter specifies the function which is to be activated or deactivated by a change of state in the signal.	22	UNSIGNED8	cf. "Input functions" on page 180	1	-

Table 10.47: Parameters for module 72 – Input/Output 3

Parameter length

23 byte

Input data

None

Output data

None

Remark

The DC bias level also defines whether the output is low-active (**0**) or high-active (**1**).

Switching on an I/O configured as an output means switching to the active state; switching off, on the other hand, results in switching to the inactive or idle state.

10.13.8 Module 73 – Switching input/output SWIO4

PROFINET-IO module identifier

Module-ID 1073

Submodule-ID 1

Parameter

Parameter	Description	Addr.	Data type	Value range	Default	Unit
Function	This parameter defines whether I/O 4 functions as an input or as an output.	0.0	Bit	0: Input 1: Output	1	-
Mode of operation for configuration as an output						
DC bias level	The parameter defines the DC bias level of the switching output and, thus, simultaneously whether the output is low-active (0) or high-active (1).	0.1	Bit	0: LOW (0V) 1: HIGH (+Ub)	0	-
Reserved	Free	0.2 … 0.7				
Start-up delay	With this parameter, the output pulse may be delayed by a set time period.	1	UNSIGNED16	0 … 65535	0	ms
Switch-on time	The parameter defines the switch-on time period for the switching output. If the value is 0, the signal is static.	3	UNSIGNED16	0 … 1300	400	ms
Switch-on function 1	This parameter specifies an event which can set the switching output.	5	UNSIGNED8	cf. "Switch-on/ switch-off functions" on page 180	6	-
Switch-on function 2	This parameter specifies an event which can set the switching output. Switch-on function 1 and switch-on function 2 are OR linked.	6	UNSIGNED8	cf. "Switch-on/ switch-off functions" on page 180	0	-
Switch-off function 1	This parameter specifies an event which can reset the switching output.	7	UNSIGNED8	cf. "Switch-on/ switch-off functions" on page 180	1	-
Switch-off function 2	This parameter specifies an event which can reset the switching output. Switch-off function 1 and switch-off function 2 are OR linked.	8	UNSIGNED8	cf. "Switch-on/ switch-off functions" on page 180	0	-
Comparative value (Event Counter)	If the number of activation events of the selected switch-on function reaches this comparative value, the switching output is activated. A deactivation event of the selected switch-off function resets the counter.	9	UNSIGNED16	0..65535	0	-

Table 10.48: Parameters for module 73 – Input/Output 4

Parameter	Description	Addr.	Data type	Value range	Default	Unit
Compare mode (Event Counter)	Specifies whether the switching output switches only on parity (once) or also in the event of greater or equal to (multiple times) after the comparative value is reached.	11	UNSIGNED8	0: SWOUT switches once 1: SWOUT switches several times	0	-
Reset mode (Event Counter)	Specifies whether the counter (Event Counter) is reset only by the reset bit and the selected switch-off function, or if the counter should be automatically reset after the comparative value is reached.	12	UNSIGNED8	0: Reset bit and switch-off funct. 1: Comparative value reached	0	-
Mode of operation for configuration as an input						
Inversion	The parameter defines the logic of the incident signal. In case of an inversion, an external HIGH level is interpreted internally as a LOW level.	13.1	Bit	0: Normal 1: Inverted	0	-
Reserved	Free	13.2 … 13.7				
Debounce time	The parameter defines a debounce time which is implemented in software.	14	UNSIGNED16	0 … 1000	5	ms
Start-up delay	The parameter influences the timing during switch-on.	16	UNSIGNED16	0 … 65535	0	ms
Minimum switch-on time	The parameter defines a minimum time period before the signal is reset.	18	UNSIGNED16	0 … 65535	0	ms
Switch-off delay	The parameter defines a time delay for the signal during switch-off.	20	UNSIGNED16	0 … 65535	0	ms
Input function	The parameter specifies the function which is to be activated or deactivated by a change of state in the signal.	22	UNSIGNED8	cf. "Input functions" on page 180	0	-

Table 10.48: Parameters for module 73 – Input/Output 4 (cont.)

Parameter length

23 byte

Input data

None

Output data

None

Remark:

The DC bias level also defines whether the output is low-active (**0**) or high-active (**1**).

Switching on an I/O configured as an output means switching to the active state; switching off, on the other hand, results in switching to the inactive or idle state.

10.13.9 Module 74 – SWIO status and control

PROFINET-IO module identifier

Module-ID 1074

Submodule-ID 1

Description

Module for handling switching input and switching output signals.

Parameter

None

Input data

Input data	Description	Addr.	Data type	Value range	Init value	Unit
State 1	Signal state of switching input or output 1	0.0	Bit	0,1	0	-
State 2	Signal state of switching input or output 2	0.1	Bit	0,1	0	-
State 3	Signal state of switching input or output 3	0.2	Bit	0,1	0	-
State 4	Signal state of switching input or output 4	0.3	Bit	0,1	0	-
Comparison state switching output 1 (Event Counter)	Indicates whether the event counter has exceeded the set comparative value. The bit is reset to the init. value by resetting the event counter.	1.0	Bit	0: Not exceeded 1: Exceeded	0	-
Switching output 1 Comparison state toggle bit (Event Counter)	If "SWOUT switches several times" was configured as comparison mode, this bit is toggled each time the event counter is exceeded. Indicates whether the event counter has reached the set comparative value.	1.1	Bit	0 -> 1: Event counter exceeded 1 -> 0: Event counter exceeded again	0	-
Comparison state switching output 2 (Event Counter)	Indicates whether the event counter has exceeded the set comparative value. The bit is reset to the init. value by resetting the event counter.	1.2	Bit	0: Not exceeded 1: Exceeded	0	-
Switching output 2 Comparison state toggle bit (Event Counter)	If "SWOUT switches several times" was configured as comparison mode, this bit is toggled each time the event counter is exceeded. Indicates whether the event counter has reached the set comparative value.	1.3	Bit	0 -> 1: Event counter exceeded 1 -> 0: Event counter exceeded again	0	-
Comparison state switching output 3 (Event Counter)	Indicates whether the event counter has exceeded the set comparative value. The bit is reset to the init. value by resetting the event counter.	1.4	Bit	0: Not exceeded 1: Exceeded	0	-

Table 10.49: Input data for module 74 Input/output status and control

Input data	Description	Addr.	Data type	Value range	Init value	Unit
Switching output 3 Comparison state toggle bit (Event Counter)	If "SWOUT switches several times" was configured as comparison mode, this bit is toggled each time the event counter is exceeded. Indicates whether the event counter has reached the set comparative value.	1.5	Bit	0 -> 1: Event counter exceeded 1 -> 0: Event counter exceeded again	0	-
Comparison state switching output 4 (Event Counter)	Indicates whether the event counter has exceeded the set comparative value. The bit is reset to the init. value by resetting the event counter.	1.6	Bit	0: Not exceeded 1: Exceeded	0	-
Switching output 4 Comparison state toggle bit (Event Counter)	If "SWOUT switches several times" was configured as comparison mode, this bit is toggled each time the event counter is exceeded. Indicates whether the event counter has reached the set comparative value.	1.7	Bit	0 -> 1: Event counter exceeded 1 -> 0: Event counter exceeded again	0	-

Table 10.49: Input data for module 74 Input/output status and control (cont.)

Input data length

2 bytes

Output data

Output data	Description	Addr.	Data type	Value range	Init value	Unit
Switching output 1	Sets the state of switching output 1	0.0	Bit	0: Switching output 0 1: Switching output 1	0	-
Switching output 2	Sets the state of switching output 2	0.1	Bit	0: Switching output 0 1: Switching output 1	0	-
Switching output 3	Sets the state of switching output 3	0.2	Bit	0: Switching output 0 1: Switching output 1	0	-
Switching output 4	Sets the state of switching output 4	0.3	Bit	0: Switching output 0 1: Switching output 1	0	-
Reset Event Counter Switching output 1	Sets the event counter of the activation function [AF] for switching output 1 back to zero.	0.4	Bit	0 -> 1: Perform reset 1 -> 0: No function	0	-
Reset Event Counter Switching output 2	Sets the event counter of the activation function [AF] for switching output 2 back to zero.	0.5	Bit	0 -> 1: Perform reset 1 -> 0: No function	0	-
Reset Event Counter Switching output 3	Sets the event counter of the activation function [AF] for switching output 3 back to zero.	0.6	Bit	0 -> 1: Perform reset 1 -> 0: No function	0	-
Reset Event Counter Switching output 4	Sets the event counter of the activation function [AF] for switching output 4 back to zero.	0.7	Bit	0 -> 1: Perform reset 1 -> 0: No function	0	-
	Reserved	1	Byte			

Table 10.50: Output data for module 74 Input/output status and control

Output data length

1 byte

10.14 Data output

10.14.1 Module 80 – Sorting

PROFINET-IO module identifier

Module-ID 1080

Submodule-ID 1

Description

Module to support the sorting of the output data.

Parameter

Parameter	Description	Addr.	Data type	Value range	Default	Unit
Sort criterion 1	Specifies the criterion according to which sorting takes place.	0.0 … 0.6	BitArea	0: No sorting 1: Sorting according to scan number 2: Sorting according to position in the scanning beam 3: Sorting according to the oscillating mirror position 4: Sorting according to the decoding quality 5: Sorting according to the bar code length 6: Sorting according to the code type number 7: Sorting according to the decoding direction 8: Sorting according to the bar code content 9: Sorting according to time 10: Sorting according to scanning duration 11: Sorting according to the code list (in which the enabled bar codes are listed) 12: Sorting according to the identifier list	0	-
Sort direction 1	Specifies the sorting direction.	0.7	Bit	0: In ascending order 1: In descending order	0	-
Sort criterion 2	Specifies the criterion according to which sorting takes place.	1.0 … 1.6	BitArea	See sorting criterion 1	0	-
Sort direction 2	Specifies the sorting direction.	1.7	Bit	See sorting direction 1	0	-
Sort criterion 3	Specifies the criterion according to which sorting takes place.	2.0 … 2.6	BitArea	See sorting criterion 1	0	-
Sort direction 3	Specifies the sorting direction.	2.7	Bit	See sorting direction 1	0	-

Table 10.51: Parameters for module 80

Parameter length

3 byte

Input data

None

Output data

None

10.15 Reference code comparison

The following modules can be used to support reference code comparison.

The reference code function compares the currently decoded read results with one or more stored comparison patterns. The function is split into two comparison units which can be configured independently of each other.

10.15.1 Module 81 – Reference code comparator 1

PROFINET-IO module identifier

Module-ID 1081

Submodule-ID 1

Description

The module defines the mode of operation of reference code comparator 1.

Parameter

Parameter	Description	Addr.	Data type	Value range	Default	Unit
Output function after reference bar code comparison	This parameter specifies the associated output linkage after a reference bar code comparison.	0	UNSIGNED8	0: No function 1: Comparison function 1 2: Comparison function 2 3: Comparison function 1 AND 2 4: Comparison function 1 OR 2	1	-
Linking logic for reference code output signal	This parameter specifies the linking logic for the reference code output signal.	1	UNSIGNED8	0: Length and type and ASCII 1: Length and (type or ASCII) 2: (Length or type) and ASCII 3: Length or type or ASCII	0	-
Output for reference code comparison	This parameter specifies whether a bar code length comparison should be carried out.	2	UNSIGNED8	0: Length ignored 1: Comparison o.k. if length not identical 2: Comparison o.k. if length identical.	2	-
Bar code type comparison	This parameter specifies whether a bar code type comparison should be carried out.	3	UNSIGNED8	0: Type ignored 1: Comparison o.k. if types not identical 2: Comparison o.k. if types identical.	2	-
Reference code ASCII comparison	This parameter specifies how the ASCII comparison should be carried out.	4	UNSIGNED8	0: No comparison 1: Bar code not identical to RC 2: Bar code identical to RC 3: Bar code greater than RC 4: Bar code greater than or equal to RC 5: Bar code less than RC 6: Bar code less than or equal to RC 7: RC1 less than or equal to bar code less than or equal to RC2 8: Bar code less than RC1 or bar code greater than RC2	2	-

Table 10.52: Parameters for module 81 – Reference code comparison

Parameter	Description	Addr.	Data type	Value range	Default	Unit
Reference code comparison mode	This parameter determines how and which reference bar codes (RC) are to be used for the bar code comparison.	5	UNSIGNED8	0: Only the first RC is used for the comparison. 1: Only the second RC is used for the comparison. 2: RC 1 and 2 are used for the comparison. Both conditions for RC 1 and 2 must be satisfied for a positive comparison. 3: RC 1 and 2 are used for the comparison. One of the two conditions for reference bar codes 1 and 2 must be satisfied.	0	-
Bar code comparison mode	This parameter specifies which decoded bar codes are to be used for the reference bar code comparison.	6	UNSIGNED8	0: Only the first bar code is used for the comparison. 1: Only the second bar code is used for the comparison. 2: All bar codes are used for the comparison. All comparisons must be successful. 3: All bar codes are used for the comparison. One comparison must be successful.	3	-
Reference code completeness comparison	If this parameter is set, the basic condition for a positive reference code comparison is that all mandatory bar codes that are to be read within a reading gate were actually read. If this condition is not satisfied, no positive reference code comparison is achieved.	7.0	Bit	0: Completeness comparison switched off. 1: Completeness comparison switched on.	0	-

Table 10.52: Parameters for module 81 – Reference code comparison (cont.)

Parameter length

8 byte

Input data

None

Output data

None

10.15.2 Module 82 – Reference code comparator 2

PROFINET-IO module identifier

Module-ID 1082

Submodule-ID 1

Description

The module defines the mode of operation of reference code comparator 2.

Parameter

Parameter	Description	Addr.	Data type	Value range	Default	Unit
Output function after reference bar code comparison	This parameter specifies the associated output linkage after a reference bar code comparison.	0	UNSIGNED8	0: No function 1: Comparison function 1 2: Comparison function 2 3: Comparison function 1 AND 2 4: Comparison function 1 OR 2	1	-
Linking logic for reference code output signal	This parameter specifies the linking logic for the reference code output signal.	1	UNSIGNED8	0: Length and type and ASCII 1: Length and (type or ASCII) 2: (Length or type) and ASCII 3: Length or type or ASCII	0	-
Output for reference code comparison	This parameter specifies whether a bar code length comparison should be carried out.	2	UNSIGNED8	0: Length ignored 1: Comparison o.k. if length not identical 2: Comparison o.k. if length identical.	2	-
Bar code type comparison	This parameter specifies whether a bar code type comparison should be carried out.	3	UNSIGNED8	0: Type ignored 1: Comparison o.k. if types not identical 2: Comparison o.k. if types identical.	2	-
Reference code ASCII comparison	This parameter specifies how the ASCII comparison should be carried out.	4	UNSIGNED8	0: No comparison 1: Bar code not identical to RC 2: Bar code identical to RC 3: Bar code greater than RC 4: Bar code greater than or equal to RC 5: Bar code less than RC 6: Bar code less than or equal to RC 7: RC1 less than or equal to bar code less than or equal to RC2 8: Bar code less than RC1 or bar code greater than RC2	2	-
Reference code comparison mode	This parameter determines how and which reference bar codes (RC) are to be used for the bar code comparison.	5	UNSIGNED8	0: Only the first RC is used for the comparison. 1: Only the second RC is used for the comparison. 2: RC 1 and 2 are used for the comparison. Both conditions for RC 1 and 2 must be satisfied for a positive comparison. 3: RC 1 and 2 are used for the comparison. One of the two conditions for reference bar codes 1 and 2 must be satisfied.	0	-

Table 10.53: Parameters for module 82 – Reference code comparison

Parameter	Description	Addr.	Data type	Value range	Default	Unit
Bar code comparison mode	This parameter specifies which decoded bar codes are to be used for the reference bar code comparison.	6	UNSIGNED8	0: Only the first bar code is used for the comparison. 1: Only the second bar code is used for the comparison. 2: All bar codes are used for the comparison. All comparisons must be successful. 3: All bar codes are used for the comparison. One comparison must be successful.	3	-
Reference code completeness comparison	If this parameter is set, the basic condition for a positive reference code comparison is that all mandatory bar codes that are to be read within a reading gate were actually read. If this condition is not satisfied, no positive reference code comparison is achieved.	7.0	Bit	0: Completeness comparison switched off. 1: Completeness comparison switched on.	0	-

Table 10.53: Parameters for module 82 – Reference code comparison (cont.)

Parameter length

8 byte

Input data

None

Output data

None

10.15.3 Module 83 – Reference code comparison pattern 1

PROFINET-IO module identifier

Module-ID 1083

Submodule-ID 1

Description

This module can be used to define the 1st comparison pattern

Parameter

Parameter	Description	Addr.	Data type	Value range	Default	Unit
Code type comparison pattern 1	Specifies the type of the reference bar code.	0	UNSIGNED8	0: No code 1: 2/5 Interleaved 2: Code39 3: Code32 6: UPC, UPCE 7: EAN8, EAN13 8: Code128 10: EAN Addendum 11: Codabar 12: Code93 13: GS1 DataBar Omnidirectional 14: GS1 DataBar Limited 15: GS1 DataBar Omnidirectional Expanded	0	-
Comparison pattern 1	Parameter string describing the content of the reference bar code. Note: You can also use the two placeholder characters that are stored in the "Wildcard character" and "Don't care character" parameters. If the string is empty, no comparison takes place. If the most recently stored character is the wildcard character, the comparison is only carried out up to the character before this wildcard character. In this way it is possible to switch off a comparison according to bar code length.	1	STRING 30 characters null terminated	1 … 30 bytes of ASCII characters	\00	-

Table 10.54: Parameter module 83 – Reference code comparison pattern

Parameter length

31 byte

Input data

None

Output data

None

Notice!

The defined comparison pattern affects both reference code comparators (Module 81 – Reference code comparator 1 and Module 82 – Reference code comparator 2).
ASCII characters that cannot be displayed (<0x20h) must not be used in the comparison pattern.

10.15.4 Module 84 – Reference code comparison pattern 2

PROFINET-IO module identifier

Module-ID 1084

Submodule-ID 1

Description

This module can be used to define the 2nd comparison pattern

Parameter

Parameter	Description	Addr.	Data type	Value range	Default	Unit
Code type comparison pattern 2	Specifies the type of the reference bar code.	0	UNSIGNED8	0: No code 1: 2/5 Interleaved 2: Code39 3: Code32 6: UPC, UPCE 7: EAN8, EAN13 8: Code128 10: EAN Addendum 11: Codabar 12: Code93 13: GS1 DataBar Omnidirectional 14: GS1 DataBar Limited 15: GS1 DataBar Expanded	0	-
Comparison pattern 2	Parameter string describing the content of the reference bar code. Note: You can also use the two placeholder characters that are stored in the "Wildcard character" and "Don't care character" parameters. If the string is empty, no comparison takes place. If the most recently stored character is the wildcard character, the comparison is only carried out up to the character before this wildcard character. In this way it is possible to switch off a comparison according to bar code length.	1	STRING 30 characters null terminated	1 … 30 bytes of ASCII characters	\00	-

Table 10.55: Parameter module 84 – Reference code comparison pattern

Parameter length

31 byte

Input data

None

Output data

None

Notice!

The defined comparison pattern affects both reference code comparators (Module 81 – Reference code comparator 1 and Module 82 – Reference code comparator 2).
ASCII characters that cannot be displayed (<0x20h) must not be used in the comparison pattern.

10.16 Special Functions

10.16.1 Module 90 – Status and control

PROFINET-IO module identifier

Module-ID 1090

Submodule-ID 1

This module supplies various BCL 548*i* status information to the PROFINET-IO master. Various functions of the BCL 548*i* can be controlled via the master's output data.

Parameter

None

Input data

Input data	Description	Addr.	Data type	Value range	Init value	Unit
Reserved	Free	0.0	Bit		0	-
AutoRefl state	Signal state of the AutoRefl module	0.1	Bit	0: Reflector is recognized 1: Reflector is hidden	1	-
Auto Control result	Indicates whether the result of the AutoControl function was a good or bad reading.	0.2	Bit	0: Quality good 1: Quality bad	0	-
Reserved	Free	0.3	Bit		0	-
RefCode comparison state 1	The signal indicates whether the decoded bar code corresponds to the reference code with regard to the comparison criteria as defined in the comparison function 1. If it matches, the value 1 is output.	0.4 … 0.5	Bit	0: Not equal 1: Equal 2: Unknown	2	-
RefCode comparison state 2	The signal indicates whether the decoded bar code corresponds to the reference code with regard to the comparison criteria as defined in the comparison function 2. If it matches, the value 1 is output.	0.6 … 0.7	Bit	0: Not equal 1: Equal 2: Unknown	2	-

Table 10.56: Input data for module 90 – Status and control

Input data length

1 byte

Output data

None

10.16.2 Module 91 – AutoReflAct (automatic reflector activation)

PROFINET-IO module identifier

Module-ID 1091

Submodule-ID 1

Description

The module defines the mode of operation of the laser scanner for controlling the reading gate.

The AutoReflAct function uses the scanning beam to simulate a photoelectric sensor and thus permits an activation without additional sensory mechanism. This is achieved by directing the scanner with reduced scanning beam towards a reflector mounted behind the conveyor path. As long as the scanner is targeted at the reflector, the reading gate remains closed. If, however, the reflector is blocked by an object such as a container with a bar code label, the scanner activates the read procedure, and the label on the container is read. When the path from the scanner to the reflector has cleared, the read procedure has completed and the scanning beam is reduced and again directed onto the reflector. The reading gate is closed.

Parameter

Parameter	Description	Addr.	Data type	Value range	Default	Unit
Mode	This parameter activates the function of the laser scanner. If "Autom. reading gate control" is set as the parameter value, the BCL activates the reading gate automatically if the reflector is obscured.	0	UNSIGNED8	0: **Normal** AutoreflAct switched off. 1: **Auto** AutoreflAct activated. Autom. reading gate control. 2: **Manual** AutoreflAct activated. No reading gate control, signaling only.	0	-
Debouncing	The parameter defines the debounce time in scans for the reflector detection With a motor speed of 1000, 1 scan corresponds to a debounce time of 1 ms.	1	UNSIGNED8	1 … 16	5	-

Table 10.57: Parameters for module 91 – AutoreflAct

Parameter length

2 bytes

Input data

None

Output data

None

10.16.3 Module 92 – AutoControl

PROFINET-IO module identifier

Module-ID 1092

Submodule-ID 1

Description

The module defines the mode of operation of the function AutoControl. The function monitors the quality of the decoded bar codes and compares these with a limit value. If the limit is reached, a status is set.

Parameter

Parameter	Description	Addr.	Data type	Value range	Default	Unit
AutoControl enable	This parameter can be used to activate or deactivate the AutoControl function.	0	UNSIGNED8	0: deactivated 1: activated	0	-
Limit for reading quality	The parameter defines a threshold for the reading quality.	1	UNSIGNED8	0 … 100	50	%
Sensitivity	With this parameter the sensitivity towards changes in the reading ability can be specified. The higher the value, the less influence a change of reading ability has.	2	UNSIGNED8	0 … 255	0	-

Table 10.58: Parameters for module 92 – AutoControl

Parameter length

3 byte

Input data

Input data	Description	Addr.	Data type	Value range	Init value	Unit
Scan quality	Represents the current average value of the scan quality (at the time of the last reading gate).	0	UNSIGNED8	0 … 100	0	-

Table 10.59: Input data for module 92 – AutoControl

Input data length

1 byte

Output data

None

Notice:

By means of the AutoControl function, it is possible to detect bar codes of decreasing quality and thus take appropriate measures before the label is no longer legible. With activated AutoControl function, note that the "Processing end at end of label" parameter in the CRT module should be set to allow for a better assessment of the bar code quality (see also "Module 7 – Code fragment technology" on page 140).

10.17 Example configuration: Indirect activation via the PLC

10.17.1 Task

- Reading of a 10-digit code in 2/5 Interleaved format
- Indirect activation of the BCL 548*i* via the PLC

Code sample

Code 2/5 Interleaved 10 digits with check digit

‹z"{,;›
2234234459

10.17.2 Procedure

Hardware, connections

The following connections must have been established:

- Voltage supply (PWR)
- PROFINET-IO (HOST/BUS) In

Required modules

Include the following modules in your project:

- Module 1010 – Activations
- Module 1023 – Decoding result 12 bytes

Parameter settings

No parameters need to be set separately. The standard parameter set provides all required functions.

Flow diagrams

Successful reading:

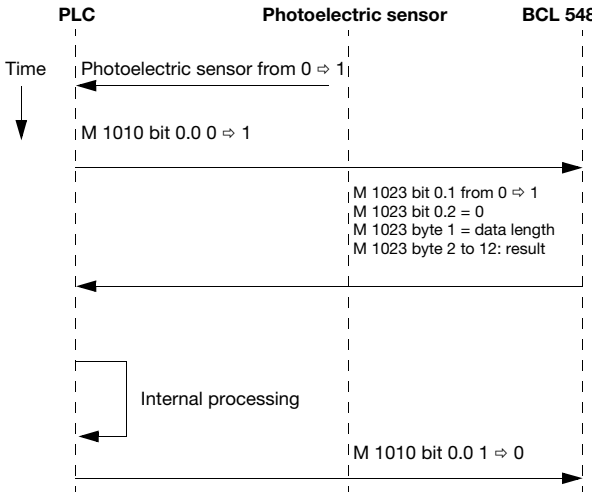

Description
The photoelectric sensor is interrupted.
Activation bit 0.0 is set to 1. This activates the reading gate.
The bar codes that have been read are processed and transmitted by module 1023: Reading concluded bit 0.1 = 1 and bar code not decoded bit 0.2 = 0. The data length is entered in byte 1, in this case 9 decimal. The decoding result is transmitted in the following 11 bytes.
Internal data processing.
Activation bit 0.0 is reset to 0.

Unsuccessful reading:

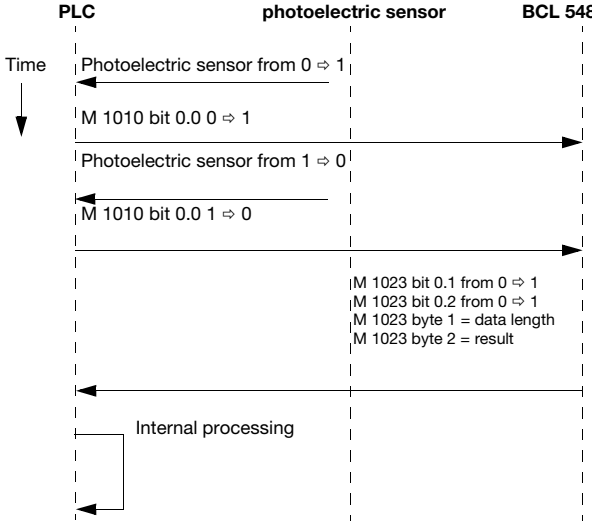

Description
The photoelectric sensor is interrupted.
Activation bit 0.0 is reset to 1.
The reading gate elapses without read result.
Activation bit 0.0 is reset to 0.
The module decoding state signals: Reading concluded bit 0.1 = 1 and bar code **not** decoded bit 0.2 = 1. The data length is entered in byte 1. The result hex 3F ("?" = no read) is transmitted.
Internal processing of the data and signaling of the non-reading.

10.18 Sample configuration: Direct activation via the switching input

10.18.1 Task

- Reading of a 12-digit bar code in 2/5 Interleaved format
- Direct activation of the BCL 548*i* via a photoelectric sensor

Code sample

Code 2/5 Interleaved 12 digits with check digit

561234765436

10.18.2 Procedure

Hardware, connections

The following connections must have been established:

- Voltage supply (PWR)
- PROFINET-IO (HOST/BUS) In
- Photoelectric sensor at SWIO1

Required modules

Include the following modules in your project:

- Module 1023 – Decoding result 12 bytes

Parameter settings of the "device parameters"

Byte	Description	Init value	Change value to:
1	Code type 1	0	01: 2/5 Interleaved
4	Digits 3	0	12

Table 10.60: Device parameters for example configuration 2

Flow diagrams

Successful reading:

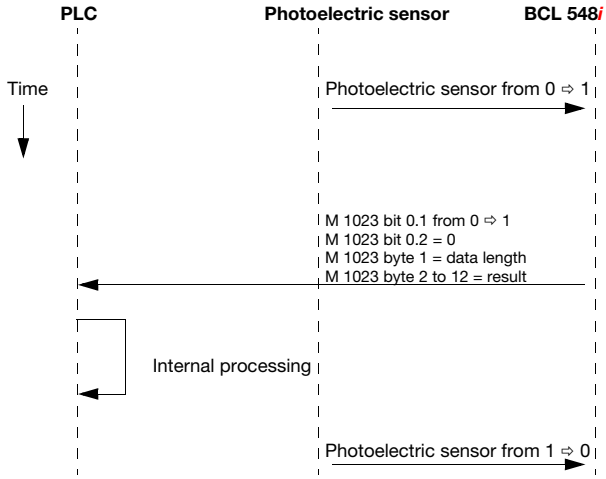

Description
The photoelectric sensor is interrupted. The signal of the switching output of the photoelectric sensor is present at the switching input of the BCL 548*i* and activates the scanner.
The bar codes that have been read are processed and transmitted by module 1023: Reading concluded bit 0.1 = 1 and bar code not decoded bit 0.2 = 0. The data length is entered in byte 1, in this case 11 decimal. The decoding result is transmitted in the following 11 bytes.
Internal data processing.
The beam of the photoelectric sensor is cleared and sets the switching input of the BCL 548*i* to 0. This deactivates the scanner.

Unsuccessful reading:

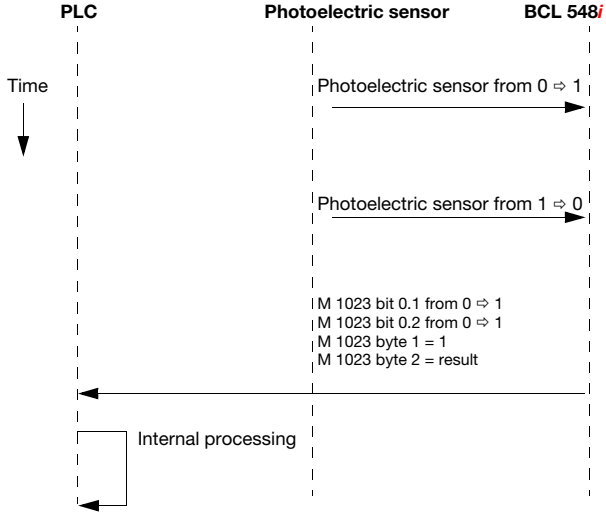

Description
The photoelectric sensor is interrupted. The signal of the switching output of the photoelectric sensor is present at the switching input of the BCL 548*i* and activates the scanner.
The beam of the photoelectric sensor is cleared before a read result is present. The photoelectric sensor sets the switching input of the BCL 548*i* to 0 and deactivates the scanner.
The module decoding state signals: Reading concluded bit 0.1 = 1 and bar code **not** decoded bit 0.2 = 1. The data length is entered in byte 1. The result hex 3F ("?" = no read) is transmitted.
Internal data processing

11 Online commands

11.1 Overview of commands and parameters

Online commands can be used to send commands directly to the device for control and configuration.

For this purpose, the BCL 548*i* must be connected to a host- or service computer via the interface. The commands described can be sent either via the host or the service interface.

Online commands

With the commands, you can:

- control/decode.
- read/write/copy parameters.
- carry out an automatic configuration.
- teach-in/set reference codes.
- call up error messages.
- call up statistical device information.
- carry out a software reset in order to reinitialize the device.

Syntax

"Online" commands consist of one or two ASCII characters followed by command parameters.

No separation characters may be entered between the command and the command parameter(s). Both small and capitalized letters can be used.

Example:

Command **'CA'**: autoConfig function

Parameter **'+'**: Activation

Transmitted is: **'CA+'**

Notation

Commands, command parameters and returned data are enclosed between single quotation marks **' '** in the text of this manual.

Most online commands are acknowledged by the BCL 548*i* and any requested data returned. For commands that are not acknowledged, command execution can be observed or monitored directly on the device.

11.1.1 General 'online' commands

Software version number

Command	’V’
Description	Requests device version information
Parameter	no
Acknowledgment	**'BCL 500i SM 100 V 1.3.8 2008-02-15'** The first line contains the device type of the BCL 548*i*, followed by the device version number and version date. (The data which is actually displayed may vary from the values given here.)

Notice!

This command returns the major release number of the software packet. This major release number also appears on the display during start-up.
This command can be used to check whether the connected host or service computer is properly connected and configured. If you do not receive an acknowledgement, please check interface connections, protocol and service switches.

Software reset

Command	’H’
Description	Carries out a software reset. The device is restarted and reinitialized, leaving it in the same state as when the supply voltage is switched on.
Parameter	no
Acknowledgment	**’S’** (start signal)

Code recognition

Command	'CC'
Description	Detects an unknown bar code and outputs number of digits, code type, and code information to the interface, without storing the bar code in the parameter memory.
Parameter	no
Acknowledgment	**'xx yy zzzzzz'** **xx**: No. of digits of the read code **yy**: Code type of the read code **'01'** 2/5 Interleaved **'02'** Code 39 **'03'** Code 32 **'06'** UPC (A, E) **'07'** EAN **'08'** Code 128, EAN 128 **'10'** EAN Addendum **'11'** Codabar **'12'** Code 93 **'13'** GS 1 Databar Omnidirectional **'14'** GS 1 Databar Limited **'15'** GS 1 Databar Expanded **zzzzzz**: Contents of the decoded label. A ↑ appears if the label was not correctly read.

autoConfig

Command	'CA'
Description	Activates or deactivates the 'autoConfig' function. BCL 548*i*Certain label reading parameters are programmed automatically in the setup by the labels which are read while the 'autoConfig' function is active.
Parameter	**'+'** Activates 'autoConfig' **'/'** Rejects the last code read **'-'** Deactivates 'autoConfig' and stores the decoded data in the current parameter set
Acknowledgment	**'CSx'** **x** Status **'0'** Valid **'CA'** command **'1'** Invalid command **'2'** autoConfig could not be activated **'3'** autoConfig could not be deactivated **'4'** Result could not be deleted
Description	**'xx yy zzzzzz'** **xx** No. of digits of the read code **yy** Code type of the read code **'01'** 2/5 Interleaved **'02'** Code 39 **'03'** Code 32 **'06'** UPC (A, E) **'07'** EAN **'08'** Code 128, EAN 128 **'10'** EAN Addendum **'11'** Codabar **'12'** Code 93 **'13'** GS 1 Databar Omnidirectional **'14'** GS 1 Databar Limited **'15'** GS 1 Databar Expanded **zzzzzz**: Contents of the decoded label. A ↑ appears if the label was not correctly read.

Alignment mode

Command	'JP'
Description	This command simplifies mounting and alignment of the BCL 548*i*. After activating the function with **'JP+'**, the BCL 548*i* continuously supplies status information to the serial interfaces. With this online command, the scanner is set to terminate the decoding after 100 successfully decoded labels and output the status information. Subsequently, the read process is reactivated automatically. In addition to the output of the status information, the laser beam is used to display the reading quality. Depending on how many read results could be extracted, the duration of the laser's "off" time increases. If the reading quality is high, the laser beam flashes in brief, regular intervals. The worse the decoder decodes, the longer the pauses become during which the laser is switched off. The flashing intervals become more and more irregular because the laser may, in total, be active for longer to extract more labels. The duration of the pauses has been stepped in such a way that they can be distinguished by the eye.
Parameter	**'+'**: Starts the adjustment mode. **'-'**: Ends the adjustment mode.
Acknowledgment	**'yyy_zzzzzz'** **yyy**: Reading quality in %. A high process availability is ensured at read qualities > 75%. **zzzzzz**: Bar code information.

Manual definition of the reference code

Command	RS
Description	This command can be used to define a new reference code in the BCL 548*i* by means of direct input via the serial interface. The data is saved in the parameter set according to your input under reference code 1 through 2 and stored in the working buffer for direct further processing.
Parameter	**'RSyvxxzzzzzzzz'** **y**, **v, x** and **z** are placeholders (variables) for the actual input. **y** Defined reference code no. **'1'** (Code 1) **'2'** (Code 2) **v** Storage location for reference code: **'0'** RAM+EEPROM, **'3'** RAM only **xx** Defined code type (see command 'CA') **z** Defined code information (1 … 63 characters)
Acknowledgment	**'RSx'** **x** Status **'0'** Valid '**Rx**' command **'1'** Invalid command **'2'** Insufficient memory for reference code **'3'** Reference code has not been saved **'4'** Reference code invalid
Example	Input = 'RS130678654331' (Code 1 (1), RAM only (3), UPC (06), code information)

Reference-code teach-in

Command	'RT'
Description	This command enables a reference code to be defined quickly by reading an example label.
Parameter	**'RTy'** **y** Function **'1'** Defines reference code 1 **'2'** Defines reference code 2 **'+'** Activates the definition of reference code 1 up to the value of Parameter no_of_labels **'-'** Exits the Teach-in process
Acknowledgment	The BCL 548*i* first responds with the command **'RS'** and corresponding status (see command 'RS'). After a bar code has been read, it sends the result in the following format: **'RCyvxxzzzzz'** **y**, **v**, **x** and **z** are placeholders (variables) for the actual input. **y** Defined reference code no. **'1'** (Code 1) **'2'** (Code 2) **v** Memory location for reference code **'0'** RAM+EEPROM, **'3'** RAM only **xx** Defined code type (see command 'CA') **z** Defined code information (1 … 63 characters)

Notice!

With this function, only code types are recognized that are identified using the autoConfig function or which were set in the setup.

↳ *After each reading via an 'RTy' command, explicitly switch off the function again since failure to do so will interfere with other commands as well as prevent execution of a new 'RTx' command.*

Reading a reference code

Command	’RR’
Description	The command reads out the reference code defined in the BCL 548*i*. If no parameters are specified, all defined codes are output.
Parameter	<Reference code number> **’1’ … ’2’** value range of reference codes 1 to 2
Acknowledgment	If no reference codes are defined, the BCL 548*i* responds with the **’RS’** command and corresponding status (see command ’RS’)**.** For valid codes, the output corresponds to the following format: **RCyvxxzzzzzz** **y**, **v, x** and **z** are placeholders (variables) for the actual input. **y** Defined reference code no. **’1’** (Code 1) **’2’** (Code 2) **v** Memory location for reference code **’0’** RAM+EEPROM, **’3’** RAM only **xx** Defined code type (see command ’CA’) **z** Defined code information (1 … 63 characters)

11.1.2 'Online' commands for system control

Activating sensor input

Command	'+'
Description	The command activates decoding. This command is used to activate the reading gate. It remains active until it is deactivated by one of the following criteria: • Deactivation by a manual command • Deactivation by a switching input • Deactivation upon reaching the specified read quality (equal scans) • Deactivation by timeout • Deactivation upon reaching a preset number of scans without information.
Parameter	no
Acknowledgment	None

Deactivating sensor input

Command	'-'
Description	The command deactivates decoding. This command can be used to deactivate the reading gate. Following deactivation, the read result is output. Because the reading gate was manually deactivated and, thus, no GoodRead criterion was met, a NoRead is output.
Parameter	no
Acknowledgment	None

System boot-up

Command	'SON'
Description	System boot-up: reactivates the BCL 548*i* from standby mode back to operating mode. The polygon wheel motor is started, the BCL 548*i* works as usual.
Parameter	no
Acknowledgment	**'S'** (start signal)

System Standby

Command	'SOS'
Description	System Standby: puts the BCL 548*i* in standby mode. The BCL 548*i* cannot be triggered, and the polygon wheel motor is stopped.
Parameter	no
Acknowledgment	None

11.1.3 ’Online’ commands for configuration of switching inputs/outputs

Activate switching output

Command	’OA’
Description	The switching outputs 1 - 4 can be activated with this command. The respective port must have been configured as a switching output. The logic state is output, i.e., an inverted logic is taken into account (e.g., inverted logic and a state of High corresponds to a voltage of 0V at the switching output).
Parameter	**’OA<a>’** <a> Selected switching output [1..4], unit [dimensionless]
Acknowledgment	None

Query the state of the switching outputs

Command	’OA’
Description	This command may be used to query the states of the switching inputs and outputs that are configured as a switching output and that have been set via commands. The logic state is output, i.e., an inverted logic is taken into account (e.g., inverted logic and a state of High corresponds to a voltage of 0V at the switching output).
Parameter	**’OA?’**
Acknowledgment	**’OA S1=<a>;S2=<a>[;S3=<a>][;S4=<a>]’** **<a>** State of the switching outputs **’0’** Low **’1’** High **’I’** Configuration as switching input **’P’** Passive configuration

Set the state of the switching outputs

Command	’OA’
Description	This command is used to set the states of the switching inputs/outputs that are configured as a switching output. The logic state is specified, i.e., an inverted logic is taken into account (e.g., inverted logic and a state of High corresponds to a voltage of 0V at the switching output). The values of the switching inputs/outputs that are not configured as switching outputs are ignored. You may also use only a selection of the existing switching inputs/outputs as long as these are listed in ascending order.
Parameter	**’OA [S1=<a>][;S2=<a>][;S3=<a>][;S4=<a>]’** **<a>** State of the switching output **’0’** Low **’1’** High
Acknowledgment	**’OA=<aa>’** **<aa>** Status acknowledgement, unit [dimensionless] **’00’** OK **’01’** Syntax error **’02’** Parameter error **’03’** Other error

Deactivate switching output

Command	’OD’
Description	The switching outputs 1 - 4 can be deactivated with this command. The respective port must have been configured as a switching output. The logic state is output, i.e., an inverted logic is taken into account (e.g., inverted logic and a state of High corresponds to a voltage of 0V at the switching output).
Parameter	**’OD<a>’** <a> Selected switching output [1..4], unit [dimensionless]
Acknowledgment	None

Query the configuration of the switching inputs/outputs

Command	’OF’
Description	This command may be used to query the configuration of the switching inputs/outputs 1 to 4.
Parameter	**’OF?’**
Acknowledgment	**’OF S1=<a>;S2=<a>[;S3=<a>][;S4=<a>]’** **<a>** Function of the switching input/ output, unit [dimensionless]’ **’I’** Switching input **’O’** Switching output **’P’** Passive

Configure the switching inputs/ outputs

Command	’OF’
Description	This command may be used to configure the function of the switching inputs/outputs 1 to 4. You may also use only a selection of the existing switching inputs/outputs as long as these are listed in ascending order.
Parameter	**’OF [S1=<a>][;S2=<a>][;S3=<a>][;S4=<a>]’** **<a>** Function of the switching input/ output, unit [dimensionless]’ **’I’** Switching input **’O’** Switching output **’P’** Passive
Acknowledgment	**’OF=<bb>’** **<bb>** Status acknowledgement **’00’** OK **’01’** Syntax error **’02’** Parameter error **’03’** Other error

11.1.4 'Online' commands for the parameter set operations

Copying parameter set

Command	'PC'
Description	This command can only be used to copy parameter sets in their entirety. This can be used to replicate the three parameter sets **default**, **permanent** and **operating parameters** on the basis of one another. In addition, this command can also be used to restore the factory settings.
Parameter	**'PC<Source type><Target type>'** **<Source type>** Parameter data set which is to be copied, unit [dimensionless] **'0'** Parameter data set in permanent memory **'2'** Default or factory parameter set **'3'** Operating parameter data set in volatile memory **<Target type>** Parameter set to which the data is to be copied, unit [dimensionless] **'0'** Parameter data set in permanent memory **'3'** Operating parameter data set in volatile memory Permissible combinations here include: **'03'** Copying the data set from the permanent memory to the operating parameter data set **'30'** Copying the operating parameter data set to the permanent parameter set memory **'20'** Copying the default parameters to the permanent memory and to the main memory
Acknowledgment	**'PS=<aa>'** **<aa>** Status acknowledgement, unit [dimensionless] **'00'** OK **'01'** Syntax error **'02'** Impermissible command length **'03'** Reserved **'04'** Reserved **'05'** Reserved **'06'** Impermissible combination, source type - target type

Requesting parameter data set from BCL 548i

Command	'PR'
Description	The parameters of the BCL 548*i* are grouped together in a parameter set and permanently stored in memory. There is one parameter set in permanent memory and one operating parameter set in volatile memory; in addition, there is a default parameter set (factory parameter set) for initialization. This command can be used to edit the first two parameter sets (in permanent and volatile memory). A check sum can be used for reliable parameter transfer.
Parameter	**'PR<BCC type><PS type><Address><Data length>[<BCC>]'** **<BCC type>** Check-digit function during transfer, unit [dimensionless] **'0'** Not used **'3'** BCC mode 3 **<PS type>** Memory from which the values are to be read, unit [dimensionless] **'0'** Parameter values stored in the flash memory **'1'** Reserved **'2'** Default values **'3'** Operating values in RAM **<Address>** Relative address of the data within the data set **'aaaa'** Four-digit, unit [dimensionless] **<Data length>** Length of the parameter data to be transferred **'bbbb'** Four-digit, unit [length in bytes] **<BCC>** Check sum calculated as specified under BCC type

Command	'PR'
Acknowledgment positive	**PT<BCC type><PS type><Status><Start> <Address parameter value><Address+1 parameter value>… [;<Address><Address parameter value>][<BCC>]** **<BCC type>** Check-digit function during transfer, unit [dimensionless] **'0'** Not used **'3'** BCC mode 3 **<PS type>** Memory from which the values are to be read, unit [dimensionless] **'0'** Parameter values stored in the flash memory **'2'** Default values **'3'** Operating values in RAM **<Status>** Mode of parameter processing, unit [dimensionless] **'0'** No further parameters **'1'** Additional parameters follow **<Start>** Relative address of the data within the data set, **'aaaa'** Four-digit, unit [dimensionless] **<P.value A.>** Parameter value of the parameter stored at this address; the parameter set data **'bb'** is converted from HEX format to a 2-byte ASCII-format for transfer. **<BCC>** Check sum calculated as specified under BCC type
Acknowledgment negative	**'PS=<aa>'** Parameter reply: **<aa>** Status acknowledgement, unit [dimensionless] **'01'** Syntax error **'02'** Impermissible command length **'03'** Impermissible value for checksum type **'04'** Invalid check sum received **'05'** Impermissible number of data requested **'06'** Requested data does not (any longer) fit in the transmission buffer **'07'** Impermissible address value **'08'** Read access after end of data set **'09'** Impermissible QPF data set type

Determining parameter set difference to default parameters

Command	'PD'
Description	This command outputs the difference between the default parameter set and the operating parameter set or the difference between the default parameter set and the permanent parameter set. **Comment**: The reply supplied by this command can e.g. be directly used for programming a device with factory settings, whereby this device receives the same configuration as the device on which the PD-sequence was executed.
Parameter	**'PD<P.set1><P.set2>'** **<P.set1>** Parameter data set which is to be copied, unit [dimensionless] **'0'** Parameter data set in permanent memory **'2'** Default or factory parameter set **<P.set2>** Parameter set to which the data is to be copied, unit [dimensionless] **'0'** Parameter data set in permanent memory **'3'** Operating parameter data set in volatile memory Permissible combinations here include: **'20'** Output of the parameter differences between the default and the permanently saved parameter set **'23'** Output of the parameter differences between the default parameter set and the operating parameter set saved in volatile memory **'03'** Output of the parameter differences between the permanent parameter set and the operating parameter set saved in volatile memory
Acknowledgment positive	**PT<BCC><PS type><Status><Adr.><P.value adr.><P.valueAdr.+1>…** **[;<Adr.><P.value adr.>]** **<BCC>** **'0'** No check digit **'3'** BCC mode 3 **<PS type>** **'0'** Values stored in flash memory **'3'** Operating values stored in RAM **<Status>** **'0'** No further parameters **'1'** Additional parameters follow **<Adr.>** Relative address of the data within the data set **'aaaa'** Four-digit, unit [dimensionless] **<P.value>** Parameter value of the -bb- parameter stored at this address. The parameter set data is converted from HEX format to a 2-byte-ASCII format for transfer.

Command	'PD'
Acknowledgment negative	**'PS=<aa>'** **<aa>** Status acknowledgement, unit [dimensionless] **'0'** No difference **'1'** Syntax error **'2'** Impermissible command length **'6'** Impermissible combination, parameter set 1 and parameter set 2 **'8'** Invalid parameter set

Writing parameter set

Command	'PT'
Description	The parameters of the BCL 548*i* are grouped together in a parameter set and permanently stored in memory. There is one parameter set in permanent memory and one operating parameter set in volatile memory; in addition, there is a default parameter set (factory parameter set) for initialization. This command can be used to edit the first two parameter sets (in permanent and volatile memory). A check sum can be used for reliable parameter transfer.

Command	'PT'
Parameter	**PT<BCC type><PS type><Status><Adr.><P.value adr.> <P.value adr+1>…[;<Adr.><P.value adr.>][<BCC>]** **<BCC type>** Check-digit function during transfer, unit [dimensionless] **'0'** No check digit **'3'** BCC mode 3 **<PS type>** Memory from which the values are to be read, unit [dimensionless] **'0'** Parameter values stored in the flash memory **'3'** Operating values stored in RAM **<Status>** Mode of parameter processing, without function here, unit [dimensionless] **'0'** No reset after parameter change, no further parameters **'1'** No reset after parameter change, additional parameters follow **'2'** With reset after parameter change, no further parameters **'6'** Set parameters to factory setting, no further parameters **'7'** Set parameters to factory settings, lock all code types; the code-type setting must follow in the command! **<Adr.>** Relative address of the data within the data set, **'aaaa'** Four-digit, unit [dimensionless] **<P.value>** Parameter value of the -bb- parameter stored at this address. The parameter set data is converted from HEX format to a 2-byte-ASCII format for transfer. **<BCC>** Check sum calculated as specified under BCC type
Acknowledgment	**'PS=<aa>'** Parameter reply: **<aa>** Status acknowledgement, unit [dimensionless] **'01'** Syntax error **'02'** Impermissible command length **'03'** Impermissible value for checksum type **'04'** Invalid check sum received **'05'** Impermissible data length **'06'** Invalid data (parameter limits violated) **'07'** Invalid start address **'08'** Invalid parameter set **'09'** Invalid parameter set type

12 Diagnostics and troubleshooting

For the PROFINET-IO, there are two different options for diagnosis.

Event-related diagnostics

PROFINET-IO transmits events within an automation process as alarms that must be acknowledged by the application process.

The following events are possible:

- Process alarms: Events that originate from the process and are reported to the control.
- Diagnostic alarms: Events that indicate the malfunctioning of an IO device.
- Maintenance alarms: Transmission of information to avoid the failure of a device through preventative maintenance work.
- Manufacturer-specific diagnostics

To identify the alarms uniquely, they are always reported via a slot/subslot. The user can prioritize diagnostic and process alarms differently.

State-related diagnostics

In addition, all alarms are entered into the diagnostics buffer. If required, this buffer can be read by a superior instance via acyclic read services.

A further option to report malfunctioning or status changes in a field device to a plant control is to enter low-priority diagnostic or status messages into the diagnostic buffer only instead of actively reporting them to the superior control.

This option can also be used for preventative maintenance or for low-priority warnings, for example.

The BCL 548*i* uses both the event-related diagnostics for high-prioritized events/errors as well as the state-related diagnostics for preventative maintenance and the signaling of low-prioritized events or warnings.

The following alarms and diagnostics messages are supported:

Diagnostics	Description	BCL 500*i* category	API/ Slot/ Subslot	Type	Coming/ going	Remark
Parameter error	Error in the configuration of a module.	Error	0/n[1)]/0	Diagnostics alarm[2)]	Coming only	
Configuration error	Error in the configuration of a module.	Error	0/n/0	Diagnostics alarm	Coming only	
Output Update Ignore Warning	The received output data could not be processed.	Warning	0/n/0	Diagnostics message	-	Output data buffer overflow
Temperature warning	The device temperature exceeds the threshold.	-	0/0/0	Process alarm	Coming/ going	Device-related

Diagnostics	Description	BCL 500*i* category	API/ Slot/ Subslot	Type	Coming/ going	Remark
Laser	The laser operating hour counter has exceeded the threshold.	Status	0/0/0	Precautionary maintenance	-	Device-related/precautionary maintenance
Device error	A manufacturer-specific critical device error has occurred.[3]	Error	0/0/0	Diagnostics alarm Manufacturer-specific	Coming only	A continued process operation of the device is impossible. This is also indicated by the activation of the PWR LED.
Fatal Error	A fatal error has occurred. This has caused a software reset.	Fatal Error [4]	0/0/0	Status message	-	Device-related

1) n = module number
2) Only diagnostics or process alarms actually trigger the transmission of an alarm. All other types (preventative maintenance and status messages) only lead to an entry into the diagnostics buffer and are thus part of the state-based diagnostics.
3) Collective diagnostic messages for critical device failures.
4) In the case of a fatal error, the BCL 548*i* carries out a software reset. After the warm start, the ErrorManager signals the error to the PROFINET application and enters it as status message into the diagnostics buffer.

Table 12.1: BCL 548*i* alarm and diagnostics messages

BCL 548i error category

The BCL 548*i* error category is relevant for prioritizing the alarm or the diagnostics message but is not transmitted alongside.

Error category	Alarm type	PWR LED
STATUS/INFO	Status message	Off
WARNING	Status message	Flashes
ERROR	Diagnostics alarm	ON
FATAL ERROR	Diagnostics alarm	ON[1]

1) The BCL 548*i* carries out a software reset.

Table 12.2: BCL 548*i* error categories

12.1 General causes of errors

Error	Possible error cause	Measures
Status LED **PWR**		
Off	• No supply voltage connected to the device • Hardware error	• Check supply voltage • Send device to customer service
Red, flashing	• Warning	• Query diagnostic data and carry out the resulting measures
Red, continuous light	• Error: no function possible	• Internal device error, send in device
Orange, continuous light	• Device in service mode	• Reset service mode with webConfig tool or display
Status LED **BUS**		
Off	• No supply voltage connected to the device • Device not yet recognized by the PROFINET-IO • Hardware error	• Check supply voltage • Send device to customer service • Send device to customer service
Red, flashing	• Communication error: Parameterization or configuration failed, IO error: No data exchange	• Check interface • Can be corrected by resetting
Red, continuous light	• Communication error on the PROFINET-IO: No communication to IO Controller established ("no data exchange")	• Check interface • Cannot be corrected by resetting • Send device to customer service

Table 12.1: General causes of errors

12.2 Interface errors

Error	Possible error cause	Measures
No communication via USB service interface	• Incorrect connection cable • Connected BCL 548*i* is not detected	• Check connection cable • Install USB driver
No communication via PROFINET-IO **BUS** status LED continuous red light	• Incorrect wiring • Different protocol settings • Protocol not released • Wrong termination • Incorrect device name set • Incorrect configuration	• Check wiring • Check protocol settings • Activate TCP/ IP or UDP • Check termination • Check device name • Check configuration of the device in the configuration tool
Sporadic errors at the PROFINET-IO	• Incorrect wiring • Effects due to EMC • Overall network expansion exceeded	• Check wiring • In particular, check wire shielding • Check the cable used • Check shielding (shield covering in place up to the clamping point) • Check grounding concept and connection to functional earth (FE) • Avoid EMC coupling caused by power cables laid parallel to device lines • Check max. network expansion as a function of the max. cable lengths

Table 12.1: Interface error

Notice!

*Please use **chapter 12 as a master copy** should servicing be required.*
Cross the items in the "Measures" column which you have already examined, fill out the following address field and fax the pages together with your service contract to the fax number listed below.

Customer data (please complete)

Device type:	
Company:	
Contact partner / department:	
Phone (direct):	
Fax:	
Street / No:	
ZIP code/City:	
Country:	

Leuze Service fax number:

+49 7021 573 - 199

13 Type overview and accessories

13.1 Type key

BCL 500i OM100H

Heating option	H =	With heating
Beam exit	0	Lateral
	2	Front
Optics	N	High Density (near)
	M	Medium Density (medium distance)
	F	Low Density (remote)
	L	Long Range (very large distances)
Scanning principle	S	Line scanner (single line)
	O	Oscillating-mirror scanner
	i =	Integrated fieldbus technology
Interface	0	RS 232/RS 422/RS 485 (multiNet Master)
	1	RS 485 (multiNet Slave)
	4	PROFIBUS DP
	8	ETHERNET TCP/IP, UDP
	48	PROFINET-IO RT
	BCL	Bar code reader

13.2 Type overviewBCL 548*i*

BCL 548i family

PROFINET-IO on 2x M12 D-coded

Type designation	Description	Part no.
High Density Optics (m = 0.25 … 0.5mm)		
BCL 548*i* SN 100	Line scanner with deflection mirror	50113185
BCL 548*i* SN 102	Line scanner, beam exit at the front	50113183
BCL 548*i* ON 100	Oscillating-mirror scanner	50113199
BCL 548*i* SN 100 H	Line scanner with deflection mirror, with heating	50113186
BCL 548*i* SN 102 H	Line scanner, beam exit at the front, with heating	50113184
BCL 548*i* ON 100 H	Oscillating-mirror scanner with heating	50113200
Medium Density Optics (m = 0.35 … 1.0mm)		
BCL 548*i* SM 100	Line scanner with deflection mirror	50113189
BCL 548*i* SM 102	Line scanner, beam exit at the front	50113187
BCL 548*i* OM 100	Oscillating-mirror scanner	50113201
BCL 548*i* SM 100 H	Line scanner with deflection mirror, with heating	50113190
BCL 548*i* SM 102 H	Line scanner, beam exit at the front, with heating	50113188
BCL 548*i* OM 100 H	Oscillating-mirror scanner with heating	50113202

Table 13.1: Type overview BCL 548*i*

Type designation	Description	Part no.
Low Density Optics (m = 0.5 … 1.0mm)		
BCL 548*i* SF 100	Line scanner with deflection mirror	50113197
BCL 548*i* SF 102	Line scanner, beam exit at the front	50113195
BCL 548*i* OF 100	Oscillating-mirror scanner	50113205
BCL 548*i* SF 100 H	Line scanner with deflection mirror, with heating	50113198
BCL 548*i* SF 102 H	Line scanner, beam exit at the front, with heating	50113196
BCL 548*i* OF 100 H	Oscillating-mirror scanner with heating	50113206
Ultra Low Density Optics (m = 0.7 … 1.0mm)		
BCL 548*i* SL 100	Line scanner with deflection mirror	50113193
BCL 548*i* SL 102	Line scanner, beam exit at the front	50113191
BCL 548*i* OL 100	Oscillating-mirror scanner	50113203
BCL 548*i* SL 100 H	Line scanner with deflection mirror, with heating	50113194
BCL 548*i* SL 102 H	Line scanner, beam exit at the front, with heating	50113192
BCL 548*i* OL 100 H	Oscillating-mirror scanner with heating	50113204

Table 13.1: Type overview BCL 548*i*

13.3 Accessory connectors

Type designation	Description	Part no.
KD 095-5A	M12 socket for voltage supply	50020501
KS 095-4A	M12 connector for SW IN/OUT	50040155
D-ET1	RJ45 connector for user-configuration	50108991
KDS ET M12 / RJ 45 W - 4P	Converter from M12 D-coded to RJ 45 socket	50109832
S-M12A-ET	Ethernet connector, M12 axial. Connector, 4-pin, D-coded	50112155

Table 13.2: Connectors for the BCL 548*i*

13.4 Accessory USB cable

Type designation	Description	Part no.
KB USB-Service	USB service cable	50107726

Table 13.3: Cable for the BCL 548*i*

13.5 Accessory external parameter memory

Type designation	Description	Part no.
USB Memory Set	External USB parameter memory	50108833

Table 13.4: External parameter memory for the BCL 548*i*

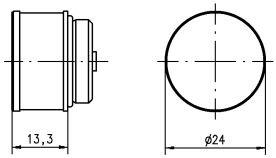

13.6 Accessory mounting device

Type designation	Description	Part no.
BT 56	Mounting device for rod	50027375
BT 59	Mounting device for ITEM	50111224

Table 13.5: Mounting devices for the BCL 548*i*

13.7 Accessory reflector for AutoReflAct

Type designation	Description	Part no.
Reflective tape no. 4 100 x 100 mm	Reflective tape as reflector for AutoReflAct operation	50106119

Table 13.6: Reflector for the BCL 548*i*

13.8 Accessory ready-made cables for voltage supply

13.8.1 Contact assignment of PWR connection cable

PWR connection cable (5-pin socket, A-coded)

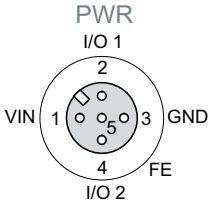

M12 socket (A-coded)

Pin	Name	Core color
1	VIN	brown
2	I/O 1	white
3	GND	blue
4	I/O 2	black
5	FE	gray
Thread	FE	bare

13.8.2 Specifications of the cables for voltage supply

Operating temperature range in rest state: -30°C … +70°C
in motion: 5°C … +70°C

Material sheathing: PVC

Bending radius > 50mm

13.8.3 Order codes of the cables for voltage supply

Type designation	Description	Part no.
K-D M12A-5P-5m-PVC	M12 socket for PWR, axial connector, open cable end, cable length 5m	50104557
K-D M12A-5P-10m-PVC	M12 socket for PWR, axial connector, open cable end, cable length 10m	50104559

Table 13.7: PWR cables for the BCL 548*i*

13.9 Accessory ready-made cables for bus connection

13.9.1 General information

- Cable **KB ET…** for connecting to PROFINET-IO via M12 connector
- Standard cable available in lengths from 2 … 30m
- Special cables on request.

13.9.2 Contact assignments M12 PROFINET-IO connection cable KB ET…

M12 PROFINET-IO connection cable (4-pin connector, D-coded, on both sides)

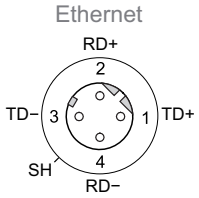

M12 plug (D-coded)

Pin	Name	Core color
1	TD+	yellow
2	RD+	white
3	TD-	orange
4	RD-	blue
SH (thread)	FE	bare

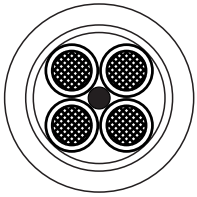

Wire colors

WH
YE
BU
OG

Conductor class: VDE 0295, EN 60228, IEC 60228 (Class 5)

Figure 13.1: Cable configuration PROFINET-IO connection cable

13.9.3 Specifications M12 PROFINET-IO connection cable KB ET…

Operating temperature range	in rest state: -50°C … +80°C in motion: -25°C … +80°C in motion: -25°C … +60°C (when used with drag chains)
Material	cable sheath: PUR (green), wire insulation: PE foam, free of halogens, silicone and PVC
Bending radius	> 65mm, suitable for drag chains
Bending cycles	> 10^6, perm. acceleration < $5 m/s^2$

13.9.4 Order codes M12 PROFINET-IO connection cable KB ET...

Type designation	Description	Part no.
M12 plug for BUS IN, axial connector, open cable end		
KB ET - 2000 - SA	Cable length 2m	50106739
KB ET - 5000 - SA	Cable length 5m	50106740
KB ET - 10000 - SA	Cable length 10m	50106741
KB ET - 15000 - SA	Cable length 15m	50106742
KB ET - 30000 - SA	Cable length 30m	50106746
M12 plug for BUS IN to RJ-45 connector		
KB ET - 2000 - SA-RJ45	Cable length 2m	50109880
KB ET - 5000 - SA-RJ45	Cable length 5m	50109881
KB ET - 10000 - SA-RJ45	Cable length 10m	50109882
KB ET - 15000 - SA-RJ45	Cable length 15m	50109883
KB ET - 30000 - SA-RJ45	Cable length 30m	50109886
M12 plug + M12 plug for BUS OUT to BUS IN		
KB ET - 2000 - SSA	Cable length 2m	50106899
KB ET - 5000 - SSA	Cable length 5m	50106900
KB ET - 10000 - SSA	Cable length 10m	50106901
KB ET - 15000 - SSA	Cable length 15m	50106902
KB ET - 30000 - SSA	Cable length 30m	50106905

Table 13.8: Bus connection cable for the BCL 548*i*

14 Maintenance

14.1 General maintenance information

Usually, the bar code reader BCL 548*i* does not require any maintenance by the operator.

Cleaning

In the event of dust buildup, clean the BCL 548*i* with a soft cloth; use a cleaning agent (commercially available glass cleaner) if necessary.

Notice!

Do not use aggressive cleaning agents such as thinner or acetone for cleaning the device. Use of improper cleaning agents can damage the optical window.

14.2 Repairs, servicing

Repairs to the device must only be carried out by the manufacturer.

↳ *Contact your Leuze distributor or service organization should repairs be required. The addresses can be found on the inside of the cover and on the back.*

Notice!

When sending devices to Leuze electronic for repair, please provide an accurate description of the error.

14.3 Disassembling, packing, disposing

Repacking

For later reuse, the device is to be packed so that it is protected.

Notice!

Electrical scrap is a special waste product! Observe the locally applicable regulations regarding disposal of the product.

15 Appendix

15.1 Declaration of conformity

Leuze electronic

the sensor people

EG-KONFORMITÄTS-ERKLÄRUNG	EC DECLARATION OF CONFORMITY	DECLARATION CE DE CONFORMITE
Der Hersteller	The Manufacturer	Le constructeur
	Leuze electronic GmbH + Co. KG **In der Braike 1, PO Box 1111** **73277 Owen, Germany**	
erklärt, dass die nachfolgend aufgeführten Produkte den einschlägigen Anforderungen der genannten EG-Richtlinien entsprechen.	declares that the following listed products fulfil the relevant provisions of the mentioned EC Directives.	déclare que les produits identifiés suivants sont conformes aux directives CE mentionnées.
Produktbeschreibung:	Description of product:	Description de produit:
Barcodeleser **BCL 5xxi...**	**Barcode Reader** **BCL 5xxi...**	**Lecteures de Code á Barres** **BCL 5xxi...**
Angewandte EG-Richtlinie(n):	Applied EC Directive(s):	Directive(s) CE appliquées:
2004/108/EG **2006/95/EG**	**2004/108/EC** **2006/95/EC**	**2004/108/CE** **2006/95/CE**
Angewandte Normen:	Applied standards:	Normes appliquées:
EN 61000-6-2: 2005 **EN 60825-1: 2007**		**EN 61000-6-4: 2007 + A11: 2011**

4.10.12
Datum / Date / Date

Dr. Harald Grübel, Geschäftsführer / Director / Directeur

Leuze electronic GmbH + Co. KG
In der Braike 1
D-73277 Owen
Telefon +49 (0) 7021 573-0
Telefax +49 (0) 7021 573-199
info@leuze.de
www.leuze.com

LEO-ZQM-148-02-FO

Leuze electronic GmbH + Co. KG, Sitz Owen, Registergericht Stuttgart, HRA 230712
Persönlich haftende Gesellschafterin Leuze electronic Geschäftsführungs-GmbH, Sitz Owen, Registergericht Stuttgart, HRB 230550
Geschäftsführer: Dr. Harald Grübel (Vorsitzender), Dr. Matthias Kirchherr
USt.-IdNr: DE 145912521 | Zollnummer 2554232
Es gelten ausschließlich unsere aktuellen Verkaufs- und Lieferbedingungen
Only our current Terms and Conditions of Sale and Delivery shall apply

15.2 ASCII character set

ASCII	Dec.	Hex.	Oct.	Designation	Meaning
NUL	0	00	0	NULL	Null
SOH	1	01	1	START OF HEADING	Start of heading
STX	2	02	2	START OF TEXT	Start of text characters
ETX	3	03	3	END OF TEXT	Last character of text
EOT	4	04	4	END OF TRANSMISS.	End of transmission
ENQ	5	05	5	ENQUIRY	Request for data trans.
ACK	6	06	6	ACKNOWLEDGE	Positive acknowledgement
BEL	7	07	7	BELL	Bell signal
BS	8	08	10	BACKSPACE	Backspace
HT	9	09	11	HORIZ. TABULATOR	Horizontal tabulator
LF	10	0A	12	LINE FEED	Line feed
VT	11	0B	13	VERT. TABULATOR	Vertical tabulator
FF	12	0C	14	FORM FEED	Form feed
CR	13	0D	15	CARRIAGE RETURN	Carriage return
SO	14	0E	16	SHIFT OUT	Shift out
SI	15	0F	17	SHIFT IN	Shift in
DLE	16	10	20	DATA LINK ESCAPE	Data link escape
DC1	17	11	21	DEVICE CONTROL 1	Device control character 1
DC2	18	12	22	DEVICE CONTROL 2	Device control character 2
DC3	19	13	23	DEVICE CONTROL 3	Device control character 3
DC4	20	14	24	DEVICE CONTROL 4	Device control character 4
NAK	21	15	25	NEG. ACKNOWLEDGE	Negative acknowledge
SYN	22	16	26	SYNCRONOUS IDLE	Synchronization
ETB	23	17	27	EOF TRANSM. BLOCK	End of data transmission block
CAN	24	18	30	CANCEL	Invalid
EM	25	19	31	END OF MEDIUM	End of medium
SUB	26	1A	32	SUBSTITUTE	Substitution
ESC	27	1B	33	ESCAPE	Escape
FS	28	1C	34	FILE SEPARATOR	File separator
GS	29	1D	35	GROUP SEPARATOR	Group separator
RS	30	1E	36	RECORD SEPARATOR	Record separator
US	31	1F	37	UNIT SEPARATOR	Unit separator
SP	32	20	40	SPACE	Space
!	33	21	41	EXCLAMATION POINT	Exclamation point

ASCII	Dec.	Hex.	Oct.	Designation	Meaning
"	34	22	42	QUOTATION MARK	Quotation mark
#	35	23	43	NUMBER SIGN	Number sign
$	36	24	44	DOLLAR SIGN	Dollar sign
%	37	25	45	PERCENT SIGN	Percent sign
&	38	26	46	AMPERSAND	Ampersand
’	39	27	47	APOSTROPHE	Apostrophe
(	40	28	50	OPEN. PARENTHESIS	Open parenthesis
)	41	29	51	CLOS. PARENTHESIS	Closed parenthesis
*	42	2A	52	ASTERISK	Asterisk
+	43	2B	53	PLUS	Plus sign
,	44	2C	54	COMMA	Comma
-	45	2D	55	HYPHEN (MINUS)	Hyphen
.	46	2E	56	PERIOD (DECIMAL)	Period (decimal)
/	47	2F	57	SLANT	Slant
0	48	30	60	0	Number
1	49	31	61	1	Number
2	50	32	62	2	Number
3	51	33	63	3	Number
4	52	34	64	4	Number
5	53	35	65	5	Number
6	54	36	66	6	Number
7	55	37	67	7	Number
8	56	38	70	8	Number
9	57	39	71	9	Number
:	58	3A	72	COLON	Colon
;	59	3B	73	SEMICOLON	Semicolon
<	60	3C	74	LESS THAN	Less than
=	61	3D	75	EQUALS	Equals
>	62	3E	76	GREATER THAN	Greater than
?	63	3F	77	QUESTION MARK	Question mark
@	64	40	100	COMMERCIAL AT	Commercial AT
A	65	41	101	A	Capital letter
B	66	42	102	B	Capital letter
C	67	43	103	C	Capital letter
D	68	44	104	D	Capital letter

ASCII	Dec.	Hex.	Oct.	Designation	Meaning
E	69	45	105	E	Capital letter
F	70	46	106	F	Capital letter
G	71	47	107	G	Capital letter
H	72	48	110	H	Capital letter
I	73	49	111	I	Capital letter
J	74	4A	112	J	Capital letter
K	75	4B	113	K	Capital letter
L	76	4C	114	L	Capital letter
M	77	4D	115	M	Capital letter
N	78	4E	116	N	Capital letter
O	79	4F	117	O	Capital letter
P	80	50	120	P	Capital letter
Q	81	51	121	Q	Capital letter
R	82	52	122	R	Capital letter
S	83	53	123	S	Capital letter
T	84	54	124	T	Capital letter
U	85	55	125	U	Capital letter
V	86	56	126	V	Capital letter
W	87	57	127	W	Capital letter
X	88	58	130	X	Capital letter
Y	89	59	131	Y	Capital letter
Z	90	5A	132	Z	Capital letter
[	91	5B	133	OPENING BRACKET	Opening bracket
\	92	5C	134	REVERSE SLANT	Reverse slant
]	93	5D	135	CLOSING BRACKET	Closing bracket
^	94	5E	136	CIRCUMFLEX	Circumflex
_	95	5F	137	UNDERSCORE	Underscore
‘	96	60	140	GRAVE ACCENT	Grave accent
a	97	61	141	a	Lower case letter
b	98	62	142	b	Lower case letter
c	99	63	143	c	Lower case letter
d	100	64	144	d	Lower case letter
e	101	65	145	e	Lower case letter
f	102	66	146	f	Lower case letter
g	103	67	147	g	Lower case letter

ASCII	Dec.	Hex.	Oct.	Designation	Meaning
h	104	68	150	h	Lower case letter
i	105	69	151	i	Lower case letter
j	106	6A	152	j	Lower case letter
k	107	6B	153	k	Lower case letter
l	108	6C	154	l	Lower case letter
m	109	6D	155	m	Lower case letter
n	110	6E	156	n	Lower case letter
o	111	6F	157	o	Lower case letter
p	112	70	160	p	Lower case letter
q	113	71	161	q	Lower case letter
r	114	72	162	r	Lower case letter
s	115	73	163	s	Lower case letter
t	116	74	164	t	Lower case letter
u	117	75	165	u	Lower case letter
v	118	76	166	v	Lower case letter
w	119	77	167	w	Lower case letter
x	120	78	170	x	Lower case letter
y	121	79	171	y	Lower case letter
z	122	7A	172	z	Lower case letter
{	123	7B	173	OPENING BRACE	Opening brace
|	124	7C	174	VERTICAL LINE	Vertical line
}	125	7D	175	CLOSING BRACE	Closing brace
~	126	7E	176	TILDE	Tilde
DEL	127	7F	177	DELETE (RUBOUT)	Delete

15.3 Bar code samples

15.3.1 Module 0.3

Code type 01: Interleaved 2 of 5

Modul 0,3

1122334455

Code type 02: Code 39

Modul 0,3

135AC

Code type 11: Codabar

Modul 0,3

A1213 14A

Code 128

Modul 0,3

abcde

Code type 08: EAN 128

Modul 0,3

leuze

Code type 06: UPC-A

SC 2

1 23456 78901 2

Code type 07: EAN 8

SC 3

3456 7890

Code type 10: EAN 13 Add-on

SC 0 S

77889

1 122334 455666

Figure 15.1: Bar code sample labels (module 0.3)

15.3.2 Module 0.5

Code type 01: Interleaved 2 of 5

Modul 0,5

6677889900

Code type 02: Code 39

Modul 0,5

246BD

Code type 11: Codabar

Modul 0,5

A1511617A

Code 128

Modul 0,5

fghij

Code type 08: EAN 128

Modul 0,5

LEUZE

Code type 06: UPC-A

SC 4

0 98765 43219 8

Code type 07: EAN 8

SC 6

9876 5430

Code type 10: EAN 13 Add-on

SC 2

0 099887 766550 44332

Figure 15.2: Bar code sample labels (module 0.5)

Level 1 ▲▼ : selection	Level 2 ▲▼ : selection ESC : back	Level 3 ▲▼ : selection ESC : back	Level 4 ▲▼ : selection ESC : back	Level 5 ▲▼ : selection ESC : back	Selection/configuration option ▲▼ : selection ↵ : activate ESC : back	Detailed information on
Device information						page 93
Bar code reading window						page 89
Parameter ↵	Parameter handling	↵ Parameter enabling			OFF/ON	page 95
		↵ Parameters to default			All parameters are reset to their factory settings	
↵	Decoder table	↵ Max. no. of labels			Sets the number of labels to be decoded (0 … 64)	page 96
		↵ Decoder 1-4	↵ Symbology		Code type: no code / Code 2 of 5 Interleaved / Code 39 / Code 32 / Code UPC / Code EAN / Code 128 / EAN Addendum / Codabar / Code 93 / GS1 DataBar Omnidirectional / GS1 DataBar Limited / GS1 DataBar Expanded	
			↵ Number of digits	↵ Interval mode	OFF / ON to specify a range of permitted numbers of digits	
				↵ Digits 1-5	0 … 64 characters	
			↵ Reading reliability		2 … 100	
			↵ Check digit method		Check digit method used for decoding	
			↵ Check digit transm.		Check digit transmission different from standard / as required by the standard	
↵	Digital SWIO	↵ Sw. input/output 1-4	↵ I/O mode		Input / Output / Passive	page 99
			↵ Switching input	↵ Inverted	OFF / ON	
				↵ Debounce time	0 … 1000 ms	
				↵ Switch-on delay	0 … 65535 ms	
				↵ Pulse duration	0 … 65535 ms	
				↵ Switch-off delay	0 … 65535 ms	
				↵ Function	Function that is carried out after the switching input is activated	
			↵ Switching output	↵ Inverted	OFF / ON	
				↵ Start-up delay	0 … 65535 ms	
				↵ Pulse duration	0 … 65535 ms	
				↵ Activ. function 1-4	Specifies the event that activates the switching output	
				↵ Deactiv. function 1-4	Specifies the event that deactivates the switching output	
↵	Ethernet	↵ Ethernet interface	↵ IP address		Address of the BCL 548*i*	page 102
			↵ Gateway		Gateway for the BCL 548*i*	
			↵ Net mask		Net mask for the subnet of the BCL 548*i*	
			↵ DHCP activated		Off/On	
		↵ Host communication	↵ TCP/IP	↵ Activated	Off/On	
				↵ Mode	Server/client - mode of TCP/IP communication for the BCL 548*i*	
				↵ Keep alive interval	Monitoring of the communication of a network participant using a sign of life	

						TCP/IP client	Other host settings: IP-adr., port number, timeout, repetition time	
						TCP/IP server	Port number of the BCL 548*i* for TCP/IP queries	
					UDP	Activated	Off/On	
						IP address	of the host to which the data is to be transferred	
						Port number	of the host to which the data is to be transferred	
Language selection							Deutsch / English / Español / Français / Italiano	page 104
Service		Diagnostics					Number of readings, reading gates, reading rate / non-reading rate etc..	page 105
		Status messages					Exclusively for service purposes by Leuze electronic	
Actions		Start decoding	Stop decoding				Perform a single reading	page 105
		Start alignment	Stop alignment				Alignment aid (alignment mode)	
		Start auto-setup	Stop auto-setup				Automatic detection of code type and number of digits	
		Start teach-in	Stop teach-in				Teach-in of a reference code	
		Start code recognition	Stop code recognition				Teach-in of a reference code	