Leuze electronic

the sensor people

Reflectors

for the AMS optical laser measurement system

The detailed description regarding the reflectors is a integral part of all AMS 3xx*i* manuals. The corresponding PDF documents can be downloaded at www.leuze.com.

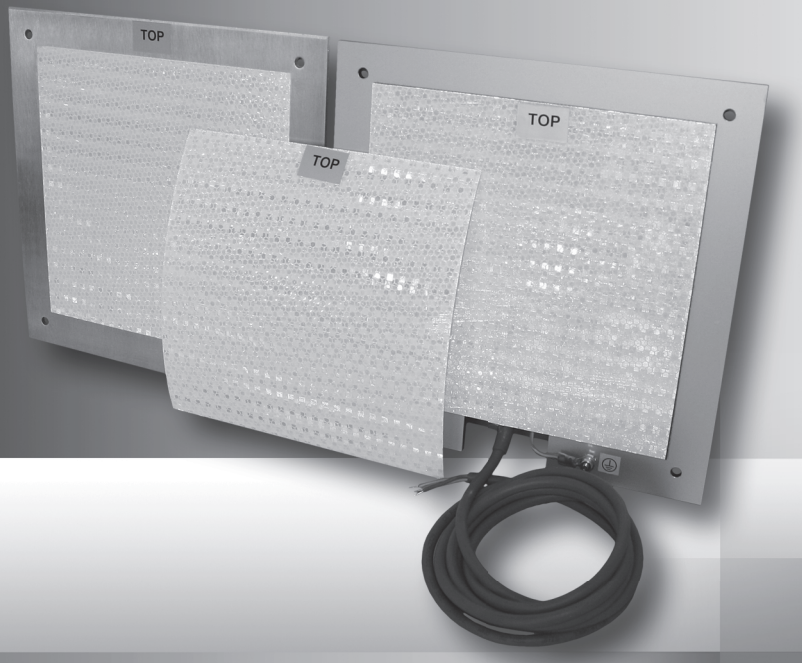

en 04-2016/04 50104727-01
We reserve the right to
make technical changes

Short Description

ПРОМЭЛЕКТРОНИКА / sales@prom-elec.com

1 Reflectors

1.1 General information

The AMS 3xx*i* measures distances against a reflective tape specified by Leuze electronic. All provided specifications for the AMS 3xx*i*, such as the operating range or accuracy, can only be achieved with the reflective tape specified by Leuze electronic.

The reflective tapes are available as adhesive tapes, affixed to a base plate and with an integrated heater especially for use at low temperatures. Reflective tapes with heating have the designation "**Reflective tape …x…-H**", where "**H**" is an abbreviation for the heating variant.

The reflective tapes/reflectors must be ordered separately. The choice of size is left to the user. In chapter 1.2.4, recommendations on reflector size are provided as a function of the distance that is to be measured. In any case, the user must check to determine whether the recommendation is suitable for the respective application.

1.2 Description of the reflective tape

The reflective tape consists of a white, microprism-based reflective material. The microprisms are protected with a highly transparent, hard protective layer.

Under certain circumstances, the protective layer may lead to surface reflections. When the reflective tape is slightly inclined, surface reflections have no effect on the measurement value. The inclination of the reflective tape/reflectors is described in chapter 1.3.2. The required pitch can be found in table 1.1 "Reflector pitch resulting from spacer sleeves" on page 7.

Type **-M** reflective tapes (reflective tape affixed to a base plate) are provided with a protective foil that can be easily pulled off. This must be removed from the reflector before the complete system is put into operation.

1.2.1 Specifications of the reflective tape

Self-adhesive reflective tapes

Reflective tape on a base plate

The reflective tape ("reflective tape …x…-**M**") is affixed to a base plate. Included with the base plate are spacers for positioning at an incline - for avoiding surface reflections - (see chapter 1.3.2 "Mounting the reflector").

Heated reflectors

The reflective tape ("reflective tape …x…**-H**") is affixed to a heated, thermally insulated base. The insulation results in a very high energetic efficiency.

Only the reflective tape is kept at the specified temperature by the integrated heater. Through the insulation on the back, the generated heat cannot be transferred via the steel construction. Energy costs are greatly reduced in the case of continuous heating.

	Part								
Type designation	**Self-adhesive tape Reflective tape …**			**Reflective tape on a base plate Reflective tape …**			**Heated reflectors Reflective tape …**		
	200x200-S	**500x500-S**	**914x914-S**	**200x200-M**	**500x500-M**	**914x914-M**	**200x200-H**	**500x500-H**	**914x914-H**
Part no.	50104361	50104362	50108988	50104364	50104365	50104366	50115020	50115021	50115022
Size of the reflective tape	200 x 200mm	500 x 500mm	914 x 914mm	200 x 200mm	500 x 500mm	914 x 914mm	200 x 200mm	500 x 500mm	914 x 914mm
Outer dimensions of the base material				250 x 250mm	550 x 550mm	964 x 964mm	250 x 250mm	550 x 550mm	964 x 964mm
Weight				1.2kg	2.8kg	25kg	0.5kg	2.5kg	12kg
Recommended application temperature for adhesive tape	+5°C … +25°C								
Temperature resistance, affixed	-40°C … +80°C								
Mounting surface	The mounting surface must be clean, dry and free of grease.								
Material properties							Supply line and heating foil contain silicone.		
Cutting the tape	Cut with a sharp tool, always on the side of the prism structure.								
Voltage supply							230VAC		
Power							100W	600W	1800W
Current consumption							~ 0.5A	~ 3A	~ 8A
Safety class							I		
Length of the supply line							2m		
Conductor cross section							3 x 0.75mm²		
Temperature control							Controlled heating with the following switch-on and switch-off temperatures, measured at the reflector surface.		
Switch-on temperature							~ 5°C		
Switch-off temperature							~ 20°C		
Operating temperature							-30°C … +70°C		
Storage temperature							-40°C … +80°C		
Air humidity	Max. 90%, non-condensing.								
Cleaning	Do not use any agents that act with a grinding effect. A conventional household detergent can be used as a cleaning agent. Rinse with clear water and dry the surface.								
Storing the reflector	Store in a cool and dry place.								

1.2.2 Dimensioned drawing of reflective tape on a base plate

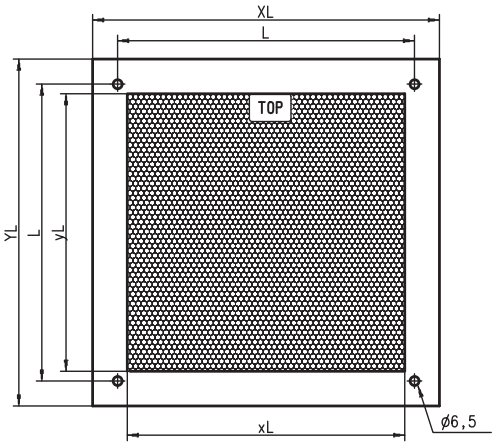

Always align the **TOP** marking with the AMS connections! (chapter 1.3.2)

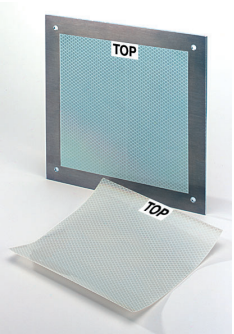

Figure 1.1: Dimensioned drawing of reflectors

Part	Reflective tape (mm)		Reflector plate (mm)		
	xL	yL	XL	YL	L
Reflective tape 200x200-M	200	200	250	250	214
Reflective tape 500x500-M	500	500	550	550	514
Reflective tape 914x914-M	914	914	964	964	928

1.2.3 Dimensioned drawing of heated reflectors

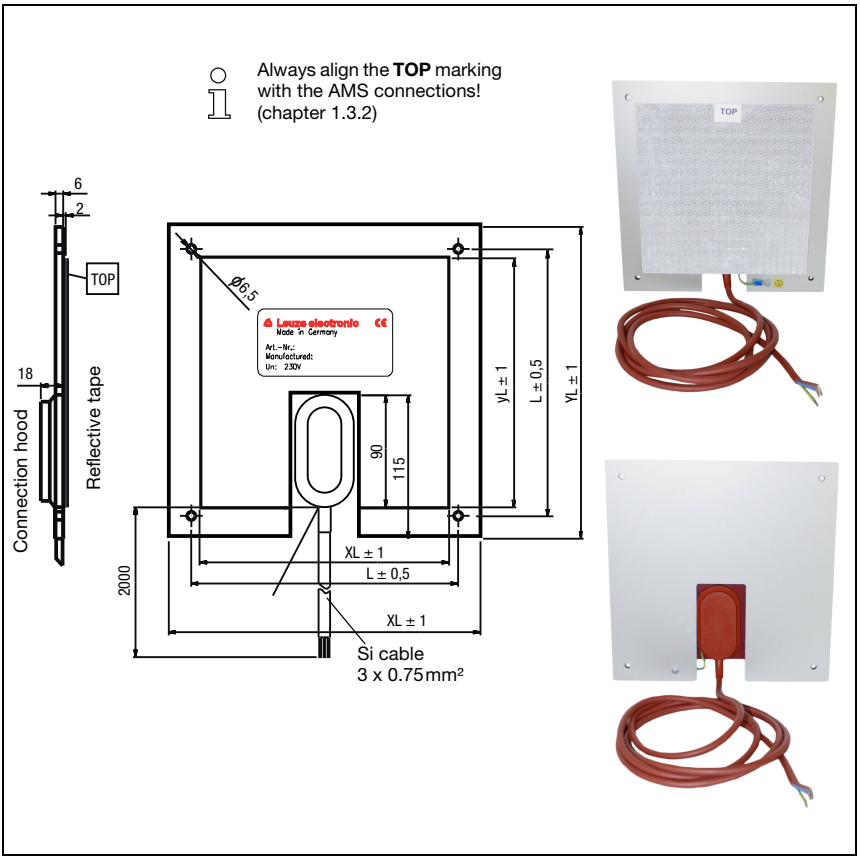

Figure 1.2: Dimensioned drawing of heated reflectors

Part	Reflective tape (mm)		Insulated base plate (mm)		
	xL	yL	XL	YL	L
Reflective tape 200x200-H	200	200	250	250	214
Reflective tape 500x500-H	500	500	550	550	514
Reflective tape 914x914-H	914	914	964	964	928

1.2.4 Overview/recommended reflector sizes

The selection of the reflector/reflective tape size is left to the user. In any case, the user must check to determine whether the recommended reflector size is suitable for the respective application.

Recommended reflector sizes			
AMS 3xx*i* selection (Operating range in m)	**Recommended reflector size (H x W)**	**Type designation …-S = Self-adhesive …-M = base plate …-H = heating**	**Part no.**
AMS 3xx*i* 40 (**max. 40m**)	200x200mm	Reflective tape 200x200-S Reflective tape 200x200-M Reflective tape 200x200-H	50104361 50104364 50115020
AMS 3xx*i* 120 (**max. 120m**)	500x500mm	Reflective tape 500x500-S Reflective tape 500x500-M Reflective tape 500x500-H	50104362 50104365 50115021
AMS 3xx*i* 200 (**max. 200m**)	749x914mm 914x914mm	Reflective tape 749x914-S Reflective tape 914x914-M Reflective tape 914x914-S Reflective tape 914x914-H	50104363 50104366 50108988 50115022
AMS 3xx*i* 300 (**max. 300m**)	749x914mm 914x914mm	Reflective tape 749x914-S Reflective tape 914x914-M Reflective tape 914x914-S Reflective tape 914x914-H	50104363 50104366 50108988 50115022

1.3 Mounting the reflector

1.3.1 General information

Self-adhesive reflective tapes

The reflective tapes of the "Reflective tape …x…**-S**" self-adhesive series must be affixed to a flat, clean and grease-free surface. We recommend using a separate metal plate, which is to be provided on-site.

As described in table 1.1, the reflective tape must be angled.

Reflective tapes on base plate

The reflective tapes of the "Reflective tape …x…**-M**" series are provided with corresponding mounting holes. Spacer sleeves are provided in the packet for achieving the necessary pitch angle. For further information see table 1.1.

Heated reflectors

The reflective tapes of the "Reflective tape ...x...**-H**" series are provided with corresponding mounting holes. Due to the voltage supply affixed on the rear, the reflector cannot be mounted flat. Included in the package are four distance sleeves in two different lengths. Use the distance sleeves to achieve a base separation to the wall as well as the necessary pitch for avoiding surface reflection. For further information see table 1.1.

The reflector is provided with a 2m-long connection cable for supplying with 230VAC. Connect the cable to the closest power outlet. Observe the current consumptions and the conductor cross section listed in the specifications.

Attention!

The connector units must be carried out by a certified electrician.

1.3.2 Mounting the reflector

The combination of laser measurement system and reflective tape/reflector is mounted so that the laser light spot hits the tape as centered as possible and without interruption.

For this purpose, use the alignment elements provided on the AMS 3xx*i*. Remove the protective foil from the reflector with designation **-M** (reflective tape on base plate).

Attention!

The "TOP" label mounted on the reflectors should be aligned the same as the connections of the AMS 3xx*i*.

Example:

*If the AMS 3xx**i** is mounted so that the M12 connections are on the top, the "TOP" label of the reflector is also on the top. If the AMS 3xx**i** is mounted so that the M12 connections are on the side, the "TOP" label of the reflector is also on the side.*

Notice!

*The reflector must be angled. To do this, use the spacer sleeves. Angle the reflectors so that the **surface reflections of the foil seal are deflected to the left, right or upwards**. The following table gives the correct pitch with respect to the reflector size and, thus, the length of the spacers.*

Table of reflector pitches

Reflector type	Pitch resulting from spacer sleeves [1]	
Reflective tape 200x200-S Reflective tape 200x200-M	**2 x 5mm**	
Reflective tape 200x200-H	**2 x 15mm**	**2 x 20mm**
Reflective tape 500x500-S Reflective tape 500x500-M	**2 x 10mm**	
Reflective tape 500x500-H	**2 x 15mm**	**2 x 25mm**
Reflective tape 749x914-S	**2 x 20mm**	
Reflective tape 914x914-S Reflective tape 914x914-M	**2 x 20mm**	
Reflective tape 914x914-H	**2 x 15mm**	**2 x 35mm**

1) Spacer sleeves are included in the delivery contents of reflective tape …-**M** and …-**H**

Table 1.1: Reflector pitch resulting from spacer sleeves

Notice!

*Reliable function of the AMS 3xx**i** and, thus, max. operating range and accuracy can only be achieved with the reflective tape specified by Leuze electronic. No function can be guaranteed if other reflectors are used!*

Reflective tapes …-S and …-M

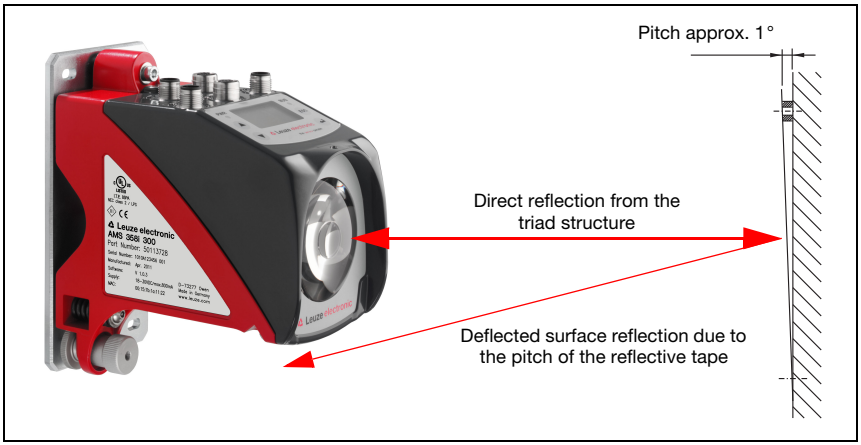

Figure 1.3: Reflector mounting

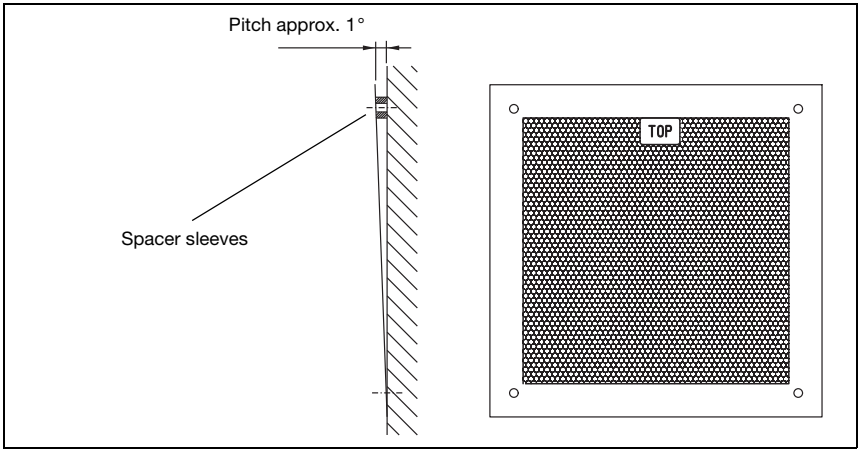

Figure 1.4: Pitch of the reflector

ПРОМЭЛЕКТРОНИКА / sales@prom-elec.com

Reflective tapes ...-H

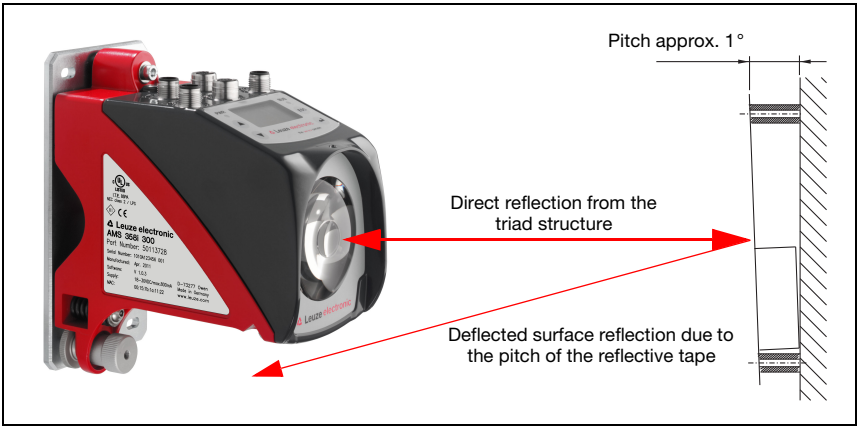

Figure 1.5: Mounting of heated reflectors

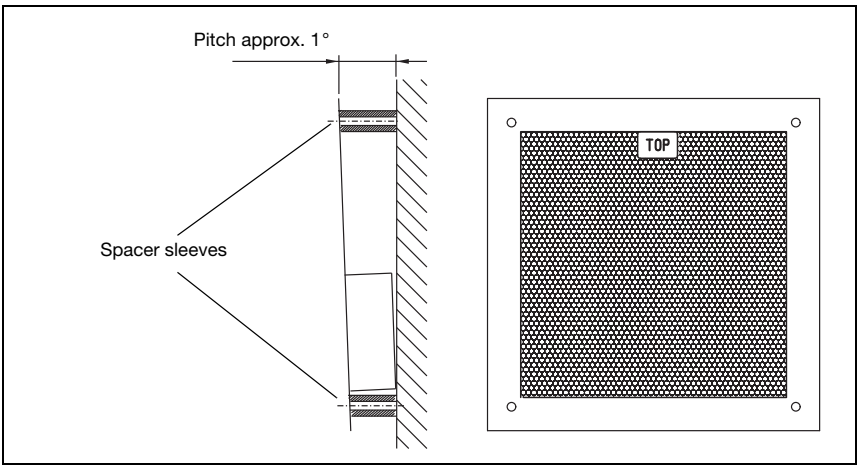

Figure 1.6: Pitch of the heated reflector