MMD-TA-11B and MMD-TA-12B Muting Module

Original Instructions
p/n: 116390 Rev. E
20-Nov-25
© Banner Engineering Corp. All rights reserved. www.bannerengineering.com

ПРОМЭЛЕКТРОНИКА/ sales@prom-elec.com

Contents

Chapter 1 About This Document 5
1.1 Important... Read This Before Proceeding! 5
1.2 Use of Warnings and Cautions 5

Chapter 2 Introduction 6
2.1 Muting Module 6
2.2 Functional Overview 6
2.2.1 Operating Status LEDs and Diagnostic Display 7
2.2.2 Automatic or Monitored Manual Reset Select 8
2.2.3 Lockout Conditions-Muting Module 9
2.2.4 Control Reliability: Redundancy and Self-Checking 9
2.2.5 Muteable Safety Stop Interface (MSSI) 9
2.2.6 Safety (Protective) Stop Interface (SSI) 9
2.2.7 Output Signal Switching Device (OSSD) Outputs 9
2.2.8 Auxiliary Output (Aux) 10
2.2.9 External Device Monitoring (EDM) 10
2.2.10 Mute Inputs (M1–M4) and Mute Devices 10
2.2.11 Mute Enable (ME) 11
2.2.12 Mute Lamp Output (ML) 11
2.2.13 Backdoor Timer 11
2.2.14 Mute on Power-Up 12
2.2.15 Override 12
2.2.16 One-Way/Two-Way Muting 13
2.3 Designated and Qualified Persons 13

Chapter 3 Specifications 14
3.1 **Model MMD-TA-11B** 15
3.2 **Model MMD-TA-12B** 16
3.3 Dimensions 17

Chapter 4 System Installation 18
4.1 Appropriate Application 18
4.2 **Important...Read this Before Proceeding!** 18
4.3 Muting Application Design 19
4.4 Use of Corner Mirrors with Optical Safety Systems 19
4.5 Multiple Presence-Sensing Safety Devices (PSSDs) 20
4.6 Pass-Through Hazards 20
4.6.1 Reducing or Eliminating Pass-Through Hazards 20
4.7 Installing the Module 21
4.8 Muting Module Configuration 21
4.9 Connection Terminals and Functions 22
4.9.1 Remove a Terminal Block 24
4.10 Installing Input Devices 25
4.10.1 Manual Reset Switch 25
4.10.2 Muting Devices 25
4.11 Mute Lamp Output (ML) 28
4.12 Auxiliary Output (AUX) 28
4.13 Override Switch Wiring 29
4.14 SSI and MSSI Interfacing 29
4.15 Safety Circuit Integrity and ISO 13849-1 30
4.15.1 Safety Circuit Integrity and ISO 13849-1 Safety Circuit Principles 30
4.15.2 Safety Circuit Integrity Levels 30
4.15.3 Fault Exclusion 30
4.16 Generic SSI and MSSI Wiring 31
4.16.1 Category 2 31
4.16.2 Category 3 31
4.16.3 Category 4 32
4.17 SSI Emergency Stop Switch Device Wiring 33
4.17.1 Emergency Stop Push Button Switches 33
4.17.2 Safety Circuit Integrity Levels and Emergency Stop Functions 34
4.17.3 Category 2 34
4.17.4 Category 3 35
4.17.5 Category 4 36
4.18 SSI/MSSI Interlocked Guard or Gate Wiring 36
4.18.1 Safety Circuit Integrity Levels 36
4.18.2 Safety Interlock Switch Requirements 36

© Banner Engineering Corp. All rights reserved. www.bannerengineering.com

4.18.3 Positive-Opening Safety Interlocking Switches 37
4.18.4 Monitoring Series-Connected Safety Interlock Switches 37
4.18.5 Category 2 38
4.18.6 Category 3 38
4.18.7 Category 4 39
4.19 SSI Supplemental Safety System Wiring 39

Chapter 5 Machine Interface - Initial Wiring and Checkout 42
5.1 Verifying System Operation 42
5.2 Temporary Power and Initial Checkout 42

Chapter 6 Permanent Wiring to the Guarded Machine 45
6.1 Mute Enable Wiring 50
6.2 External Device Monitoring (EDM) Wiring 50
6.3 Output Signal Switching Device (OSSD) Output Connections 51
6.4 FSD Interfacing Connections 52
6.5 Safety (Protective) Stop Circuits 52
6.6 Commissioning Checkout 52

Chapter 7 Operating Instructions 54
7.1 Security Protocol 54
7.2 Periodic Checkout Requirements 54
7.3 Normal Operation 54

Chapter 8 Troubleshooting 56
8.1 Troubleshooting Lockout Conditions 56
8.2 Diagnostic Display 56
8.3 Effects of Electrical Noise 56
8.4 Troubleshooting Conditions, using the Module's Diagnostic Display 56

Chapter 9 Periodic Checkout Procedure 59
9.1 Schedule of Checkouts 59
9.2 Commissioning Checkout 60
9.2.1 Safeguarding Checkout 60
9.2.2 Muting Checkout 61
9.3 Daily Checkout 62
9.4 Semi-Annual Checkout 62

Chapter 10 Mute Timing Sequences 64
10.1 Muting Sequence with Two Muting Devices 64
10.2 DIP Switch Configuration(1) 64
10.3 Muting Sequence with Four Muting Devices 65
10.4 **DIP Switch Configuration**(2) 65

Chapter 11 Typical Muting Applications 67
11.1 Entry/Exit Applications-Muting Modules 67
11.2 Home or Station Applications 69
11.3 Robot Load/Unload Station Application 70
11.4 Turret Table Application 70
11.5 Power Press Applications 71

Chapter 12 Accessories 73
12.1 Solid-State LED-Based Mute Lamp 73
12.2 Interface Modules 73
12.2.1 Mechanically Linked Contactors 73

Chapter 13 Product Support and Maintenance 74
13.1 Repairs-Muting Module 74
13.2 Banner Engineering Corp Limited Warranty 74
13.3 Contact Us 74

(1) Both DIP switch banks A and B.
(2) Both DIT switch banks A and B.

© Banner Engineering Corp. All rights reserved. www.bannerengineering.com

Chapter 14 Standards and Regulations 75
14.1 U.S. Application Standards 75
14.2 OSHA Regulations 75
14.3 International/European Standards 76

Index 77

© Banner Engineering Corp. All rights reserved. www.bannerengineering.com

Chapter Contents

1.1 Important... Read This Before Proceeding! 5
1.2 Use of Warnings and Cautions 5

Chapter 1 About This Document

1.1 Important... Read This Before Proceeding!

It is the responsibility of the machine designer, controls engineer, machine builder, machine operator, and/or maintenance personnel or electrician to apply and maintain this device in full compliance with all applicable regulations and standards. The device can provide the required safeguarding function only if it is properly installed, properly operated, and properly maintained. This manual attempts to provide complete installation, operation, and maintenance instructions. *Reading the manual in its entirety is highly recommended to ensure proper understanding of the operation, installation, and maintenance.* Please direct any questions regarding the application or use of the device to Banner Engineering Corp..

For more information regarding U.S. and international institutions that provide safeguarding application and safeguarding device performance standards, see "Standards and Regulations" on page 75.

WARNING:

- The user is responsible for following these instructions.
- **Failure to follow any of these responsibilities may potentially create a dangerous condition that could result in serious injury or death.**
- Carefully read, understand, and comply with all instructions for this device.
- Perform a risk assessment that includes the specific machine guarding application. Guidance on a compliant methodology can be found in ISO 12100 or ANSI B11.0.
- Determine what safeguarding devices and methods are appropriate per the results of the risk assessment and implement per all applicable local, state, and national codes and regulations. See ISO 13849-1, ANSI B11.19, and/or other appropriate standards.
- Verify that the entire safeguarding system (including input devices, control systems, and output devices) is properly configured and installed, operational, and working as intended for the application.
- Periodically re-verify, as needed, that the entire safeguarding system is working as intended for the application.

1.2 Use of Warnings and Cautions

The precautions and statements used throughout this document are indicated by alert symbols and must be followed for the safe use of the MMD-TA-11B/MMD-TA-12B Muting Module . Failure to follow all precautions and alerts may result in unsafe use or operation. The following signal words and alert symbols are defined as follows:

Signal Word and Symbol	Definition
WARNING:	**Warnings** refer to potentially hazardous situations which, if not avoided, could result in serious injury or death.
CAUTION:	**Cautions** refer to potentially hazardous situations which, if not avoided, could result in minor or moderate injury.

These statements are intended to inform the machine designer and manufacturer, the end user, and maintenance personnel, how to avoid misapplication and effectively apply the MMD-TA-11B/MMD-TA-12B Muting Module to meet the various safeguarding application requirements. These individuals are responsible to read and abide by these statements.

© Banner Engineering Corp. All rights reserved.
www.bannerengineering.com

Chapter Contents

2.1 Muting Module 6
2.2 Functional Overview 6
2.3 Designated and Qualified Persons 13

Chapter 2 Introduction

2.1 Muting Module



- Compact, 67.5 mm (2.7 in) DIN-mounted housing with plug-in terminal blocks
- For use with Output Signal Switching Device (OSSD) outputs, such as the outputs of the various families of EZ-SCREEN® light curtain and safety laser scanner, or other safety devices with hard relay contact safety outputs, or +24 V dc (PNP) outputs.
- Monitors two or four inputs to automatically suspend the safety function of a safeguarding device
- Can be used as a dual controller when muting function is not used
- Safety (protective) Stop Interface (SSI) for connection of supplemental safeguarding devices, E-stops, or other devices
- Category 2, 3, or 4 wiring per ISO 13849-1/-2
- Selectable external device monitoring (EDM)
- Selectable Automatic or Monitored Manual Reset provides flexibility for point-of-operation, area, or perimeter guarding
- Two normally open (N.O.) safety contacts (model MMD-TA-11B) or diverse-redundant solid-state safety outputs (model MMD-TA-12B)
- Status LEDs and two-digit Diagnostic Display indicate module status
- Easy configuration for:
    - Auto/manual reset
    - One-/two-channel EDM
    - One-/two-direction muting
    - Selectable mute enable
    - Monitored/non-monitored mute lamp
    - Selectable backdoor timer
    - Selectable mute on power-up

2.2 Functional Overview

The Banner MMD-TA-11B / MMD-TA-12B Muting Module (the Module) is an accessory component of a safeguarding system, which may incorporate such primary safeguards as safety light screens, safety interlocked gates/guards, or other presence-sensing safeguarding devices (PSSDs). The Muting Module monitor the redundant mute device inputs and automatically suspend the safeguarding function of a device during the non-hazardous portion of the machine cycle.

In this manual, the term *muting* refers to the automatic suspension of the safeguarding function of the primary safety device during a non-hazardous portion of the machine cycle where personnel are not exposed to harm.

The muting function allows material to be manually or automatically fed into or removed from a machine process, without tripping the primary safety device. The Muting Module accomplishes this by using redundant microprocessors that monitor the status of inputs and outputs, so that a single fault will cause the receiver to issue a stop command to the machine. The Muting Module, like all Banner safety products, is extensively Failure Mode and Effects Analysis (FMEA) tested to establish an extremely high degree of confidence that no internal component will, even if it does fail, cause a failure to danger. This design philosophy aids machine designers to comply with U.S. control reliability and worldwide standards for the highest level of safety.

© Banner Engineering Corp. All rights reserved.
www.bannerengineering.com

Figure 1. Block diagram of a safeguarding system employing the Muting Module and a safety light screen (user-supplied) as a primary safety device

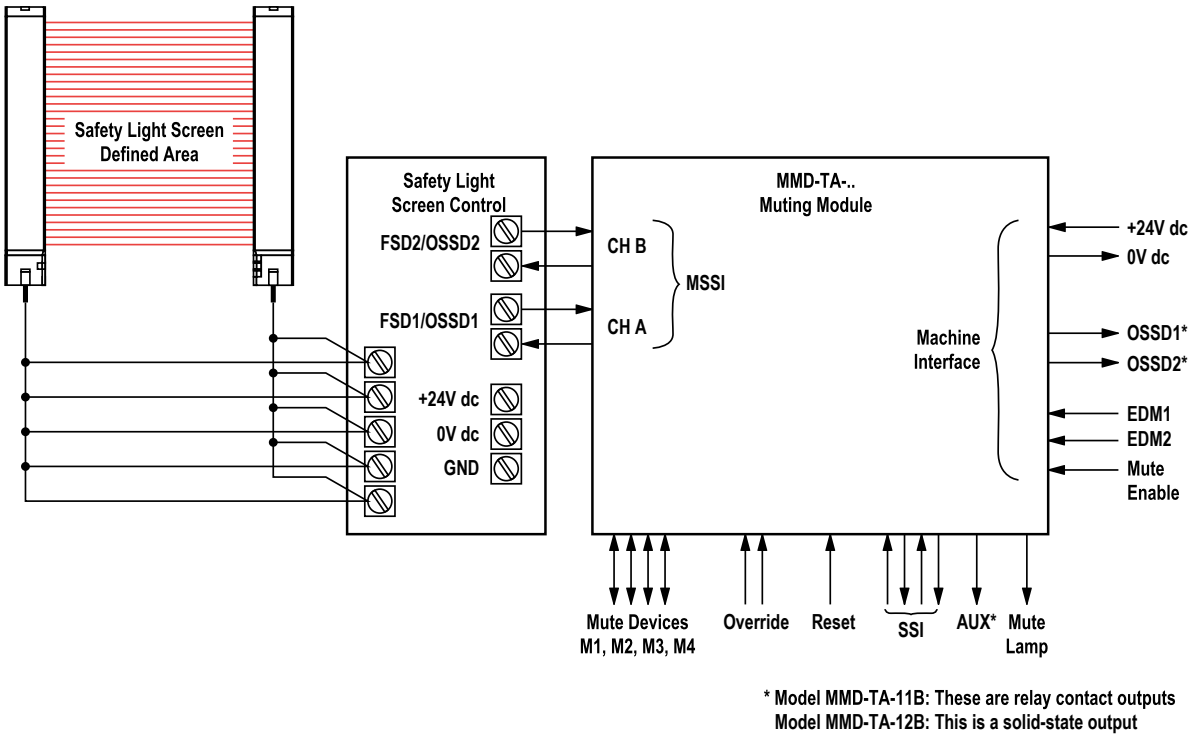

Individual features discussed in the following sections are:

- Operating status LEDs and diagnostic display
- Auto/manual reset
- Lockout conditions
- Control reliability
- Mutable Safety Stop Interface (MSSI)
- Safety Stop Interface (SSI)
- Output Signal Switching Device (OSSD) outputs
- Auxiliary (AUX) output
- External device monitoring (EDM)
- Mute devices and mute inputs (M1−M4)
- Mute enable input (ME)
- Mute lamp output (ML)
- Backdoor timer
- Mute on power-up
- Override
- One-way/two-way muting

2.2.1 Operating Status LEDs and Diagnostic Display

The Module has three Operating Status LEDs (one each red, amber, and green), plus a 2-digit Diagnostic Display, visible through a window in the front cover.

The individual LEDs provide constant, ongoing system status information at a glance. The Diagnostic Display provides error codes that correspond to the cause of a fault or configuration error which results in a lockout, and other more detailed conditions. See "Operating Instructions " on page 54 and "Troubleshooting" on page 56 for further information.

© Banner Engineering Corp. All rights reserved.
www.bannerengineering.com

Figure 2. Muting Module features

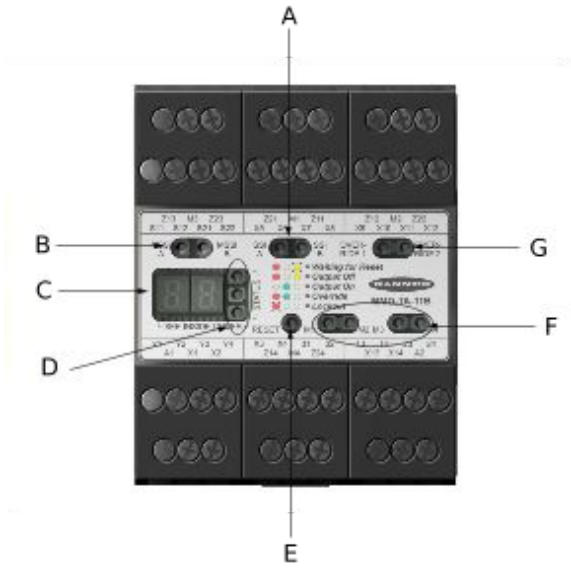

Key	Description
A	Safety Stop Inputs (SSI) Active LEDs (green)
B	Muteable Safety Stop Input(s) (MSSI) Active LEDs (green)
C	2-Digit Diagnostic Display
D	Red, Green, Amber Status LEDs
E	Reset Input (green)
F	Muting Devices Status LEDs (amber)
G	Override Active LEDs (amber)

NOTE: A green or amber indicator is provided for each input to verify an active state. A green indicator is provided for the Reset Input and for MSSI and SSI inputs. An amber indicator is provided for each of the mute device (M1–M4) and override inputs.

2.2.2 Automatic or Monitored Manual Reset Select

The selectable Automatic or Monitored Manual Reset (X1−X2) provides flexibility for the user who has applications in which the operator is continually sensed, or in applications where the operator can pass through and become clear of the sensing field (see " Pass-Through Hazards-Muting Module" on page 20) or other applications requiring a manual reset.

The configuration is selected via two banks of DIP switches located under the Module's front cover.

Monitored Manual Reset

Manual Reset is typically used in situations where the individual can pass through a sensing field and become clear of a safeguarding device, such that the device can no longer prevent hazardous motion (for example, perimeter guarding). The Module monitors the input for two transitions: from open-to-closed, and from closed-to-open within a certain time period. This prevents the reset button from being tied down or failing in a closed condition and causing an unintended or automatic reset.

Upon power-up, when the Module has been configured for manual reset, for the Output Signal Switching Device (OSSD) outputs to turn ON, both the Muteable Safety Stop Interface (MSSI) and the Safety (Protective) Stop Interface (SSI) must be active (closed) and a monitored manual reset must be accomplished. The reset is accomplished by closing the Reset input for a minimum of 1/4 second, but not longer than 2 seconds and then re-opening the input. The OSSD outputs will turn ON once the open-closed-open action occurs.

In this configuration, the Module must be manually reset after power-up, lockouts, and after the cycling of either the MSSI (not muted) or the SSI. The location for the manual reset device (for example, a normally open key switch) must comply with the warning in "Manual Reset Switch-Muting Module" on page 25 and refer to that section for further information on key resets.

Automatic Reset

Upon power-up, when the Module is configured for automatic reset, the Output Signal Switching Device (OSSD) outputs will automatically turn ON once power is applied, the self-test is accomplished, and the Muteable Safety Stop Interface (MSSI) and the Safety (Protective) Stop Interface (SSI) are active (closed). The OSSD outputs will also turn ON after either interface is de-activated and then re-activated. In either case, no external input or reset is required.

Automatic reset is typically used in situations where the individual is continually sensed by the defined area or in situations where supplemental safeguards prevent the initiation of hazardous motion while an individual is within the safeguarded space (for example, point-of-operation guarding).

In either case, a manual reset must be performed to recover from a lockout condition.

© Banner Engineering Corp. All rights reserved.
www.bannerengineering.com

In Automatic Reset mode, input X1−X2 stays open.

2.2.3 Lockout Conditions-Muting Module

A lockout condition of the Module will cause both Output Signal Switching Device (OSSD) outputs to go OFF. A lockout condition is indicated by a flashing Red status indicator and an error number displayed on the Diagnostic Display.

A description of possible lockouts, their causes, troubleshooting hints, and a Manual Reset routine are listed in "Troubleshooting" on page 56.

2.2.4 Control Reliability: Redundancy and Self-Checking

Redundancy requires that Module circuit components be backed up to the extent that, if the failure of a single component will prevent effective machine stopping action when needed, that component must have a redundant counterpart which will perform the same function. The microprocessor-controlled Muting Module is designed with diverse redundancy. Diverse-redundant components are of different designs, and microprocessor programs used by them run from different instruction sets.

Redundancy must be maintained for as long as the Muting Module is in operation. Since a redundant system is no longer redundant once a component has failed, the Module is designed to be continuously self-checking. A component failure detected by or within the self-checking system causes a stop signal to be sent to the guarded machine and puts the Module into a lockout condition.

Recovery from this type of lockout condition requires replacement of the failed component (to restore redundancy) and the appropriate reset procedure (see "Manual Reset Switch-Muting Module" on page 25). Possible causes are listed in "Troubleshooting" on page 56. The Diagnostic Display is used to diagnose causes of a lockout condition.

2.2.5 Muteable Safety Stop Interface (MSSI)

The Muteable Safety Stop Interface (MSSI) input (S11−S12, S21−S22) is a specialized Safety (Protective) Stop Interface (SSI) that can be muted during the non-hazardous portion of the machine cycle.

The Module requires redundant input signals from the external primary safeguard which is to be muted. These inputs typically are either two solid-state safety outputs or two monitored forced-guided relay outputs from an appropriate safety device. For complete information, see "Specifications" on page 14 and "SSI and MSSI Interfacing" on page 29.

WARNING:

- **Emergency Stop Functions**
- Muting or bypassing the safety outputs will render the Emergency Stop function ineffective.
- Do not connect any Emergency Stop devices to the MSSI Input; do not mute or bypass any Emergency Stop device. NFPA79 and IEC/EN 60204-1 require that the Emergency Stop function remain active at all times.

2.2.6 Safety (Protective) Stop Interface (SSI)

The Module has a provision for an additional Safety (Protective) Stop Interface (X5−X6, X7−X8) to connect an optional device, such as a supplemental safeguard, E-stop button, or safety switch(es), to issue a stop command. This dual-channel interface is similar to the Muteable Safety Stop Interface (MSSI), but is always functional, even when the primary safety device is being muted. For complete information, see "Specifications" on page 14 and "SSI and MSSI Interfacing" on page 29.

2.2.7 Output Signal Switching Device (OSSD) Outputs

Model MMD-TA-12B has two solid-state safety outputs (Y5−Y6, Y7−Y8); and model MMD-TA-11B has two normally open hard-contact safety outputs (13−14, 23−24), labeled “OSSD1” and “OSSD2” (see "Figure: Block diagram of a safeguarding system employing the Muting Module and a safety light screen (user-supplied) as a primary safety device" on page 7). The solid-state safety outputs are actively monitored to detect short circuits to the supply voltage, to each other, and to other sources of electrical energy. If a failure is detected, the outputs will switch to an OFF-state. For circuits requiring the highest level of safety and reliability, either OSSD must be capable of stopping the motion of the guarded machine in an emergency.

During the muted portion of the machine cycle, the Muteable Safety Stop Interface (MSSI) inputs will be ignored and OSSD1 and OSSD2 will remain ON. During other portions (not muted) of the cycle, if the MSSI either open or go OFF, OSSD1 and OSSD2 will go OFF.

In any case, if the Safety (Protective) Stop Interface (SSI) interface opens, OSSD1 and OSSD2 will go OFF. See "Mute Timing Sequences" on page 64 for timing diagrams.

© Banner Engineering Corp. All rights reserved.
www.bannerengineering.com

2.2.8 Auxiliary Output (Aux)

The Auxiliary (Aux) monitoring PNP (Z3−Z4) output on the MMD-TA-12B and the parallel N.C. contact output on the -11B are intended for non-safety related purposes. The status of this auxiliary output is indicated by the green Status LED. See "Auxiliary Output (AUX)" on page 28 for more information.

2.2.9 External Device Monitoring (EDM)

Two inputs are provided for monitoring the state of external devices, such as MPCEs. These terminals are labeled “EDM1” (Y1−Y2) and “EDM2” (Y3−Y4). The Module’s EDM inputs can be configured in three ways: one-channel, two-channel, or no monitoring. One- and two-channel EDM are used when the Output Signal Switching Device (OSSD) outputs directly control the de-energizing of the MPCEs or external devices.

- One-Channel Monitoring: a series connection of closed monitor contacts that are forced-guided (mechanically linked) from each device controlled by the Muting Module. The monitor contacts must be closed before the Module can be reset (either Manual or Automatic). After a reset is executed and the safety outputs (OSSDs) are closed, the status of the monitor contacts is no longer monitored. However, the monitor contacts must be closed within 200 milliseconds of the OSSD outputs going from ON to OFF.
- Two-Channel Monitoring: an independent connection of closed monitor contacts that are forced-guided (mechanically linked) from each device controlled by the Muting Module. Both EDM inputs must be closed before the Module can be reset and the OSSDs can turn ON. While the OSSDs are ON, the inputs may change state (either both open, or both closed). If the inputs remain in opposite states for more than 200 milliseconds, a lockout will occur. Additionally, both inputs must be closed 200 milliseconds after the OSSD outputs go OFF, or a lockout will occur.
- No Monitoring: If no monitoring is desired, the 1-ch/2-ch selection switches must be configured for two-channel EDM, and Y1 must be jumpered to Y3. If the Module is set for No Monitoring, the user must ensure that any single failure of the external devices does not result in a hazardous condition and a successive machine cycle will be prevented (see " Control Reliability: Redundancy and Self-Checking-Muting Module" on page 9).

2.2.10 Mute Inputs (M1–M4) and Mute Devices

Muting Function

To mute the primary safeguard appropriately, the design of a muting system must:

1. Identify the non-hazardous portion of the machine cycle.
2. Select the proper muting devices.
3. Include proper mounting and installation of those devices.

The Module can monitor and respond to redundant signals that initiate the mute (M1: Z11–Z21; M2: Z12–Z22; M3: Z13–Z23; M4: Z14–Z24). The mute then suspends the safeguarding function by ignoring the state of the Muteable Safety Stop Interface (MSSI). This allows a person to interrupt the defined area to load and/or unload parts or an object to pass through the defined area of a safety light screen, without generating a stop command. (This should not be confused with blanking, which disables one or more beams in a safety light screen, resulting in larger resolution.) See "Mute Timing Sequences" on page 64 for example mute timing sequences.

The mute may be triggered by a variety of external devices. This feature provides a variety of options to tailor the System to the requirements of a specific application.

A pair of muting devices must be triggered simultaneously (within 3 seconds of one another). This reduces the chance of common mode failures or defeat.

WARNING:

- **Muting is allowed only during the non-hazardous portion of the machine cycle**
- Failure to follow these instructions could result in serious injury or death.
- Design the muting application so that no single component failure can prevent the stop command or allow subsequent machine cycles until the failure is corrected (per ISO 13849-1 and ANSI B11.19).

WARNING:

- **Muting inputs must be redundant**
- A single device, with multiple outputs, can fail so that the system is muted at an inappropriate time, causing a hazardous situation.
- Do not use a single switch, device, or relay with two normally open contacts for the mute inputs.

© Banner Engineering Corp. All rights reserved.
www.bannerengineering.com

Mute Devices

The beginning and end of a mute cycle must be triggered by outputs from either pair of muting devices, depending on the application. The mute device pairs both must have normally open contacts, or have one device with a PNP output and one device with an NPN output, both of which fulfill the muting device requirements in "Specifications" on page 14 and "Mute Devices" on page 11. These contacts must close (conduct) when the switch is actuated to initiate the mute, and must open (non-conducting) when the switch is not actuated and in a power-OFF condition.

The Module monitors the mute devices to verify that their outputs turn ON within 3 seconds of each other. If the inputs do not meet this simultaneity requirement, a mute condition cannot occur.

Several types and combinations of mute devices can be used, including, but not limited to: limit switches, photoelectric sensors, positive-driven safety switches, inductive proximity sensors, and whisker switches.

2.2.11 Mute Enable (ME)

The Mute Enable input (X13−X14) is a non-safety-rated input.

When the input is closed (terminals X13−X14 jumpered), the Module will allow a mute condition to occur; opening this input while the System is muted will have no effect. The Module is factory-supplied with a jumper installed between terminals X13−X14. To use the Mute Enable function, remove the jumper.

Typical uses for Mute Enable include:

- Allow the machine control logic to create a window for muting to begin
- Inhibit muting from occurring
- Reduce the chance of unauthorized or unintended bypassing or defeat of the safety system

Simultaneity Timer Reset Function

The Mute Enable (ME) input can also be used to reset the simultaneity timer of the mute inputs. If one input is active for longer than three seconds before the second input becomes active, the simultaneity timer will prevent a mute cycle from occurring. This could be due to a normal stoppage of an assembly line that may result in blocking one mute device and the simultaneity time running out.

If the ME input is cycled (closed-open-closed) while one mute input is active, the simultaneity timer is reset, and if the second mute input becomes active within three seconds, a normal mute cycle begins. The timing requirement for the closed-open-closed is similar to the manual reset function. Initially, the input needs to be active (closed) for longer than 1/4 second, then open for longer than 1/4 second, but not longer than 2 seconds, and then must re-close to reset the simultaneity timer. The function can reset the timer only once per mute cycle (that is, all mute inputs M1−M4 must open before another reset can occur).

2.2.12 Mute Lamp Output (ML)

Some applications require that a lamp (or other means) be used to indicate when the safety device (for example, light screen) is muted; the module provides for this (X3−X4; see Caution below). This indication is selectable between a monitored or a non-monitored output signal (NPN sinking). The monitored output will prevent the initiation of a mute after an indicator failure is detected (current draw falls below 10 mA or goes above 360 mA). If the application requires compliance with UL 61496, Lamp Monitoring must be selected and the lamp used must meet applicable requirements (see "Mute Lamp Output (ML)-MM" on page 28).

CAUTION:

- **Mute status must be readily observed**
- Failure of the mute indicator should be detectable from the location of the muted device and prevent the next mute.
- Verify the indicator's operation at suitable intervals. Provide easily observed indication that the safety device is muted. Select lamp monitoring if the application requires compliance with UL 61496.

2.2.13 Backdoor Timer

The Backdoor Timer allows the user to select a maximum period of time that muting is allowed to occur. This feature hinders the intentional defeat of the muting devices to initiate an inappropriate mute. It is also useful for detecting a common mode failure that would affect all mute devices in the application.

The timer begins when the second muting device makes the simultaneity requirement (within 3 seconds of the first device), and will allow a mute to continue for the predetermined time. After the timer expires, the mute ends – no matter what the

© Banner Engineering Corp. All rights reserved.
www.bannerengineering.com

signals from the mute devices indicate. If the Muteable Safety Stop Interface (MSSI) is open, the Output Signal Switching Device (OSSD) outputs will turn OFF and must be manually reset (if the Module is configured for Manual Reset). The Override function can be activated to force the OSSDs ON to clear the obstruction.

If the Backdoor Timer expires, a #50 error code will be displayed until all mute device inputs are open and the MSSI is active (closed).

The Backdoor Timer can be disabled (that is, set for infinite time). See "Figure: Muting Module manual configuration parameters " on page 22 and configure DIP switches #5 and #6 for Backdoor Time-Out ON.

WARNING:
- **Mute Time Limit**
- Select an infinite time for the mute time limit (disabling) only if the possibility of an inappropriate or unintended mute cycle is minimized, as determined and allowed by the machine's risk assessment. It is the user's responsibility to ensure that this does not create a hazardous situation.

2.2.14 Mute on Power-Up

Mute Enable must be closed to allow Mute on Power-Up. If selected, the Mute on Power-Up function will initiate a mute when power is applied, the Mute Enable input is closed, the Muteable Safety Stop Interface (MSSI) inputs are active (closed), and either M1−M2 or M3−M4 (but not all four) are closed.

If Auto Reset is configured, the Module allows 10 seconds for the MSSI and Safety (Protective) Stop Interface (SSI) to become active (closed) to accommodate systems that may not be immediately active at power-up.

If Manual Reset is configured, the first valid reset after the MSSI and SSI are active (closed) will result in a mute cycle if all other conditions are satisfied.

WARNING: Mute on Power-Up Function—Only use the Mute on Power-Up function in applications where:
- Muting the System (M1 and M2 closed) when power is applied is required, and
- Using it does not, in any situation, expose personnel to any hazard.

2.2.15 Override

The Override function (X9−X10, X11−X12) allows the user to manually force the Output Signal Switching Device (OSSD) outputs ON for up to 30 seconds in a situation such as an object becoming stuck in the defined area of a safety light screen after the mute ends (for example, a car body on a transfer line entering a work cell). The feature is intended to allow the user to jog the part out of the defined area. The need to perform an Override is indicated by a flashing mute lamp.

This input requires two normally open switches, both of which must be closed within 3 seconds of each other. The Override cycle will last a maximum of 30 seconds, after which the Override input must be released for at least 0.5 seconds before the next Override cycle. An Override can be initiated only after tripping of the Muteable Safety Stop Interface (MSSI) inputs causes the Module to latch its OSSDs OFF. This override is a mute-dependent override, so at least one mute sensor must also be blocked (on).

NOTE: A stop command issued by the Safety (Protective) Stop Interface (SSI) cannot be overridden.

When Override is used, the following precautions must be taken:
- Prevent exposure to any hazard during an Override
- Provide a readily observable indication of an Override
- Provide supplemental safeguarding, per NFPA79 and IEC/EN 60204-1

The Override switches must be supervised and must prevent automatic operation. Also, one or more of the following must be true:
- Motion is initiated by a hold-to-run or similar device
- If a portable control station (for example, an enabling device) with an emergency stop device is used, motion may be initiated only from that station
- Motion, speed, or power of the machine is limited
- The machine's range of motion is limited

© Banner Engineering Corp. All rights reserved.
www.bannerengineering.com

WARNING:

- **Limit the use of the bypass and/or override function**
- Failure to follow these instructions could result in serious injury or death.
- The bypass and/or override function is not intended for production purposes; use it only for temporary or intermittent actions, such as to clear the defined area of a safety light curtain if material becomes stuck. When bypass and/or override is used, the user must install and use it according to applicable standards (such as NFPA 79 or IEC/EN60204-1).

2.2.16 One-Way/Two-Way Muting

One-way (directional) muting allows the safeguard to be muted only if mute devices are actuated in the order M1, M2, (mute initiated), M3, and M4. This method allows for a single-direction material flow and reduces the possibility of intentional defeat of the muting devices.

Two-way (non-directional) muting allows the safeguard to be muted any time the actuation of M1−M2 or M3−M4 meets the 3-second simultaneity requirement. This allows the flow of material from either direction (two-way material flow).

NOTE: The object must activate all four mute devices (M1, M2, M3 and M4) at one time during the mute cycle when using four mute devices to extend the mute until the light screen is clear.

2.3 Designated and Qualified Persons

For the purposes of this manual, the following definitions apply:

Designated Person: A person or persons identified and designated in writing, by the employer, as being appropriately trained and qualified to perform a specified checkout procedure.

Qualified Person: A person or persons who, by possession of a recognized degree or certificate of professional training, or who, by extensive knowledge, training, and experience, has successfully demonstrated the ability to solve problems relating to the implementation of this safety system.

© Banner Engineering Corp. All rights reserved.
www.bannerengineering.com

Chapter Contents

3.1 **Model MMD-TA-11B** 15
3.2 **Model MMD-TA-12B** 16
3.3 Dimensions 17

Chapter 3 Specifications

Overvoltage Category
III (IEC 60664-1)

Pollution Degree
2

Supply Protection Circuitry
All inputs and outputs are protected from short circuit to +24 V DC or DC common.

Status Indicator LEDs
3 Status Indicator LEDs (Red, Green and Amber): indicate waiting for Reset, Lockout, Override, and OSSD status

Amber and Green LEDs adjacent to individual inputs/ interfaces indicate status (ON = active/ closed)

Diagnostic Code Display
Diagnostic Display is a two-digit numeric display that indicates the cause of lockout conditions and the amount of time remaining for the backdoor timer.

Muting Lamp Output
A monitored or non-monitored (selectable) sinking output. If monitoring has been selected, the current draw must be 10 mA to 360 mA. Interconnect wire resistance < 30 ohms.

Maximum Switching Voltage: 30 V DC

Maximum Switching Current: 360 mA

Minimum Switching Current: 10 mA

Saturation Voltage: ≤ 1.5 V DC at 10 mA; ≤ 5 V DC at 360 mA

Controls and Adjustments
All configured on two redundant banks of DIP switches:

Manual/auto reset
One-way/two-way muting
Monitored/non-monitored mute lamp output
One-channel/two-channel/no EDM
Backdoor timer
Mute on power-up enable

Inputs
The MSSI and the SSI can be interfaced with external devices that have either hard contact outputs or solid-state sourcing outputs.

When connecting the MSSI (S11-S12, S21-S22) or SSI (X5-X6, X7-X8) inputs to relay outputs or hard contacts, these contacts must be capable of switching 15-30V dc at 10-50 mA.

Operating Range for MSSI and SSI Inputs:

OFF State: -3 V to +5 V, 0 to 2 mA
ON State: 15-30 V, 10-50 mA

Mutable Safety Stop Interface (MSSI): This input consists of two channels (MSSI-A and MSSI-B), and can be muted when the requirements for a mute cycle have been met. When muted, the OSSDs remain ON, independent of the MSSI status. If not muted, anytime either or both channels open, the OSSD outputs will go OFF. *Maximum external resistance per channel must not exceed 400 Ω.* (See "SSI and MSSI Interfacing" on page 29 for further information.)

Safety Stop Interface (SSI): This input consists of two channels (SSI-A and SSI-B), and is always active. Any time either or both channels open, the OSSD Outputs will go OFF. *Maximum external resistance per channel must not exceed 400 Ω.* (See "SSI and MSSI Interfacing" on page 29 for further information.)

External Device Monitoring (EDM)
Two pairs of terminals are provided to monitor the state of external devices controlled by the OSSD outputs. Each device must be capable of switching 15-30V dc at 10-50 mA.

Muting Device Inputs
The muting devices work in pairs (M1 and M2, M3 and M4) and are required to be closed within 3 seconds of each other (simultaneity requirement/synchronous actuation) to initiate a mute (assuming all other conditions are met). Each muting device must be capable of switching 15-30 V DC at 10-50 mA.

Mute Enable Input
The Mute Enable input must have +24 V DC applied to start a mute; opening this input after mute has begun has no effect. The switching device must be capable of switching 15-30 V DC at 10-50 mA.

Override Inputs
The two-channel inputs must be closed within 3 seconds of each other (simultaneity/synchronous action requirement) and held closed during the 30-second Override. To initiate a subsequent Override, open both channels, wait 3 seconds, and then re-close both channels (within 3 seconds). The switching devices must be capable of switching 15-30 V DC at 10-50 mA.

Reset Input
Terminals must be closed for a minimum of 0.25 seconds and not more than 2.0 seconds to guarantee a reset. The switching device must be capable of switching 15-30 V DC at 10-50 mA.

Mounting
Mounts to standard 35 mm DIN-rail track

Vibration Resistance
10 Hz to 55 Hz at 0.35 mm displacement per IEC 68-2-6

Construction
Polycarbonate housing.

Environmental Rating
Rated NEMA 1; IEC IP20. Safety Module must be installed inside an enclosure rated NEMA 3 (IEC IP54) or better.

Connections
Removable terminal blocks; see "Figure: MMD-TA-11B terminal connection locations" on page 23 for terminal locations.

Terminal Torque
0.8 N·m (7 lb-in)

Maximum Wire Cross-Section for Connection

Each 1 × 2.5 mm^2 stranded ferruled

Each 1 × 4 mm^2 solid

Each 2 × 1.5 mm^2 stranded ferruled

Operating Conditions
Temperature: 0 °C to +50 °C (+32 °F to +122 °F)

95% maximum relative humidity (non-condensing)

Heat Dissipation Considerations: See " Installing the Module-Muting Module" on page 21.

Safety Ratings
SIL 3 (IEC 61508); SIL CL 3 (IEC 62061); Category 4, Performance Level (PL) e (ISO 13849-1)

Model MMD-TA-11B: PFHd of 2 x 10-9

Model MMD-TA-12B: PFHd of 1.2 x 10-9

© Banner Engineering Corp. All rights reserved.
www.bannerengineering.com

Application Notes

Mute Timing Sequences: "Mute Timing Sequences" on page 64

Typical Muting Applications: "Typical Muting Applications" on page 67

Application Standards: "U.S. Application Standards-Muting Module" on page 75

3.1 Model MMD-TA-11B

System Power Requirements

Model MMD-TA-11B: +24 V DC ±15% at 300 mA maximum (SELV/PELV)

(not including draw of the MSSI power, AUX, ML, M1-M4 and OSSD connections)

The external voltage supply must be capable of buffering brief mains interruptions of 20 ms, as specified in IEC/EN 60204-1

Response Time (MSSI and SSI)

(relay output) 20 ms maximum

Safety Outputs

Two normally open contact output channels and one normally closed auxiliary contact output channel: Each normally open output channel is a series connection of contacts from two forced-guided (positive-guided) relays, K1-K2. The normally closed AUX contact (non-safety) 31-32 is a parallel connection of contacts from K1-K2.

Contacts: AgNi, 5 µm gold-plated

Low Current Rating:

CAUTION: The 5 µm gold-plated contacts allow the switching of low current/low voltage. In these low-power applications, multiple contacts can also be switched in series (for example, dry switching). To preserve the gold plating on the contacts and also guarantee reliable switching, the following values should be kept within the minimum and maximum ranges.

Minimum voltage: 1 V AC/DC	**Maximum voltage:** 60 V
Minimum current: 5 mA AC/DC	**Maximum current:** 300 mA
Minimum power: 5 mW (5 mVA)	**Maximum power:** 7 W (7 VA)

High Current Rating: If higher loads must be switched through one or more of the contacts, the minimum and maximum values of the contact(s) changes to:

Minimum voltage: 15 V AC/DC	**Maximum voltage:** 120 V AC/DC
Minimum current: 30 mA AC/DC	**Maximum current:** 6 A
Minimum power: 0.45 W (0.45 VA)	**Maximum power:** 160 W (720 VA)

Mechanical life: 50,000,000 operations

Electrical life: 120,000 operations (typical, at 144 W [1,380 VA] switched power, resistive load)

NOTE: Transient suppression is recommended when switching inductive loads. Install suppressors across load. Never install suppressors across output contacts (see Warning, in "Permanent Wiring to the Guarded Machine-Muting Module" on page 45).

Certifications [3]

CE	SIL 3 (IEC 61508 & 62061) Category 4, PL e (ISO 13849-1)	c UL us LISTED	ESPE 10GH	NIPF UL 1998 UL 61496
In the E.U., for use as a replacement device only.				

[3] Contact Banner for IEC 61508/62061 and ISO 13849-1 data.

Non-Safety Outputs

Aux. output 31-32 is a parallel connection of two normally closed contacts from internal relays K1 and K2.

Contact: AgNi, 5 µm gold-plated

Low Current Rating:

CAUTION: The 5 µm gold-plated contacts allow the switching of low current/low voltage. To preserve the gold plating on the contacts and also guarantee reliable switching, the following values should be kept within the minimum and maximum ranges.

Minimum Voltage: 1 V AC/DC	**Maximum Voltage:** 24 V AC/DC
Minimum Current: 5 mA AC/DC	**Maximum Current:** 250 mA AC/DC
Minimum Power: 5 mW (5 mVA)	**Maximum Power:** 6 W (6 VA)

High Current Rating: For higher loads, the min. and max. values of the contact(s) changes to:

Minimum Voltage: 15 V AC/DC	**Maximum Voltage:** 24 V AC/DC
Minimum Current: 30 mA AC/DC	**Maximum Current:** 250 mA AC/DC
Minimum Power: 0.45 W (0.45 VA)	**Maximum Power:** 6 W (6 VA)

Mechanical Life: 50,000,000 operations

Electrical Life: >10 x 106 cycles

© Banner Engineering Corp. All rights reserved.
www.bannerengineering.com

3.2 Model MMD-TA-12B

here

System Power Requirements

+24 V DC ±15% at 250 mA maximum (SELV/PELV)

(not including draw of the MSSI power, AUX, ML, M1-M4 and OSSD connections)

The external voltage supply must be capable of buffering brief mains interruptions of 20 ms, as specified in IEC/EN 60204-1

Response Time (MSSI and SSI)

(solid-state output) 10 ms maximum

Safety Outputs: Model MMD-TA-12B

Two diverse-redundant solid-state safety outputs: 24 V DC, 0.5 A sourcing OSSD (output signal switching device)

ON-State voltage: ≥ Vin-1.5 V DC

OFF-State voltage: 1.2 V DC maximum (0-1.2 V DC)

Maximum load capacitance: 1.0 µF

Maximum load inductance: 10 H

Leakage current: 0.50 mA maximum

Cable resistance: 10 ohms maximum

OSSD test pulse width: < 100 µs

OSSD test pulse period: > 100 ms

Switching current: 0-0.5 A

Non-Safety Outputs

Z4-Z3 = Aux. 24 V / 250 mA PNP output follows the two OSSD safety outputs

© Banner Engineering Corp. All rights reserved.

3.3 Dimensions

All measurements are listed in millimeters [inches], unless noted otherwise. The measurements provided are subject to change.

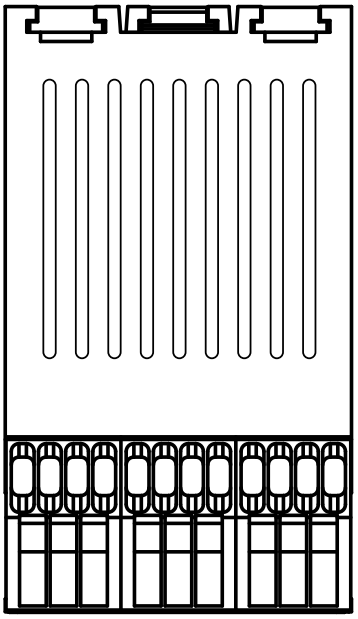

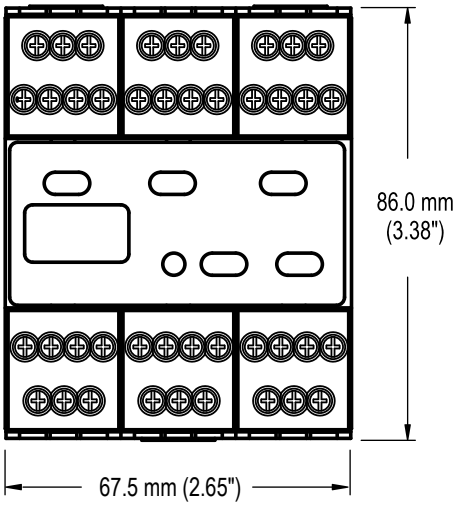

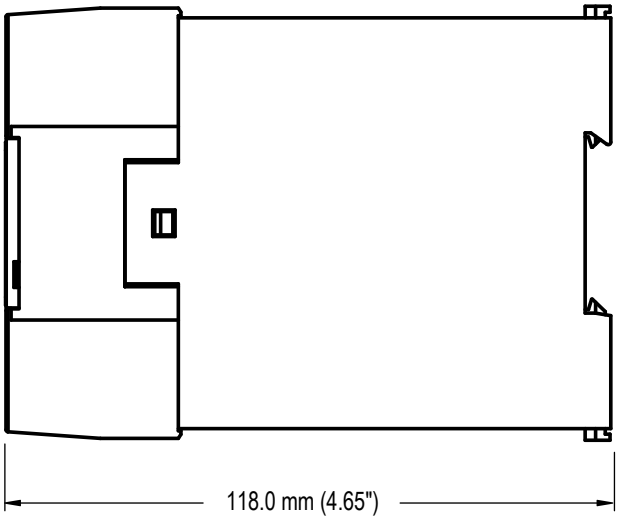

© Banner Engineering Corp. All rights reserved.
www.bannerengineering.com

Chapter Contents

4.1 Appropriate Application 18
4.2 **Important...Read this Before Proceeding!** 18
4.3 Muting Application Design 19
4.4 Use of Corner Mirrors with Optical Safety Systems 19
4.5 Multiple Presence-Sensing Safety Devices (PSSDs) 20
4.6 Pass-Through Hazards 20
4.7 Installing the Module 21
4.8 Muting Module Configuration 21
4.9 Connection Terminals and Functions 22
4.10 Installing Input Devices 25
4.11 Mute Lamp Output (ML) 28
4.12 Auxiliary Output (AUX) 28
4.13 Override Switch Wiring 29
4.14 SSI and MSSI Interfacing 29
4.15 Safety Circuit Integrity and ISO 13849-1 30
4.16 Generic SSI and MSSI Wiring 31
4.17 SSI Emergency Stop Switch Device Wiring 33
4.18 SSI/MSSI Interlocked Guard or Gate Wiring 36
4.19 SSI Supplemental Safety System Wiring 39

Chapter 4 System Installation

4.1 Appropriate Application

The correct application of the MMD-TA-11B and -12B Muting Modules is dependent on the type of machine and the safeguards that are to be interfaced with the Module. The Module is generally interfaced with safeguards that may be used only on machinery that is capable of stopping motion immediately upon receiving a stop signal and at any point in its machine cycle. It is the user's responsibility to verify whether the safeguarding is appropriate for the application and is installed as instructed by the appropriate installation manuals.

Safety Light Screens, Single/Multiple Beam Safety Systems, or other Presence-Sensing Safeguarding Devices (PSSDs) generally may not be used for the following:

- With single stroke (also called full revolution) clutched machinery, as this type of machinery is incapable of stopping immediately.
- On certain other types of machinery, including any machine with inadequate or inconsistent stopping response time, or any machine that ejects materials or component parts through the defined area.
- In any environment likely to adversely affect the efficiency of the safeguard(s) or the Muting Module. For example, corrosive chemicals or fluids or unusually severe levels of smoke or dust, if not controlled, may degrade the efficiency of a safety light screen.

If there is any doubt about whether or not your machinery is compatible with this Muting Module, contact Banner's Application Engineers at the factory.



WARNING:

- **Not a stand-alone point-of-operation guarding device**
- This Banner Engineering Corp. device is not a stand-alone point-of-operation guarding device, as defined by OSHA regulations. Failure to install point-of-operation guards on hazardous machinery can result in a dangerous condition that could lead to serious injury or death.
- Install point-of-operation guarding devices, such as safety light curtains and/or hard guards, to protect personnel from hazardous machinery.

4.2 Important...Read this Before Proceeding!

The Banner MMD-TA-11B or -12B Muting Module is an accessory device that is typically used in conjunction with a machine safeguarding device. Its ability to perform this function depends upon the appropriateness of the application and upon the Muting Module's proper mechanical and electrical installation and interfacing to the machine to be guarded.

© Banner Engineering Corp. All rights reserved.
www.bannerengineering.com

If all mounting, installation, interfacing, and checkout procedures are not followed properly, the Muting Module cannot provide the protection for which it was designed.

WARNING:
- Follow all regulations.
- Failure to follow these instructions could result in serious bodily injury or death.
- The user is responsible to ensure that all local, state, and national laws, rules, codes, or regulations relating to the installation and use of this control system in any particular application are satisfied. Extreme care should be taken to ensure that all legal requirements have been met and that all technical installation and maintenance instructions contained in this manual are followed. Read this manual carefully before installing the system.

The user has the sole responsibility to ensure that this Muting Module is installed and interfaced to the guarded machine by Qualified Persons, in accordance with this manual and applicable safety regulations.

IMPORTANT: The user is responsible for safe application of this product.
The muting application examples described in "Typical Muting Applications" on page 67 depict generalized guarding situations. Every guarding application has a unique set of requirements.

Ensure that all legal requirements are met and that all installation instructions are followed. Direct any questions regarding safeguarding should Banner Engineering.

4.3 Muting Application Design

Following are typical applications where muting is used. See "Typical Muting Applications" on page 67 for more detailed information.

- Entry/Exit Applications. The muting devices are placed to allow the entry or exit of a pallet or cart of work materials to enter or exit a workstation without tripping the safety light screen, and without allowing the entrance of personnel into the hazardous area.
- Home or Station Applications. The muting devices must be placed to mute the safety light screen only when a hazard does not exist or is in another area — so that personnel are not exposed to any hazard.
- Robot Load/Unload Station Application. The Station muting application uses independent safety light screen circuits, each with its own muting circuit and sensors to protect work locations. When a robot is active in Station A, for example, Station B safety light screen is muted.
- Turret Table Application. A Turret Table application is similar to the Robot Load/Unload Station muting application, except that any movement of the table ends the mute.
- Power Press Applications. The muting devices are placed so that the mute is initiated only during the non-hazardous, opening portion of the cycle (typically the machine upstroke).

WARNING:
- **Muting is allowed only during the non-hazardous portion of the machine cycle**
- Failure to follow these instructions could result in serious injury or death.
- Design the muting application so that no single component failure can prevent the stop command or allow subsequent machine cycles until the failure is corrected (per ISO 13849-1 and ANSI B11.19).

4.4 Use of Corner Mirrors with Optical Safety Systems

Mirrors are typically used with safety light screens and single-/multiple-beam safety systems to guard multiple sides of a hazardous area. If the safety light screen is muted, the safeguarding function is suspended on all sides. It must not be possible for an individual to enter the guarded area without being detected and a stop command issued to the machine control. This supplemental safeguarding is normally provided by an additional device(s) that remains active while the Primary Safeguard is muted and could be interfaced with the Safety (Protective) Stop Interface (SSI) input. Therefore, mirrors are typically not allowed for muting applications.

© Banner Engineering Corp. All rights reserved.
www.bannerengineering.com

4.5 Multiple Presence-Sensing Safety Devices (PSSDs)

Muting multiple PSSDs or a PSSD with multiple sensing fields is not recommended unless it is not possible for an individual to enter the guarded area without being detected and a stop command issued to the machine control. If multiple sensing fields are muted the possibility exists that personnel could move through a muted area or access point to enter the safeguarded area without being detected.

For example, in an entry/exit application where a pallet initiates the mute cycle by entering a cell, if both the entry and the exit PSSDs are muted, it may be possible for an individual to access the guarded area through the exit of the cell. An appropriate solution would be to mute the entry and the exit with separate safeguarding devices.

WARNING:

- **Do not safeguard multiple areas with mirrors or multiple sensing fields if personnel can enter the hazardous area while the system is muted and not be detected**
- Entering the hazardous area without being detected is dangerous and could result in serious injury or death.
- Verify all areas are guarded and a stop command is issued to the guarded machine when someone enters the hazardous area.

4.6 Pass-Through Hazards

A pass-through hazard is associated with applications where personnel may pass through a safeguard (at which point the hazard stops or is removed), and then may continue into the hazardous area. Subsequently, their presence is no longer detected, and the safeguard can not prevent the start or restart of the machine. The related danger is the unexpected start or restart of the machine while personnel are within the hazardous area.

In the use of safety light screens, a pass-through hazard typically results from large separation/safety distances calculated from long stopping times, large defined area resolution, reach over, reach through, or other installation considerations. A pass-through hazard can be generated with as little as 75 mm (3 in) between the defined area and the machine frame or hard guarding.

4.6.1 Reducing or Eliminating Pass-Through Hazards

Measures must be taken to eliminate or reduce pass-through hazards. One solution is to ensure that personnel are continually sensed while within the hazardous area. This can be accomplished by using supplemental safeguarding, including: safety mats, area scanners, and horizontally mounted safety light screens. While it is recommended to eliminate the pass-through hazard altogether, this may not be possible due to cell or machine layout, machine capabilities, or other application considerations.

An alternate method is to ensure that once the safeguarding device is tripped it will latch and require a deliberate manual action to reset. This type of supplemental safeguarding relies upon the location of the reset switch as well as safe work practices and procedures to prevent an unexpected start or restart of the guarded machine.

The reset switch or actuating control must be positioned outside the guarded area and provide the switch operator with a full unobstructed view of the entire guarded area and any associated hazards as the reset is performed. The reset switch or actuating control must not be reachable from within the guarded area and must be protected (through the use of rings or guards) against unauthorized or inadvertent operation. A key-actuated reset switch provides some operator control, as it can be removed by the operator and taken into the guarded area. However, this does not prevent unauthorized or inadvertent resets due to spare keys in the possession of others, or additional personnel entering the safeguarded area unnoticed. The reset of a safeguard must not initiate hazardous motion. Also, before each reset of the safeguard is performed, safe work procedures require that a start-up procedure be followed and that the individual performing the reset verify that the entire hazardous area is clear of all personnel. If any areas cannot be observed from the reset switch location, additional supplemental safeguarding must be used: at a minimum, visual and audible warnings of machine start-up.

© Banner Engineering Corp. All rights reserved.

WARNING:

- **Pass-Through Hazards, Presence-Sensing Safeguarding Devices, and Muting**
- If the presence-sensing safeguarding device (PSSD) is guarding an application in which personnel have access into the sensing area or field (for example, a machine operator at the point of operation) while the PSSD is muted, all pass-through hazards must be eliminated. The individual must be sensed continually while in the safeguarded area; this will prevent initiation of a machine cycle if the mute ends while the individual is within the hazardous area. If the pass-through hazard cannot be eliminated, as in entry/exit applications, the individual must be detected entering the safeguarded area and the hazardous motion must stop immediately.

4.7 Installing the Module

The Muting Module mounts to a standard 35 mm DIN-rail track. The Module must be installed inside an enclosure rated NEMA 3 (IEC IP 54) or better. It can be mounted in any orientation. It must be used with a properly installed and applied safeguard (for example, safety light screen, interlocked barrier guard). The user must comply with all instructions contained within product manuals and relevant regulations.

For reliable operation, the user must ensure that the operating specifications are not exceeded. The enclosure must provide adequate heat dissipation, so that the air closely surrounding the Module does not exceed its maximum operating temperature. Methods to reduce heat build-up include venting, forced air flow (for example, exhaust fans), adequate enclosure exterior surface area, and spacing between Modules and other sources of heat.

Mount the Module in a convenient location that is free from heavy impulse force and high-amplitude vibration.

Electrostatic Discharge (ESD) can cause damage to electronic equipment. To prevent this, follow proper ESD handling practices such as:

- Wear an approved wrist strap or other approved grounding products.
- Touch a grounded object before handling the Module.

See ANSI/ESD S20.20 for further information about managing ESD.

4.8 Muting Module Configuration

The Muting Module should be configured before initial checkout and use. Two banks of DIP switches are located under the front cover. To access the DIP switches, use a screwdriver to gently pry the cover loose from the Module housing.

Because the Module has redundant microprocessors, two DIP switch banks (Bank A and Bank B) must be set identically. Failure to set Bank A and Bank B identically will result in a lockout condition. Power must be OFF when changing DIP switch settings; changing settings while power is ON will cause a lockout condition. The parameters to be manually configured are shown in "Figure: Muting Module manual configuration parameters " on page 22.

Figure 3. Use a screwdriver to gently pry the cover loose from the Module housing

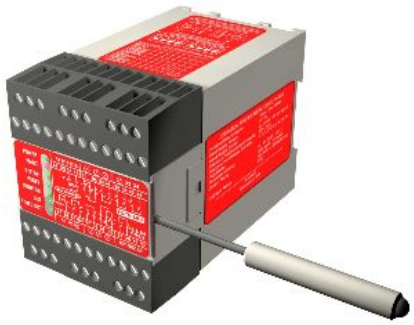

© Banner Engineering Corp. All rights reserved.
www.bannerengineering.com

Figure 4. Muting Module manual configuration parameters

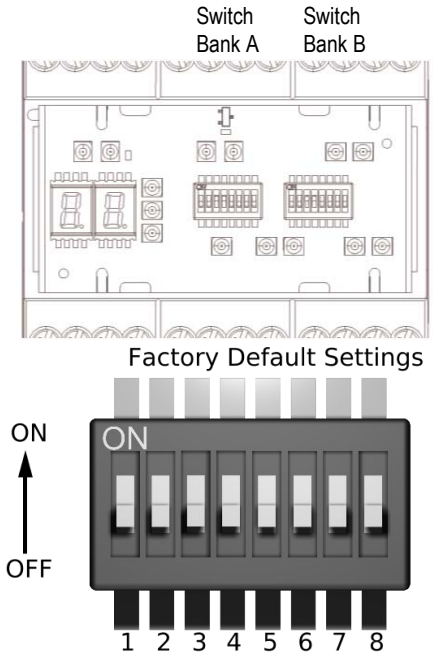

	Switch	ON Position	OFF Position
1	Auto/Manual MSSI Reset	MSSI auto reset	MSSI manual reset*
2	Auto/Manual SSI Reset	SSI auto reset	SSI manual reset*
3	One-Way or Two-Way Mute Initiate Sequence	Two-way muting (one sensor pair)	One-way muting*
4	One-Channel or Two-Channel EDM	One-channel EDM	Two-channel or no EDM*
5–6	Backdoor Time-Out	**5 ON, 6 ON**	**5 ON, 6 OFF**
		No backdoor time-out (infinite)	30-minute backdoor time-out
		5 OFF, 6 ON	**5 OFF, 6 OFF**
		60-second backdoor time-out	30-second backdoor time-out*
7	Monitored/Non-Monitored Mute Lamp	Mute lamp not monitored	Mute lamp monitored*
8	Mute on Power-Up	Mute on power-up	No mute on power up*

*Factory default setting.

NOTE: Switch numbers, for example SW 1, refer to both switch banks A and B.

4.9 Connection Terminals and Functions

All electrical connections are made through removable terminals.

Jumper terminal X5 (SSIb) to terminal X6 (SSIa), and jumper terminal X7 (SSId) to terminal X8 (SSIc) (factory default) to disable the Safety Stop Interface (SSI). Do not short Channel A to Channel B.

WARNING:

- **Risk of electric shock**
- Use extreme caution to avoid electrical shock. Serious injury or death could result.
- Always disconnect power from the safety system (for example, device, module, interfacing, etc.), guarded machine, and/or the machine being controlled before making any connections or replacing any component. Lockout/tagout procedures might be required. Refer to OSHA 29CFR1910.147, ANSI Z244-1, or the applicable standard for controlling hazardous energy.
- Make no more connections to the device or system than are described in this manual. Electrical installation and wiring must be made by a Qualified Person[4] and must comply with the applicable electrical standards and wiring codes, such as the NEC (National Electrical Code), NFPA 79, or IEC 60204-1, and all applicable local standards and codes.

[4] A person who, by possession of a recognized degree or certificate of professional training, or who, by extensive knowledge, training and experience, has successfully demonstrated the ability to solve problems relating to the subject matter and work.

© Banner Engineering Corp. All rights reserved.
www.bannerengineering.com

Figure 5. MMD-TA-11B terminal connection locations

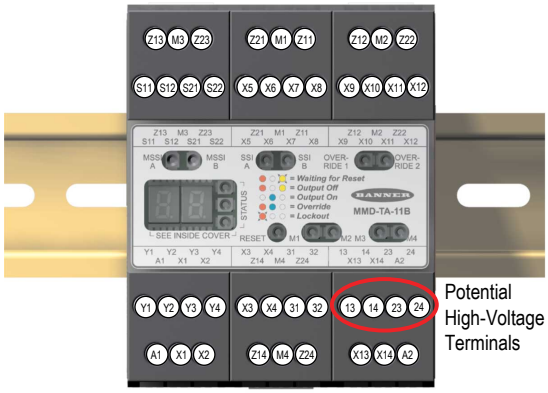

All terminals are low-voltage except for those indicated otherwise.

Terminal	Function		Terminal	Function		Terminal	Function
Z13	M3, 0V		Z21	M1, 24V		Z12	M2, 0V
M3	Muting 3 In (PNP)		M1	Muting 1 In (PNP)		M2	Muting 2 In (NPN)
Z23	M3, 24V		Z11	M1, 0V		Z22	M2, 24V
S11	MSSI b (ch A)		X5	SSI b (ch A)		X9	Override a (ch A)[5]
S12	MSSI a (ch A)		X6	SSI a (ch A)		X10	Override b (ch A)[5]
S21	MSSI d (ch B)		X7	SSI d (ch B)		X11	Override c (ch B)[5]
S22	MSSI c (ch B)		X8	SSI c (ch B)		X12	Override d (ch B)[5]
Y1	EDM 1 a Out (24V)		X3	Mute Lamp Out (24V)		13	OSSD 1 a (Relay)
Y2	EDM 1 b In		X4	Mute Lamp In		14	OSSD 1 b (Relay)
Y3	EDM 2 b In		31	AUX a (Relay)		23	OSSD 2 a (Relay)
Y4	EDM 2 a Out (24V)		32	AUX b (Relay)		24	OSSD 2 b (Relay)
A1	+24V dc		Z14	M4, 0V		X13	Mute Enable Out (24V)
X1	Reset In		M4	Muting 4 In (NPN)		X14	Mute Enable In
X2	Reset Out (24V)		Z24	M4, 24V		A2	0V dc

[5] Contacts only.

© Banner Engineering Corp. All rights reserved.
www.bannerengineering.com

Figure 6. MMD-TA-12B terminal connection locations

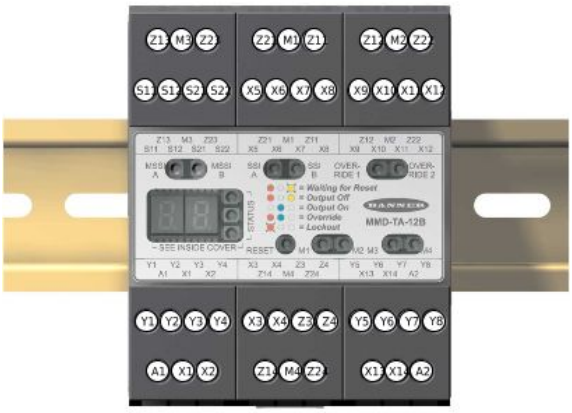

All terminals are low-voltage.

Terminal	Function		Terminal	Function		Terminal	Function
Z13	M3, 0V		Z21	M1, 24V		Z12	M2, 0V
M3	Muting 3 In (PNP)		M1	Muting 1 In (PNP)		M2	Muting 2 In (NPN)
Z23	M3, 24V		Z11	M1, 0V		Z22	M2, 24V
S11	MSSI b (ch A)		X5	SSI b (ch A)		X9	Override a (ch A)[6]
S12	MSSI a (ch A)		X6	SSI a (ch A)		X10	Override b (ch A)[6]
S21	MSSI d (ch B)		X7	SSI d (ch B)		X11	Override c (ch B)[6]
S22	MSSI c (ch B)		X8	SSI c (ch B)		X12	Override d (ch B)[6]
Y1	EDM 1 a Out (24V)		X3	Mute Lamp Out (24V)		Y5	OSSD 1 a Out
Y2	EDM 1 b In		X4	Mute Lamp In		Y6	OSSD 1 b 0V
Y3	EDM 2 b In		Z3	AUX b 0V		Y7	OSSD 2 b 0V
Y4	EDM 2 a Out (24V)		Z4	AUX a Out		Y8	OSSD 2 a Out
A1	+24V dc		Z14	M4, 0V		X13	Mute Enable Out (24V)
X1	Reset In		M4	Muting 4 In (NPN)		X14	Mute Enable In
X2	Reset Out (24V)		Z24	M4, 24V		A2	0V dc

4.9.1 Remove a Terminal Block

1. Insert a small screwdriver into the slot shown.

Figure 7. Removal of Terminal Blocks

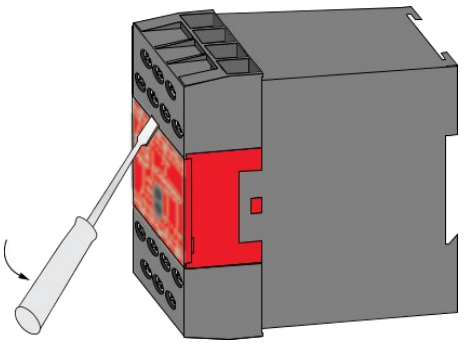

2. Pry to loosen.
3. When reinserting a terminal block, take care to slide the dovetail on the terminal block into the slot on the frame.

[6] Contacts only.

© Banner Engineering Corp. All rights reserved.
www.bannerengineering.com

4.10 Installing Input Devices

4.10.1 Manual Reset Switch

The manual reset switch connects to Module terminals X1 and X2. See "Muting Module Configuration" on page 21 for Auto/Manual Reset configuration.

Figure 8. Manual Reset switch connections

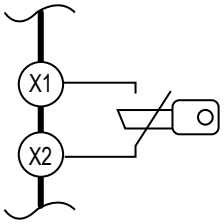

NOTE: If a solid state switch is used, connect the PNP output of the switch to X1. The switch must be powered from the same supply as the MMD.

Any reset switches must be located so that a reset is possible only from outside, and in full view of, the hazardous area. The switch must also be out of reach from within the safeguarded space. If any hazardous areas are out of view from the switch location, additional means of safeguarding must be provided.

The switch must be protected from accidental or unintended actuation (for example, through the use of rings or guards).

Using a key switch provides some level of personal control, because the key may be removed. This will hinder a reset while the key is under the control of an individual, but must not be relied upon solely to guard against accidental or unauthorized reset. Spare keys in the possession of others, or additional personnel entering the safeguarded area unnoticed may create a hazardous situation.

WARNING:

- **Install reset switches properly**
- Failure to properly install reset switches could result in serious injury or death.
- Install reset switches so that they are accessible only from outside, and in full view of, the safeguarded space. Reset switches cannot be accessible from within the safeguarded space. Protect reset switches against unauthorized or inadvertent operation (for example, through the use of rings or guards). If there are any hazardous areas that are not visible from the reset switches, provide additional safeguarding.

Reset Routine

The Muting Module requires a manual reset to clear a latch condition and resume operation following a stop command. To perform a manual reset, close the normally open reset switch and hold it there for at least 1/4 second, but not longer than 2 seconds, and then re-open the switch. Internal lockout conditions also require a manual reset to return the system to RUN mode after the failure has been corrected and the input correctly cycled.

4.10.2 Muting Devices

The beginning and end of a mute cycle must be triggered by outputs from either pair of muting devices, depending on the application. The mute device pairs both must have normally open contacts, or have one device with a PNP output and one device with an NPN output, both of which fulfill the muting device requirements in "Specifications" on page 14 and "Mute Devices" on page 11. These contacts must close (conduct) when the switch is actuated to initiate the mute, and must open (non-conducting) when the switch is not actuated and in a power-OFF condition.

The Module monitors the mute devices to verify that their outputs turn ON within 3 seconds of each other. If the inputs do not meet this simultaneity requirement, a mute condition cannot occur.

Several types and combinations of mute devices can be used, including, but not limited to: limit switches, photoelectric sensors, positive-driven safety switches, inductive proximity sensors, and whisker switches.

© Banner Engineering Corp. All rights reserved.
www.bannerengineering.com

General Muting Device Requirements

The muting devices (typically sensors or switches) must, at a minimum, comply with the following requirements:

1. There must be a minimum of two independent hard-wired muting devices.
2. The muting devices must either both have normally open contacts or PNP and NPN outputs, both of which must fulfill the input requirements listed in the Specifications. These contacts must close when the switch is actuated, and must open (or not conduct) when the switch is not actuated or in a power OFF condition.
3. The activation of the inputs to the muting function must be from separate sources. These sources must be mounted separately to prevent an unsafe muting condition resulting from misadjustment, misalignment, or a single common mode failure. (For example, physical damage to the mounting surface could cause both muting devices to be knocked out of alignment, resulting in false muting input signals.) Only one of these sources may pass through, or be affected by, a programmable logic controller or similar device.
4. The muting devices must be installed so that they can not be easily defeated or bypassed.
5. The muting devices must be mounted so that their physical position and alignment can not be easily changed.
6. It must not be possible for environmental conditions to initiate a mute condition (for example, extreme airborne contamination).
7. The muting devices must not be set to use any delay or other timing functions (unless such functions are accomplished so that no single component failure prevents the removal of the hazard, subsequent machine cycles are prevented until the failure is corrected, and no hazard is created by extending the muted period).

Examples of Muting Sensors and Switches

Photoelectric Sensors (Opposed Mode)

Opposed-mode sensors, which initiate the muted condition when the beam path is blocked, should be configured for dark operate (DO) and have open (non-conducting) output contacts in a power OFF condition. Both the emitter and receiver from each pair should be powered from the same source, to eliminate common mode failures.

Photoelectric Sensors (Polarized Retroreflective Mode)

The user must ensure that false proxing (activation due to shiny or reflective surfaces) is not possible. Banner LP sensors with linear polarization can greatly reduce or eliminate this effect.

Use a sensor configured for Light Operate (LO or N.O.) if initiating a mute when the retroreflective target or tape is detected (for example, home position). Use a sensor configured for Dark Operate (DO or N.C.) when a blocked beam path initiates the muted condition (for example, entry/exit). Both situations must have open (non-conducting) output contacts in a power OFF condition.

Positive-Opening Safety Switches

Two (or four) independent switches, each with a minimum of one closed safety contact to initiate the mute cycle, are typically used. *An application using a single switch with a single actuator and two closed contacts could result in an unsafe situation.*

Inductive Proximity Sensors

Typically, inductive proximity sensors are used to initiate a muted cycle when a metal surface is detected. Due to excessive leakage current causing false ON conditions, two-wire sensors are not to be used. Only three- or four-wire sensors that have discrete PNP, NPN, or hard-contact outputs that are separate from the input power can be used.

WARNING:

- **Avoid hazardous installations**
- Improper adjustment or positioning could result in serious injury or death.
- Properly adjust or position the two or four independent position switches so that they close only after the hazard no longer exists and open again when the cycle is complete or the hazard is again present.
- The user is responsible for satisfying all local, state, and national laws, rules, codes, and regulations relating to the use of safety equipment in any particular application. Ensure that all appropriate agency requirements have been met and that all installation and maintenance instructions contained in the appropriate manuals are followed.

Muting Device Wiring

The Module provides supply voltage, if required, and input connections for the muting devices. One or two pairs of muting devices (typically sensors or switches) must be used; these pairs are designated M1-M2 and M3-M4. The M1 and M3 inputs

© Banner Engineering Corp. All rights reserved.

are PNP (sourcing). The M2 and M4 inputs are NPN (sinking). Also available are terminals to supply power (+24 V DC) to the muting devices.

The current draw of all devices must not exceed 500 mA.

Figure 9. Four Limit Switches as M1, M2, M3, and M4

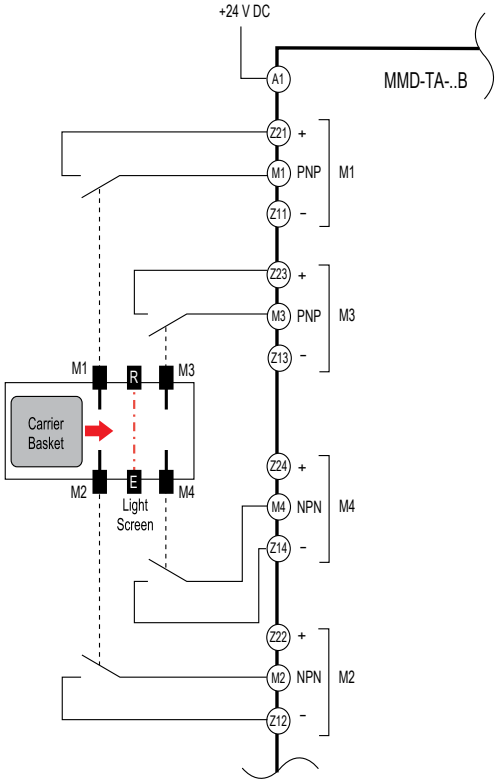

Figure 10. Relay (hard contact) output sensors

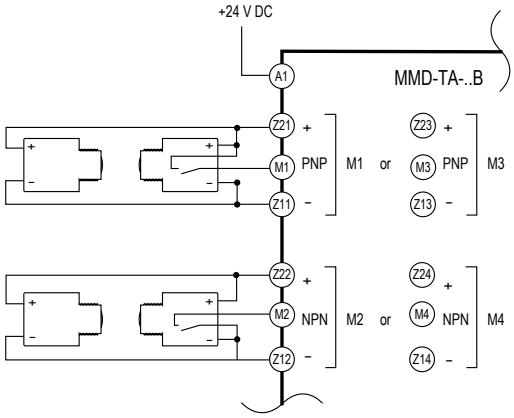

© Banner Engineering Corp. All rights reserved.
www.bannerengineering.com

Figure 11. Two (or four) sensors using semiconductor outputs

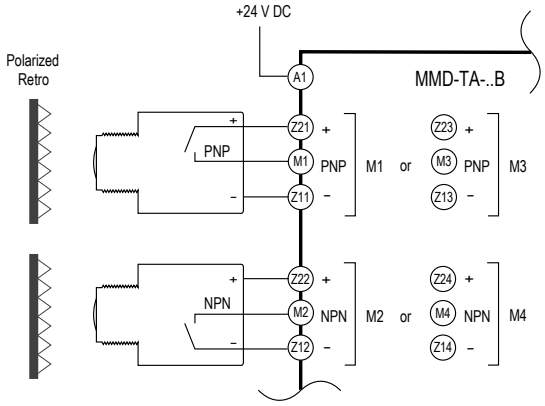

4.11 Mute Lamp Output (ML)

The Mute Lamp output provides for the visible indication that the safety device's safeguarding function is muted. This indication must be readily observable. Failure of this indication should be detectable and prevent the safeguard from being muted, or the operation of the indicator should be verified at suitable intervals. The Mute Lamp output also flashes to indicate an Override condition.

The Module can be configured for a monitored or non-monitored mute lamp. It is the user's responsibility to make sure that each application meets local regulations. If the installation is governed by UL regulations, the mute lamp must be monitored (SW7 = OFF, banks A and B). This output may also be used as an input to control logic (for example, a PLC) if **non-monitored** is selected (SW7 = ON, banks A and B). The current draw of the mute lamp must not exceed 360 mA. See the following figure.

Figure 12. Mute Lamp output wiring

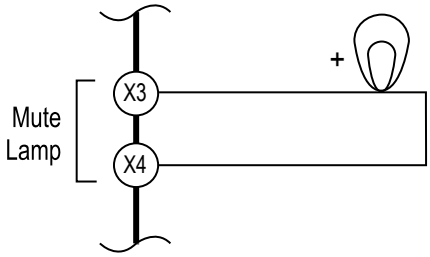

4.12 Auxiliary Output (AUX)

Figure 13. AUX output wiring — MMD-TA-11B

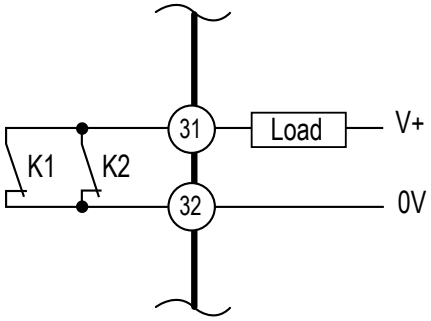

Figure 14. AUX output wiring — MMD-TA-12B

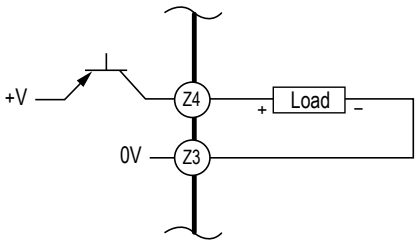

Continued on page 29

© Banner Engineering Corp. All rights reserved.
www.bannerengineering.com

Continued from page 28

MMD-TA-11B: The non-safety-related output on this model is a 24 V AC/DC, 250 mA normally-closed relay contact. See output specifications.

MMD-TA-12B: A non-safety-related PNP output is available at terminals Z3–Z4. This monitoring output is for light-duty, non-safety-related control functions, such as an input to a programmable logic controller (PLC). This output follows the OSSD outputs. The maximum current draw of the AUX output is 250 mA.

4.13 Override Switch Wiring

The Module provides connection terminals for the Override switches. See the following figure and "Override" on page 12.

Figure 15. Override switch wiring

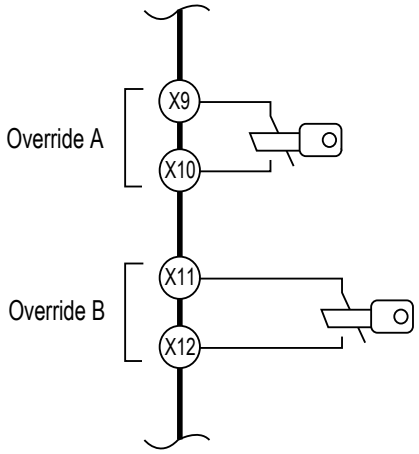

WARNING:

- **Limit the use of the bypass and/or override function**
- Failure to follow these instructions could result in serious injury or death.
- The bypass and/or override function is not intended for production purposes; use it only for temporary or intermittent actions, such as to clear the defined area of a safety light curtain if material becomes stuck. When bypass and/or override is used, the user must install and use it according to applicable standards (such as NFPA 79 or IEC/EN60204-1).

4.14 SSI and MSSI Interfacing

The Safety Stop Interface (SSI) provides easy integration of safeguards. This interface consists of two input channels (A and B), which are compatible with Banner Engineering safety devices that have solid-state Output Signal Switching Device (OSSD) outputs or other devices with sourcing +24 V dc outputs. SSI is also compatible with devices that have normally open hard contacts or relay outputs (voltage-free).

The Muteable Safety Stop Interface (MSSI) input is a specialized SSI that can be muted during the non-hazardous portion of the machine cycle.

The input channels (A and B) must meet a simultaneity requirement of 3.0 seconds upon closing and opening. A mismatch of more than 3.0 seconds will result in a lockout. A lockout that is due to a failure to meet simultaneity requirements can only be cleared by:

1. Cycling the MSSI (or the SSI, depending on which failed) with simultaneity being met.
2. If the Module is configured for Manual Reset, perform a reset routine.

The MSSI and the SSI can be interfaced with devices with solid-state OSSD outputs, safety interlocking switches, E-stop buttons, rope/cable pull devices, and other machine control devices that switch +24Vdc. To be interfaced with a safety mat, a

© Banner Engineering Corp. All rights reserved.
www.bannerengineering.com

safety mat controller must be connected between the mat and the interface (see "Figure: Interfacing supplemental safeguarding to prevent personnel from entering the hazardous area during the mute" on page 41).

NOTE: If the SSI is not to be used, the input channels must be jumpered. See "Connection Terminals and Functions-Muting Module" on page 22.

WARNING:
- **Emergency Stop Functions**
- Muting or bypassing the safety outputs will render the Emergency Stop function ineffective.
- Do not connect any Emergency Stop devices to the MSSI Input; do not mute or bypass any Emergency Stop device. NFPA79 and IEC/EN 60204-1 require that the Emergency Stop function remain active at all times.

4.15 Safety Circuit Integrity and ISO 13849-1

4.15.1 Safety Circuit Integrity and ISO 13849-1 Safety Circuit Principles

Safety circuits involve the safety-related functions of a machine that minimize the level of risk of harm. These safety-related functions can prevent initiation, or they can stop or remove a hazard. The failure of a safety-related function or its associated safety circuit usually results in an increased risk of harm.

The integrity of a safety circuit depends on several factors, including fault tolerance, risk reduction, reliable and well-tried components, well-tried safety principles, and other design considerations.

Depending on the level of risk associated with the machine or its operation, an appropriate level of safety circuit integrity (performance) must be incorporated into its design. Standards that detail safety performance levels include ANSI B11.19 Performance Criteria for Safeguarding and ISO 13849-1 Safety-Related Parts of a Control System.

4.15.2 Safety Circuit Integrity Levels

Safety circuits in International and European standards have been segmented into categories, depending on their ability to maintain their integrity in the event of a failure. The most recognized standard that details safety circuit integrity levels is EN ISO 13849-1, which establishes five levels: Categories B, 1, 2, 3, and the most stringent, Category 4.

In the United States, the typical level of safety circuit integrity has been called control reliability. Control reliability typically incorporates redundant control and self-checking circuitry and has been loosely equated to EN ISO 13849-1 Categories 3 and 4 (see CSA Z432 and ANSI B11.TR4).

If the requirements described by EN ISO 13849-1 are to be implemented, a risk assessment must first be performed to determine the appropriate category, in order to ensure that the expected risk reduction is achieved. This risk assessment must also take into account national regulations, such as U.S. control reliability or European “C” level standards, to ensure that the minimum level of performance that has been mandated is complied with.

4.15.3 Fault Exclusion

An important concept within the category requirements of ISO 13849-1 is the “probability of the occurrence of the failure,” which can be decreased using a technique termed *fault exclusion*. The rationale assumes that the possibility of certain well-defined failure(s) can be reduced to a point where the resulting fault(s) can be, for the most part, disregarded—that is, excluded.

Fault exclusion is a tool a designer can use during the development of the safety-related part of the control system and the risk assessment process. Fault exclusion allows the designer to design out the possibility of various failures and justify it through the risk assessment process to meet the intent requirements of Category 2, 3 or 4. See ISO 13849-1/-2 for further information.

IMPORTANT: Safety (Protective) Stop Interface (SSI) and Muteable Safety Stop Interface (MSSI) Safety Categories—The level of safety circuit integrity is affected by the design and installation of the safety devices and the means of interfacing of those devices. Perform a risk assessment to determine the appropriate safety circuit integrity level or safety category as described by ISO 13849-1, to ensure that the expected risk reduction is achieved, and that all relevant regulations are complied with.

© Banner Engineering Corp. All rights reserved.
www.bannerengineering.com

4.16 Generic SSI and MSSI Wiring

To fully understand category requirements, refer to standard ISO 13849-1. The following is general in nature and is intended to provide only basic guidance. Each guarding application has its unique set of requirements; it is the user's responsibility to ensure that all local, state, and national laws, rules, codes, and regulations are satisfied.

In addition to the use of well-tried, tested, and robust components, and generally accepted principles (including fault exclusion), the safety function depends on the use of safety-rated devices. These devices are specially designed to reduce the probability of failing to an unsafe condition, and typically are third-party certified to a recognized safety standard.

4.16.1 Category 2

To meet the requirements of a category 2 application, any device connected to the Safety (Protective) Stop Interface (SSI) and Muteable Safety Stop Interface (MSSI) inputs must meet certain criteria. For example, a type 2 light screen (curtain) that meets IEC 61496-1/-2 is a device that meets category 2 requirements.

A category 2 safety function must be tested/checked at suitable intervals, the frequency determined by the application's risk assessment. It should be noted that a single fault may cause the loss of the safety function.

The principle of fault exclusion must be incorporated into the design and installation to either eliminate, or reduce to an acceptable (minimal) level of risk, the possibility of undetected faults or failures that can result in the loss of the safety function.

Figure 16. MSSI and SSI Category 2 interfacing: positive opening switch

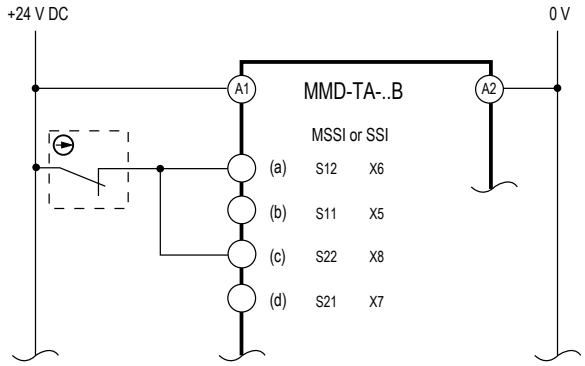

Figure 17. MSSI and SSI Category 2 interfacing: Category 2 safeguarding device (for example, EZ-SCREEN Type 2 or AOPD type 2 per IEC 61496-1/-2)

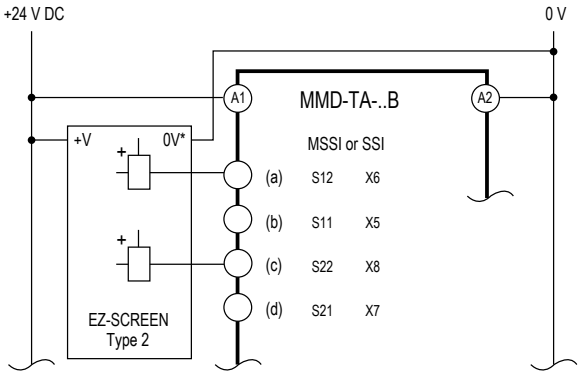

4.16.2 Category 3

To meet the requirements of a category 3 application, any device connected to the Safety (Protective) Stop Interface (SSI) and Muteable Safety Stop Interface (MSSI) inputs must meet certain criteria. For example, a type 3 laser area scanner that meets IEC 61496-1/-3 is a device that meets category 3 requirements.

In a category 3 safety application, a single fault must not cause the loss of the safety function. This is usually accomplished by using redundant safety inputs or outputs from the safety-rated device. Faults should be detected whenever reasonably

© Banner Engineering Corp. All rights reserved.
www.bannerengineering.com

practicable, although a short circuit between input channels or safety outputs may not be detected. It should be noted that an accumulation of faults may cause the loss of the safety function.

The principle of fault exclusion must be incorporated into the design and installation to either eliminate, or reduce to an acceptable (minimal) level of risk, the possibility of undetected faults or catastrophic failures that could result in the loss of the safety function.

Figure 18. MSSI and SSI Category 3 interfacing: two positive-opening switches per single guard

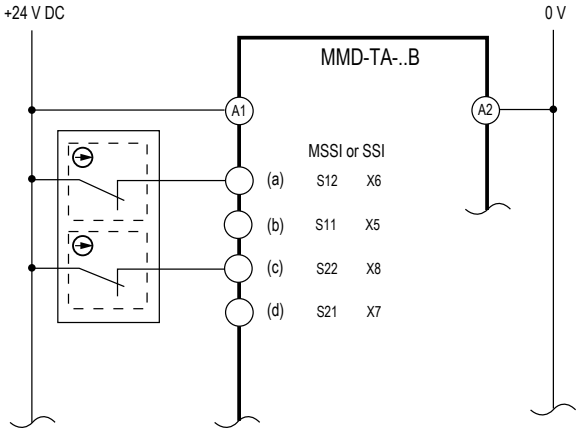

Figure 19. MSSI and SSI Category 3 interfacing: Category 3 safeguarding device with output fault monitoring (for example, type 3 area scanner AOPDDR per IEC 61496-1/-3)

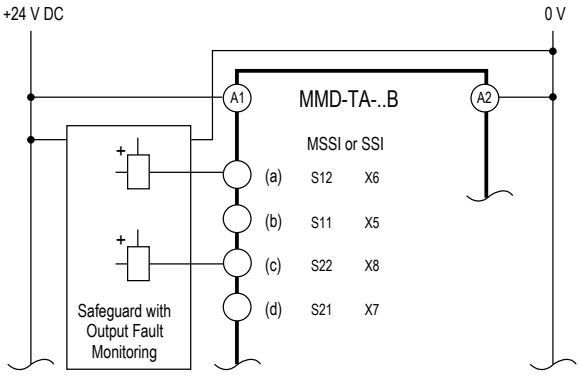

4.16.3 Category 4

To ensure a category 4 application, any device connected to the Safety (Protective) Stop Interface (SSI) and Muteable Safety Stop Interface (MSSI) inputs must meet certain criteria. For example, a type 4 safety light screen (curtain) that meets IEC 61496-1/-2 is a device that meets category 4 requirements.

In a category 4 application, a single fault must not cause the loss of the safety function. The fault must be detected at or before the next demand of the safety function, and an accumulation of faults also must not cause the loss of the safety function.

This is usually accomplished by the use of redundant safety inputs or outputs from the safety-rated device that are monitored to detect certain faults. These faults include:

- Increased response time
- Prevention of one or more safety outputs (OSSDs) going to the OFF-state
- A short circuit between channels

NOTE: Solid-state safety outputs, such as those from EZ-SCREEN Type 4 safety light screens, typically achieve this level of fault tolerance by self-monitoring a pulsing of the outputs. Safety devices with hard-contact or relay outputs must be connected in a 4-wire method as shown in "Figure: MSSI and SSI Category 4 interfacing: category 4 safeguarding device with relay outputs (for example, MINI-SCREEN or AOPD Type 4 per IEC 61496-1/-2)" on page 33.

© Banner Engineering Corp. All rights reserved.
www.bannerengineering.com

The principle of fault exclusion must be incorporated into the design and installation to either eliminate, or reduce to an acceptable (minimal) level of risk, the possibility of catastrophic failures/faults that could result in the loss of the safety function.

Figure 20. MSSI and SSI Category 4 interfacing: two positive-opening switches per single guard

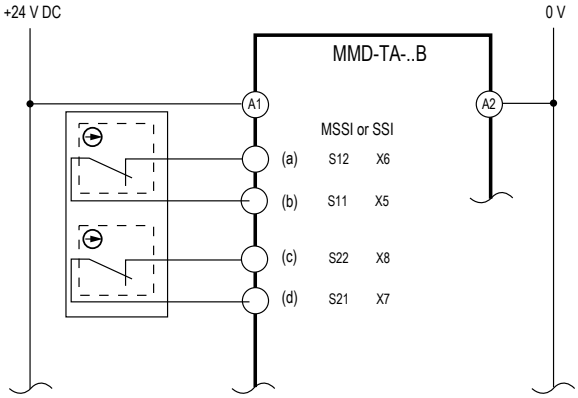

Figure 21. MSSI and SSI Category 4 interfacing: category 4 safeguarding device with output fault monitoring (for example, EZ-SCREEN or AOPD Type 4 per IEC 61496- 1/-2)

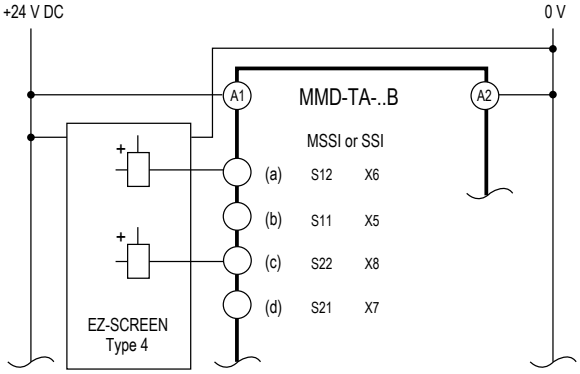

Figure 22. MSSI and SSI Category 4 interfacing: category 4 safeguarding device with relay outputs (for example, MINI-SCREEN or AOPD Type 4 per IEC 61496-1/-2)

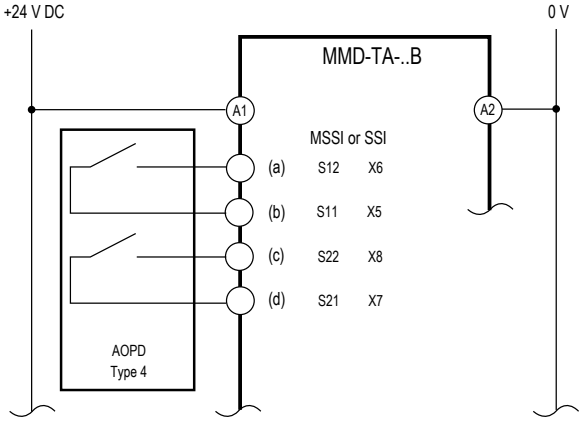

4.17 SSI Emergency Stop Switch Device Wiring

4.17.1 Emergency Stop Push Button Switches

As shown in "Figure: SSI Category 2 interfacing: positive-opening E-stop switch(es)" on page 35, "Figure: SSI Category 3 interfacing: positive-opening E-stop switch(es)" on page 35, "Figure: SSI Category 4 interfacing: positive-opening E-stop

© Banner Engineering Corp. All rights reserved.
www.bannerengineering.com

switch(es)" on page 36, the E-stop switch must provide one or two contacts for safety which are closed when the switch is armed. Once activated, the E-stop switch must open all its safety-rated contacts, and must require a deliberate action (such as twisting, pulling, or unlocking) to return to the closed-contact, armed position. The switch should be a positive opening (or direct-opening) type, as described by IEC 60947-5-1. A mechanical force applied to such a button (or switch) is transmitted directly to the contacts, forcing them open. This ensures that the switch contacts will open whenever the switch is activated.

Standards NFPA 79, IEC/EN 60204-1, and ISO 13850 specify additional emergency stop switch device requirements, including the following:

- Emergency Stop push buttons shall be located at each operator control station and at other operating stations where an emergency shutdown is required
- Stop and Emergency Stop push buttons shall be continuously operable and readily accessible from all control and operating stations where located. Do not connect E-stop buttons to the Muteable Safety Stop Interface (MSSI)
- Actuators of Emergency Stop devices shall be colored red. The background immediately around the device actuator shall be colored yellow. The actuator of a push-button-operated device shall be of the palm or mushroom-head type
- The Emergency Stop actuator shall be a self-latching type

NOTE: Some applications may have additional requirements. The user must comply with all relevant regulations.

WARNING: Emergency Stop Functions
Do not connect any Emergency Stop devices to the MSSI Input; do not mute or bypass any Emergency Stop device. NFPA79 and IEC/EN 60204-1 require that the Emergency Stop function remain active at all times. Muting or bypassing the safety outputs will render the Emergency Stop function ineffective.

WARNING:

- **Reset routine required**
- Failure to prevent the machine from restarting without actuating the normal start command/device can create an unsafe condition that could result in serious injury or death.
- Do not allow the machine to restart without actuating the normal start command/device. Perform the reset routine after clearing the cause of a stop condition, as required by U.S. and international standards.

4.17.2 Safety Circuit Integrity Levels and Emergency Stop Functions

As part of the required risk assessment for the machine, NFPA 79 and IEC/EN 60204-1 state that the safety performance (integrity) must reduce the risk from identified hazards as determined by the risk assessment.

See "Safety Circuit Integrity and ISO 13849-1-Muting Module" on page 30 and " Generic SSI and MSSI Wiring-Muting Module" on page 31 for guidance if the requirements as described by ISO 13849-1 are to be implemented.

In addition to the requirements stated above, the design and the installation of the emergency stop device (for example, switch, button, or rope-pull) must be such that the possibility of a catastrophic failure of the device resulting in the loss of the safety function must be excluded (designed out). Per ISO 13849-2, electromechanical devices that have contacts designed in accordance to IEC 60947-5-1 Annex K and that are installed per manufacturer's instructions are expected to open when the emergency stop device is actuated.

4.17.3 Category 2

A single-channel emergency stop application typically provides a category 2 level of circuit performance, because a short circuit could cause the loss of the safety function. The principle of fault exclusion must be incorporated into the design and installation to either eliminate, or reduce to an acceptable (minimal) level of risk, the possibility of undetected faults or failures that can result in the loss of the safety function.

© Banner Engineering Corp. All rights reserved.
www.bannerengineering.com

Figure 23. SSI Category 2 interfacing: positive-opening E-stop switch(es)

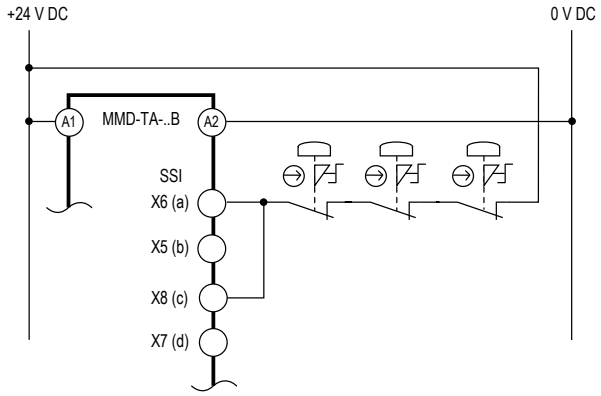

4.17.4 Category 3

A dual-channel wiring switching +24 V DC is typically a category 3 application, because a single failure does not result in a loss of safety. Loss of the switching action in one channel is detected by the actuation of the E-stop button, the opening of the second channel, and the monitoring function of the Safety (Protective) Stop Interface (SSI) inputs. However, a short circuit between input channels or safety outputs may not be detected. It should be noted that an accumulation of faults may cause the loss of the safety function.

The principle of fault exclusion must be incorporated into the design and installation to either eliminate, or reduce to an acceptable (minimal) level of risk, the possibility of undetected faults or catastrophic failures that could result in the loss of the safety function.

Figure 24. SSI Category 3 interfacing: positive-opening E-stop switch(es)

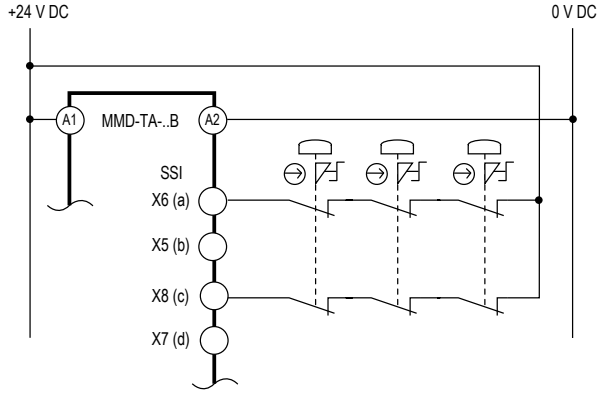

© Banner Engineering Corp. All rights reserved.
www.bannerengineering.com

4.17.5 Category 4

The self-monitoring Safety (Protective) Stop Interface (SSI) inputs can be interfaced to achieve a category 4 application. The principle of fault exclusion must be incorporated into the design and installation to either eliminate, or reduce to an acceptable (minimal) level of risk, the possibility of catastrophic failures or faults that could result in the loss of the safety function.

Figure 25. SSI Category 4 interfacing: positive-opening E-stop switch(es)

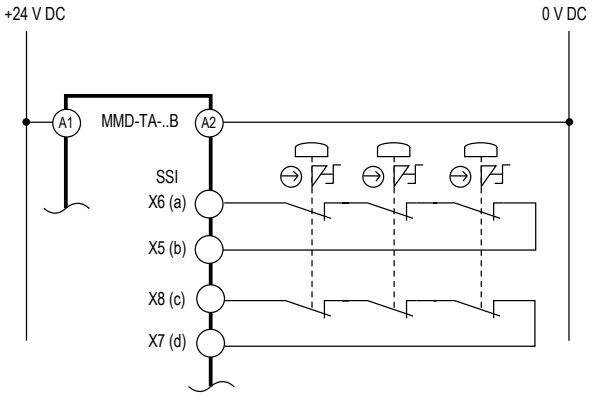

NOTE:

- Connect Multiple E-Stop Switches in Series
- Connecting the contacts of multiple e-stop switches in parallel to the e-stop safety module inputs defeats the switch contact monitoring ability of the safety module and creates an unsafe condition that could result in serious injury or death.
- When two or more e-stop switches are connected to the same e-stop safety module, connect the contacts of both switches together in series. Wire this series combination to the respective safety module input. Never connect the contacts of multiple e-stop switches in parallel to the e-stop safety module inputs.

4.18 SSI/MSSI Interlocked Guard or Gate Wiring

The SSI (or MSSI) may be used to monitor electrically interlocked safety guards or gates.

4.18.1 Safety Circuit Integrity Levels

The application requirements for vary for the level of control reliability or safety category per ISO 13849-1. While Banner Engineering always recommends the highest level of safety in any application, the user is responsible to safely install, operate, and maintain each safety system and comply with all relevant laws and regulations.

The safety performance (integrity) must reduce the risk from identified hazards as determined by the machine's risk assessment. See "Safety Circuit Integrity and ISO 13849-1 Safety Circuit Principles" on page 30 for guidance if the requirements as described by ISO 13849-1 need to be implemented.

In addition to the requirements stated in this section, the design and installation of the interlocking device should comply with ANSI B11.19 or ISO 14119.

4.18.2 Safety Interlock Switch Requirements

The following general requirements and considerations apply to the installation of interlocked guards and gates for the purpose of safeguarding. In addition, the user must refer to the relevant regulations to ensure compliance with all necessary requirements.

Hazards guarded by the interlocked guard must be prevented from operating until the guard is closed; a stop command must be issued to the guarded machine if the guard opens while the hazard is present. Closing the guard must not, by itself, initiate hazardous motion; a separate procedure must be required to initiate the motion. The safety interlock switches must not be used as a mechanical or end-of-travel stop.

© Banner Engineering Corp. All rights reserved.
www.bannerengineering.com

The guard must be located an adequate distance from the danger zone (so that the hazard has time to stop before the guard is opened sufficiently to provide access to the hazard), and it must open either laterally or away from the hazard, not into the safeguarded area. The guard also should not be able to close by itself and activate the interlocking circuitry. In addition, the installation must prevent personnel from reaching over, under, around, or through the guard to the hazard. Any openings in the guard must not allow access to the hazard (see OSHA 29CFR1910.217 Table O-10, ANSI B11.19, ISO 13857, EN ISO 14120 or the appropriate standard). The guard must be strong enough to contain hazards within the guarded area, which may be ejected, dropped, or emitted by the machine.

The safety interlock switches, actuators, sensors, and magnets must be designed and installed so that they cannot be easily defeated. They must be mounted securely so that their physical position cannot shift, using reliable fasteners that require a tool to remove them. Mounting slots in the housings are for initial adjustment only; final mounting holes must be used for permanent location.



WARNING: If the application could result in a pass-through hazard (for example, perimeter guarding), either the safeguarding device or the guarded machine's MSCs/MPCEs must cause a Latched response following a Stop command (for example, interruption of the sensing field of a light curtain, or opening of an interlocked gate/guard). The reset of this Latched condition may only be achieved by actuating a reset switch that is separate from the normal means of machine cycle initiation. The switch must be positioned as described in this document.



WARNING:

- **Perimeter guarding applications**
- Failure to observe this warning could result in serious injury or death.
- Use lockout/tagout procedures per ANSI Z244.1, or use additional safeguarding as described by ANSI B11.19 safety requirements or other applicable standards if a passthrough hazard cannot be eliminated or reduced to an acceptable level of risk.

4.18.3 Positive-Opening Safety Interlocking Switches

Safety interlock switches must satisfy several requirements. Each switch must provide electrically isolated contacts: at minimum, one normally closed (N.C.) contact from each individually mounted switch. The contacts must have positive-opening (direct-opening) design, as described by IEC 60947-5-1, with one or more normally closed contacts rated for safety. Positive-opening operation causes the switch to be forced open, without the use of springs, when the switch actuator is disengaged or moved from its home position (visit www.bannerengineering.com for examples).

In addition, the switches must be mounted in a positive mode to move/disengage the actuator from its home position and open the normally closed contact when the guard opens.

4.18.4 Monitoring Series-Connected Safety Interlock Switches

When monitoring two individually mounted safety switches (as shown in the Category 4 circuit figure), a faulty switch will be detected if it fails to switch as the guard opens. In this case, the Module will deenergize its safety outputs (OSSDs) and disable its reset function until the input requirements are met, such as the replacement of the faulty switch. However, when a series of safety interlocking switches is monitored by a single Module, the failure of one switch in the system may be masked or not be detected at all (see the Category 2 and Category 3 circuit figures).

Series-connected safety interlock switch circuits may not meet OSHA Control Reliability or ISO 13849 Safety Category 4 requirements because of the potential of an inappropriate reset or a potential loss of the safety stop signal. Those requirements are not met due to the typical inability to fault exclude the failure of the safety interlock switch. **A multiple connection of this type should not be used in applications where loss of the safety stop signal or an inappropriate reset can lead to serious injury or death.** The following scenarios assume two positive-opening safety switches on each guard, both connected in series to switches of a second guard:

1. **Masking of a failure.** If a guard is opened but the switch fails to open, the redundant safety switch will open and cause the Muting Module to de-energize its outputs. If the faulty guard is then closed, both Muting Module input channels also close, but because one channel did not open, the Muting Module will not reset. However, if the faulty switch is not replaced and a second functional guard is cycled (opening and then closing both of the Muting Module input channels), the Muting Module considers the failure to be corrected. With the input requirements apparently satisfied, the Muting Module allows a reset. This system is no longer redundant and, if the second switch fails, may result in an unsafe condition, such as the accumulation of faults resulting in loss of the safety function.
2. **Non-detection of a failure.** If a functional guard is opened, the Muting Module de-energizes its outputs (a normal response). But if then a faulty guard is opened and closed before the functional guard is re-closed, the faulty guard is

© Banner Engineering Corp. All rights reserved.
www.bannerengineering.com

not detected. This system is no longer redundant and may result in a loss of safety if the second safety switch fails to switch when needed.

The systems in either scenario do not inherently comply with the safety standard requirements of detecting single faults and preventing the next cycle. It is important to periodically check the functional integrity of each interlocked guard individually in multiple-guard systems using series-connected safety interlock switches. **Operators, maintenance personnel, and others associated with the operation of the machine must be trained to recognize such failures and be instructed to correct them immediately.**

To verify series-connected safety interlock switch functionality:

Open and close each safeguard separately while verifying that the Muting Module outputs operate correctly throughout the check procedure. Follow each safeguard closure with a manual reset, if needed. If a contact set fails, the Muting Module will not enable its reset function. If the Muting Module does not reset, a switch may have failed; that switch must be immediately replaced.
This check must be performed and all faults must be cleared, at a minimum, during periodic checkouts. **Do not use the series connection of the safety interlock switches if the application cannot exclude these types of failures and such a failure could result in serious injury or death.**

4.18.5 Category 2

A single-channel interlocked guard application typically provides a category 2 level of circuit performance, because a short circuit could cause the loss of the safety function. The principle of fault exclusion must be incorporated into the design and installation to either eliminate, or reduce to an acceptable (minimal) level of risk, the possibility of undetected faults or failures that can result in the loss of the safety function.

Figure 26. MSSI or SSI Category 2 interfacing: positive opening

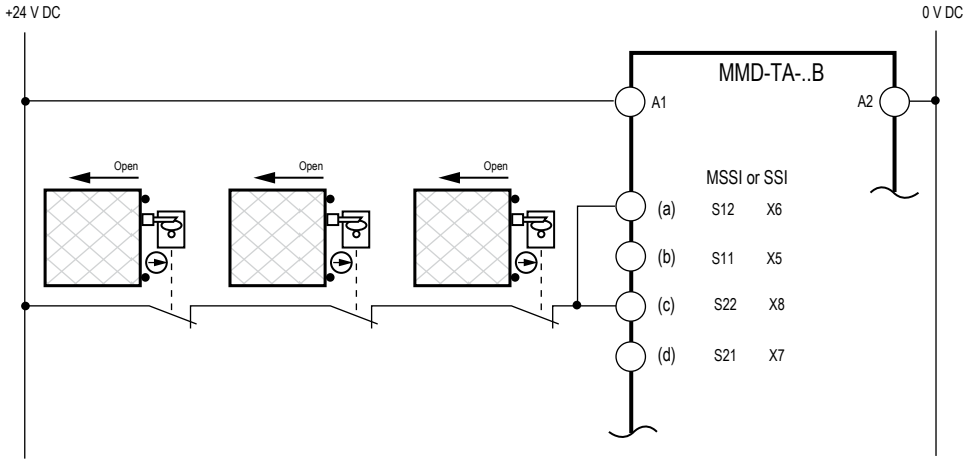

4.18.6 Category 3

A dual-channel wiring switching +24V DC is typically a category 3 application, because a single failure does not result in a loss of safety. Loss of the switching action in one channel is detected by the actuation of opening and closing the guard, allowing the monitoring function of the Muteable Safety Stop Interface (MSSI) or Safety (Protective) Stop Interface (SSI) inputs to detect the discrepancy between the channels. However, a short circuit between input channels or safety outputs may not be detected. It should be noted that an accumulation of faults may cause the loss of the safety function.

The principle of fault exclusion must be incorporated into the design and installation to either eliminate, or reduce to an acceptable (minimal) level of risk, the possibility of undetected faults or catastrophic failures that could result in the loss of the safety function.

© Banner Engineering Corp. All rights reserved.
www.bannerengineering.com

Figure 27. MSSI or SSI Category 3 interfacing: Positive-opening Interlocking switch(es)

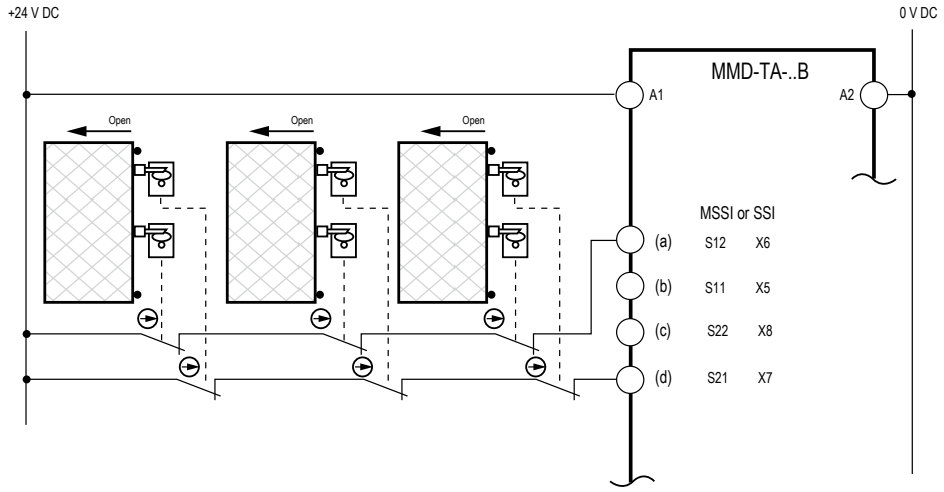

4.18.7 Category 4

The self-monitoring Muteable Safety Stop Interface (MSSI) or Safety (Protective) Stop Interface (SSI) inputs can be interfaced to achieve a category 4 application. The principle of fault exclusion must be incorporated into the design and installation to either eliminate, or reduce to an acceptable (minimal) level of risk, the possibility of catastrophic failures/faults that could result in the loss of the safety function.

Figure 28. SSI Category 4 interfacing: positive-opening interlocking switch(es)

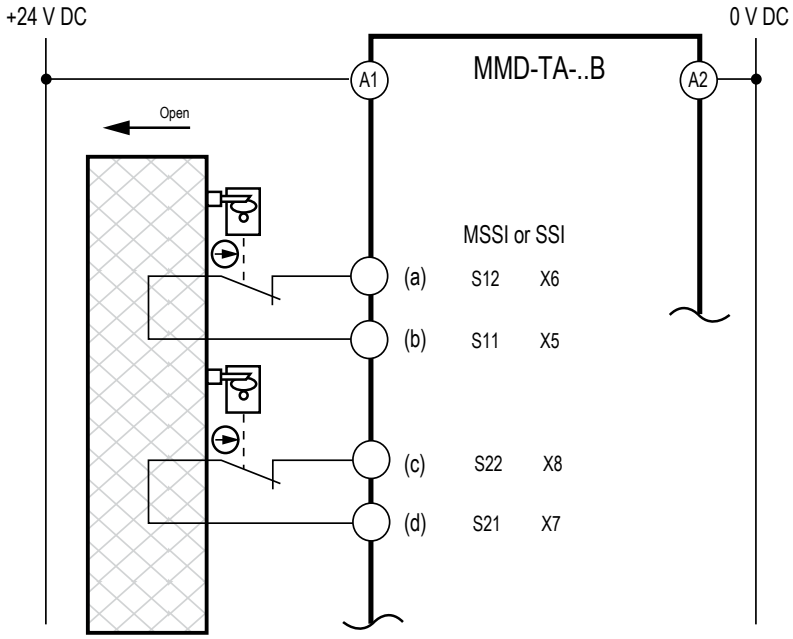

4.19 SSI Supplemental Safety System Wiring

A variety of safety systems can be interfaced with the Mutable Safety Stop Interface (MSSI) and the Safety Stop Interface (SSI). Each safety application has a unique set of application requirements. The user is responsible to ensure proper installation and use, and that all relevant standards and regulations are complied with. "Figure: Interfacing supplemental safeguarding to prevent personnel from entering the hazardous area during the mute" on page 41 shows a generic example of the flexibility of the SSI.

Entry/Exit Application with a Multiple-Beam Safety System (Muted) and a Safety Mat System: see "Typical Muting Applications" on page 67 for more information. This application is widely used in a variety of situations, including manufacturing cells, robotic cells, palletizers, and de-stackers. One of the many requirements of this muting application is

© Banner Engineering Corp. All rights reserved.
www.bannerengineering.com

that it must not be possible for personnel to walk in front of, behind, or next to the muted object (for example, the carrier basket) without being detected and stopping the hazardous motion.

"Figure: Interfacing supplemental safeguarding to prevent personnel from entering the hazardous area during the mute" on page 41 shows how supplemental safeguarding (such as a safety mat system or horizontal safety light screen) can be interfaced to prevent personnel from entering the hazardous area during a mute condition.

© Banner Engineering Corp. All rights reserved.

Figure 29. Interfacing supplemental safeguarding to prevent personnel from entering the hazardous area during the mute

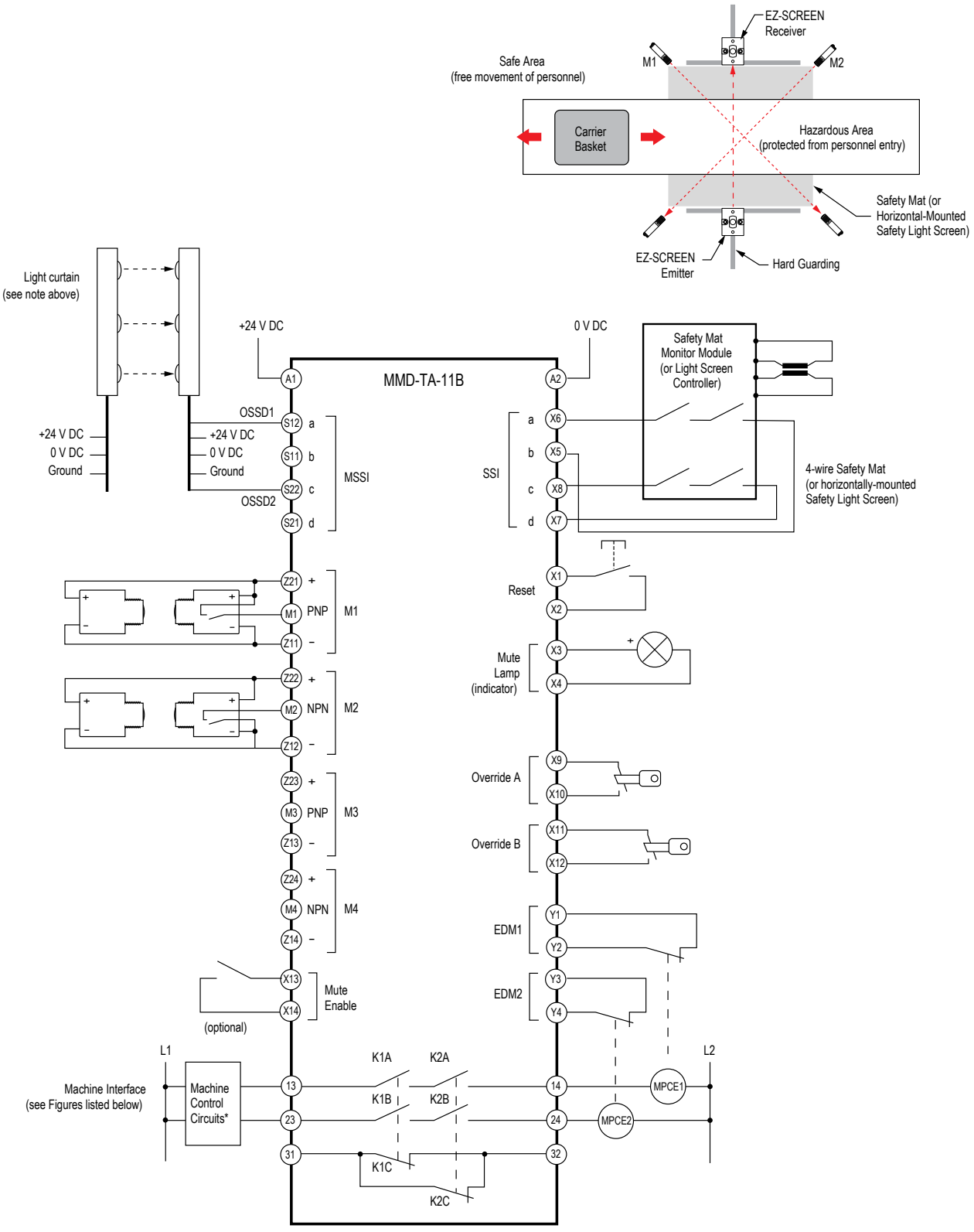

Machine interface - see "Figure: MSSI or SSI Category 3 interfacing: Positive-opening Interlocking switch(es)" on page 39, "Figure: SSI Category 4 interfacing: positive-opening interlocking switch(es)" on page 39, "Figure: Generic machine interface wiring: module model MMD-TA-12B, FSD with Two-Channel EDM" on page 46, and "Figure: Mute Enable Wiring" on page 50.

© Banner Engineering Corp. All rights reserved.
www.bannerengineering.com

Chapter Contents

5.1 Verifying System Operation 42
5.2 Temporary Power and Initial Checkout 42

Chapter 5 Machine Interface - Initial Wiring and Checkout

Model MMD-TA-11B provides two normally open safety relay output contacts (13−14 and 23−24) to hook up external MPCE1 and MPCE2, see "Figure: Generic machine interface wiring, model MMD-TA-11B: MPCE with 2-channel EDM" on page 49 and "Figure: Generic machine interface wiring, model MMD-TA-11B: MPCE with 1-channel EDM" on page 49.

Model MMD-TA-12B provides two PNP solid-state safety outputs, OSSD1 and OSSD2 (Y5−Y6 and Y7−Y8), see "Figure: Generic machine interface wiring: module model MMD-TA-12B, FSD with Two-Channel EDM" on page 46, "Figure: Generic machine interface wiring, model MMD-TA-12B: interface module with two-channel EDM" on page 47, and "Figure: Generic machine interface wiring, model MMD-TA-12B: interface module with one-channel EDM" on page 48.

For monitoring external devices (both models), normally closed contacts of these devices must be hooked up to EDM #1 (Y1−Y2) and EDM #2 (Y3–Y4).

Before proceeding, ensure that power has been removed from machine or ensure that power is not available to the machine controls or actuators, and ensure that the machine control (MPCEs) are not connected to or controlled by the OSSD or relay safety outputs at this time. Permanent connections will be made after Module initial checkout.

5.1 Verifying System Operation

The initial checkout procedure must be performed by a Qualified Person. It must be performed only after configuring the Module and after properly installing and configuring the safety systems connected to its Muteable Safety Stop Interface (MSSI) and the Safety (Protective) Stop Interface (SSI) inputs (per "System Installation" on page 18).

The initial checkout procedure is performed on two occasions:

- To ensure proper installation when the System is first installed
- To ensure proper System function whenever any maintenance or modification is performed on the System or on the machinery being guarded by the System.

For the initial checkout, the Muting Module and associated safety systems must be checked without power being available to the guarded machine. Final interface connections to the guarded machine cannot take place until these systems have been checked out.

Verify that:

- Power has been removed from (or is not available to) the guarded machine, its controls or actuators
- The machine control circuit is not connected to the Output Signal Switching Device (OSSD) outputs at this time (permanent connections will be made following this initial checkout), and that the OSSD leads are isolated (not shorted together, not shorted to power or ground)
- External device monitoring (EDM) has been configured for No Monitoring (SW4 = OFF or 2 CH) and EDM #1 (Y1−Y2) and EDM #2 (Y3−Y4) are jumpered
- Other than EDM and Mute Enable, verify proper Module DIP switch configuration for your application
- All input connections have been made per appropriate sections for the Mute Input Devices (M1−M4), SSI, MSSI, Manual Reset Switch, Mute Lamp, AUX Output, and Override Input

This will allow the Muting Module and the associated safety systems to be checked out, by themselves, before permanent connections are made to the guarded machine.

5.2 Temporary Power and Initial Checkout

Connect the system DC power at terminals A1 (+24V dc) and A2 (0V dc), see "Connection Terminals and Functions-Muting Module" on page 22. All wiring must comply with NEC and local wiring codes.

1. Leaving power to the guarded machine OFF, power up the Module and the safety systems connected to the Muteable Safety Stop Interface (MSSI) and the Safety (Protective) Stop Interface (SSI) inputs.

© Banner Engineering Corp. All rights reserved.

2. Perform system checkout procedures for the external safety systems connected to the MSSI and SSI inputs as described by the appropriate manuals.

   Do not proceed further until all checkout procedures are completed successfully and all problems have been corrected.
3. Verify that the external safety systems are providing a Green/Go signal to the MSSI and SSI inputs (that is, Banner Output Signal Switching Device (OSSD) sourcing signal or a closed contact connected to the Signal pin of each interface). Verify that the green Channel indicators are ON.

   > **NOTE:** If the SSI is not to be used, terminals X5−X6 and X7−X8 must be jumpered (factory default). Do not short Channel A to Channel B. See "SSI and MSSI Interfacing" on page 29.

4. **Auto Reset Configuration:** Verify that the Green status LED is ON, indicating that the OSSD outputs are ON, and that a "—" appears on the Diagnostic Display. If not, or if the Red status indicator begins to flash at any time, see "Troubleshooting" on page 56.
5. **Manual Reset Configuration:** Verify that the amber status LED is flashing to indicate that a reset is being requested, and that a "—" appears on the Diagnostic Display. If not, or if the Red status indicator begins to flash at any time, see "Troubleshooting" on page 56.
6. **Manual Reset Configuration:** Perform a manual reset by closing the Reset input for at least 1/4 second, but not longer than 2 seconds, and then reopening the contact. Verify that the Green status indicator turns on. The Module OSSD outputs should be ON at this time.
7. Cycle the MSSI and the SSI (if used) individually and ensure that the Green status indicator turns OFF, and that a reset is possible after the interface is closed.

   > **IMPORTANT:** If any of the checks in step 1–7 checks fail, do not attempt to use the system until the reason for the failure(s) is identified and corrected.

8. If the Muting function is not used, proceed to "Permanent Wiring to the Guarded Machine-Muting Module" on page 45. If the Muting function is use, continue with step 9.
9. During the initial checkout procedure of the Muting feature, if possible, verify that the power has been removed or is otherwise not available to the machine actuators responsible for hazardous motion. At all times ensure that personnel are not exposed to any hazard.
10. Mute the System by blocking (or activating) both mute devices (typically M1 and M2) simultaneously (within 3 seconds).
11. If used, verify that the Mute indicator turns ON. If not, check the indicator and its wiring, and check the Diagnostic Display for error codes.
12. Generate a stop command from the safeguarding device connected to the MSSI (for example, interrupt the defined area of a safety light screen).
13. Verify that MSSI Channel A and B indicators go OFF, but the Green status indicator remains ON.

    > **NOTE:** If the 30- or 60-second Backdoor Timer feature is selected, the Diagnostic Display will begin to count down in seconds. If the 30-minute Backdoor Timer feature is selected, the timer countdown is in minutes. A flashing dash will appear on the display if the Backdoor Timer is OFF (infinite).

14. Clear the Stop command (before the Backdoor Timer expires) and verify that the MSSI Channel A and B indicators come ON.
15. Clear (deactivate) the mute devices before the Backdoor Timer expires and verify the Mute indicator turns OFF.

    The Green status indicator should remain ON.
16. Verify that it is not possible for a single individual to initiate a mute condition by triggering the mute devices (for example, by blocking both photoelectric beams or actuating both switches) and being able to pass through the safeguard without being detected and without issuing a stop command to the machine. Do not expose any individual to hazard while attempting to mute the system.
17. Verify that it is not possible for personnel to pass in front of, behind, or next to the muted object without being detected and without issuing a stop command to the machine.
18. If one-way (directional) muting has been selected, verify that the system can not be muted by blocking (or activating) M3−M4 before M1−M2. Do not expose any individual to hazard while attempting to mute the system.
19. If all checks have been verified, proceed to "Permanent Wiring to the Guarded Machine-Muting Module" on page 45.

© Banner Engineering Corp. All rights reserved.
www.bannerengineering.com

IMPORTANT: If any of these checks fail, do not attempt to use the system until the reason for the failure(s) is identified and corrected.

© Banner Engineering Corp. All rights reserved.
www.bannerengineering.com

Chapter Contents

6.1 Mute Enable Wiring 50
6.2 External Device Monitoring (EDM) Wiring 50
6.3 Output Signal Switching Device (OSSD) Output Connections 51
6.4 FSD Interfacing Connections 52
6.5 Safety (Protective) Stop Circuits 52
6.6 Commissioning Checkout 52

Chapter 6 Permanent Wiring to the Guarded Machine

Output Signal Switching Device (OSSD) and External Device Monitoring (EDM) Connections and Electrical Interface Supply power, the external reset switch, and other inputs (as required by each application) should be previously connected by this point.

The final connections to be made are:

- Mute enable
- EDM wiring
- OSSD outputs
- FSD interfacing
- MPCE connections

WARNING:

- **Risk of electric shock**
- Use extreme caution to avoid electrical shock. Serious injury or death could result.
- Always disconnect power from the safety system (for example, device, module, interfacing, etc.), guarded machine, and/or the machine being controlled before making any connections or replacing any component. Lockout/tagout procedures might be required. Refer to OSHA 29CFR1910.147, ANSI Z244-1, or the applicable standard for controlling hazardous energy.
- Make no more connections to the device or system than are described in this manual. Electrical installation and wiring must be made by a Qualified Person[7] and must comply with the applicable electrical standards and wiring codes, such as the NEC (National Electrical Code), NFPA 79, or IEC 60204-1, and all applicable local standards and codes.

WARNING:

- **Properly install arc or transient suppressors**
- Failure to follow these instructions could result in serious injury or death.
- Install any suppressors as shown across the coils of the machine primary control elements. Do not install suppressors directly across the output contacts of the safety or interface module. In such a configuration, it is possible for suppressors to fail as a short circuit.

IMPORTANT: Proper Wiring

The generalized wiring configuration shown in "Figure: Generic machine interface wiring: module model MMD-TA-12B, FSD with Two-Channel EDM" on page 46, "Figure: Generic machine interface wiring, model MMD-TA-12B: interface module with two-channel EDM" on page 47, "Figure: Generic machine interface wiring, model MMD-TA-12B: interface module with one-channel EDM" on page 48, "Figure: Generic machine interface wiring, model MMD-TA-11B: MPCE with 2-channel EDM" on page 49, and "Figure: Generic machine interface wiring, model MMD-TA-11B: MPCE with 1-channel EDM" on page 49 are provided only to illustrate the importance of proper installation. The proper wiring of the Safety system to any particular machine is the sole responsibility of the installer and end user.

[7] A person who, by possession of a recognized degree or certificate of professional training, or who, by extensive knowledge, training and experience, has successfully demonstrated the ability to solve problems relating to the subject matter and work.

© Banner Engineering Corp. All rights reserved.
www.bannerengineering.com

Figure 30. Generic machine interface wiring: module model MMD-TA-12B, FSD with Two-Channel EDM

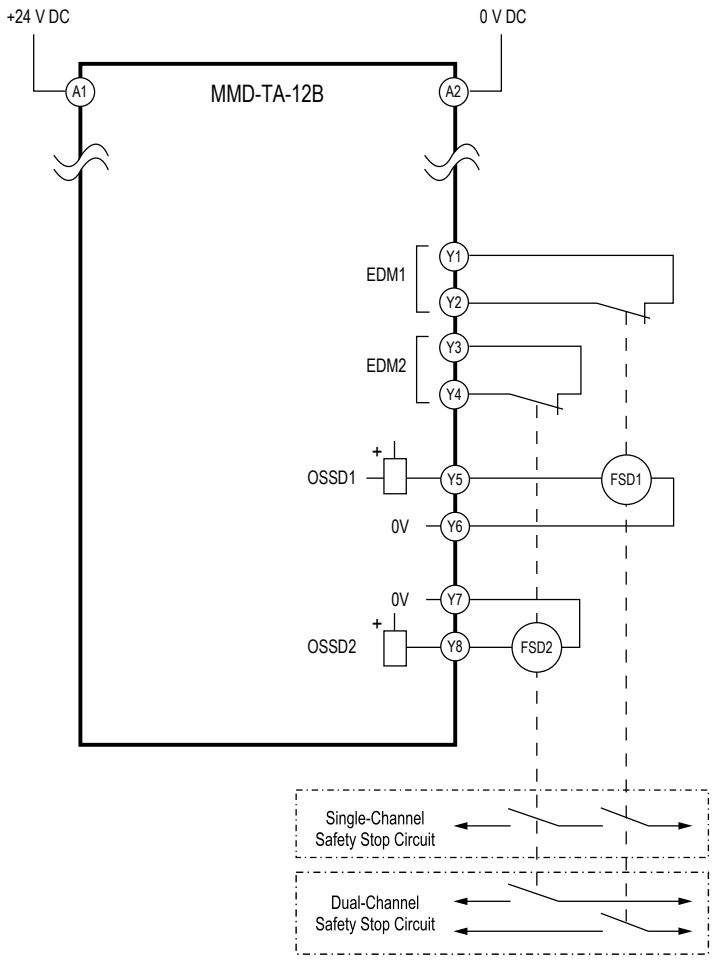

© Banner Engineering Corp. All rights reserved.
www.bannerengineering.com

Figure 31. Generic machine interface wiring, model MMD-TA-12B: interface module with two-channel EDM

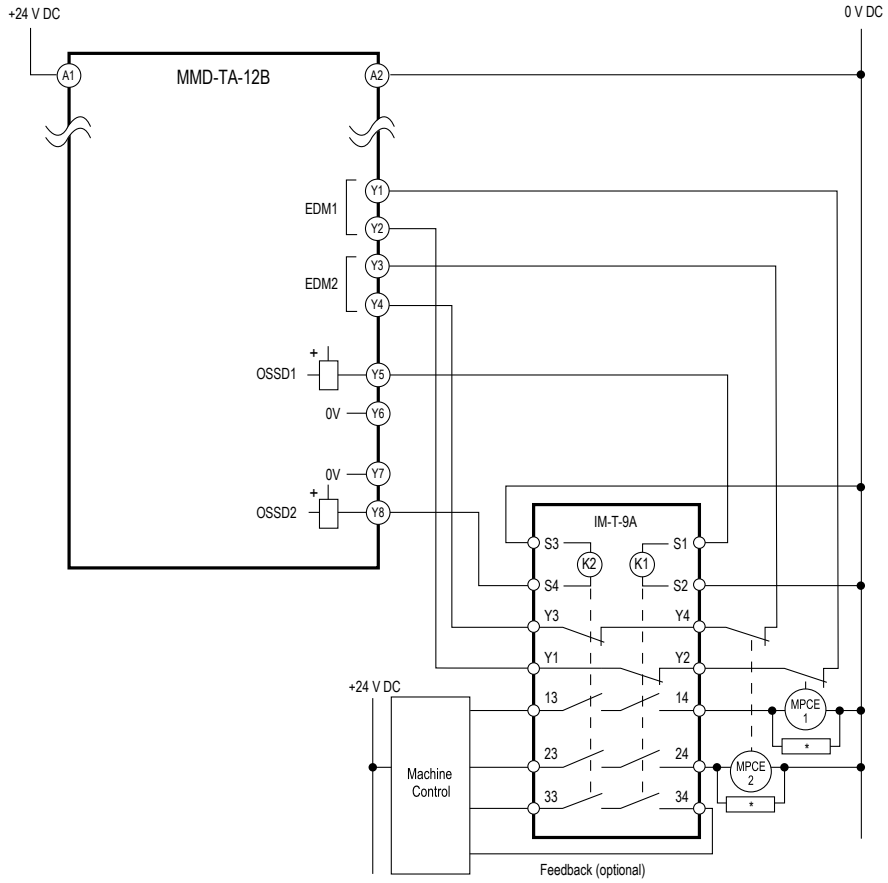

* Installation of transient (arc) suppressors across the coils of MPCE1 and MPCE2 is recommended (see Warning)

© Banner Engineering Corp. All rights reserved.
www.bannerengineering.com

Figure 32. Generic machine interface wiring, model MMD-TA-12B: interface module with one-channel EDM

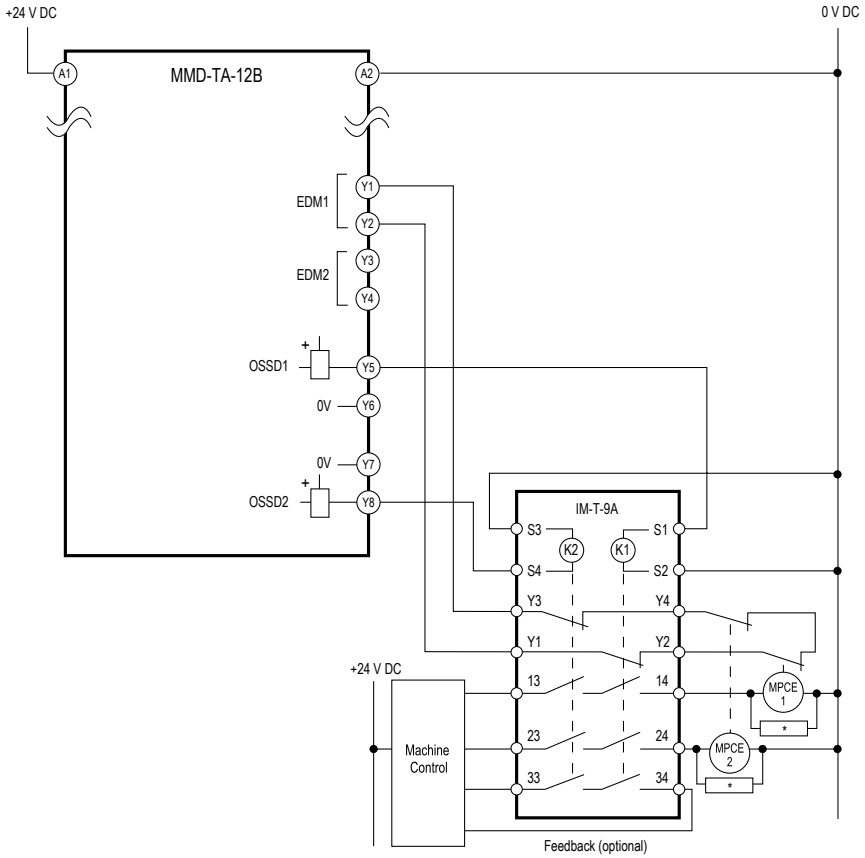

* Installation of transient (arc) suppressors across the coils of MPCE1 and MPCE2 is recommended (see Warning)

© Banner Engineering Corp. All rights reserved.
www.bannerengineering.com

Figure 33. Generic machine interface wiring, model MMD-TA-11B: MPCE with 2-channel EDM

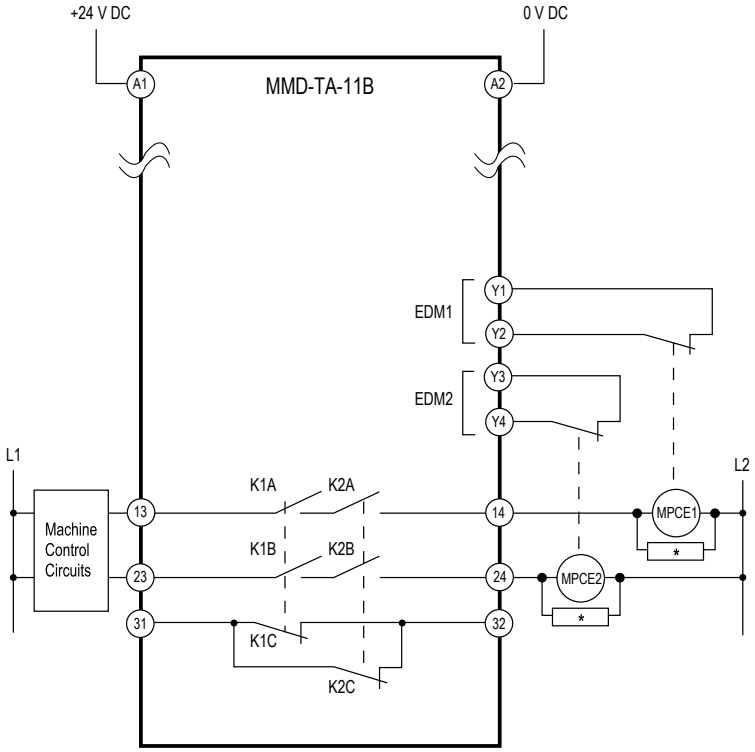

* Installation of transient (arc) suppressors across the coils of MPCE1 and MPCE2 is recommended (see Warning)

Figure 34. Generic machine interface wiring, model MMD-TA-11B: MPCE with 1-channel EDM

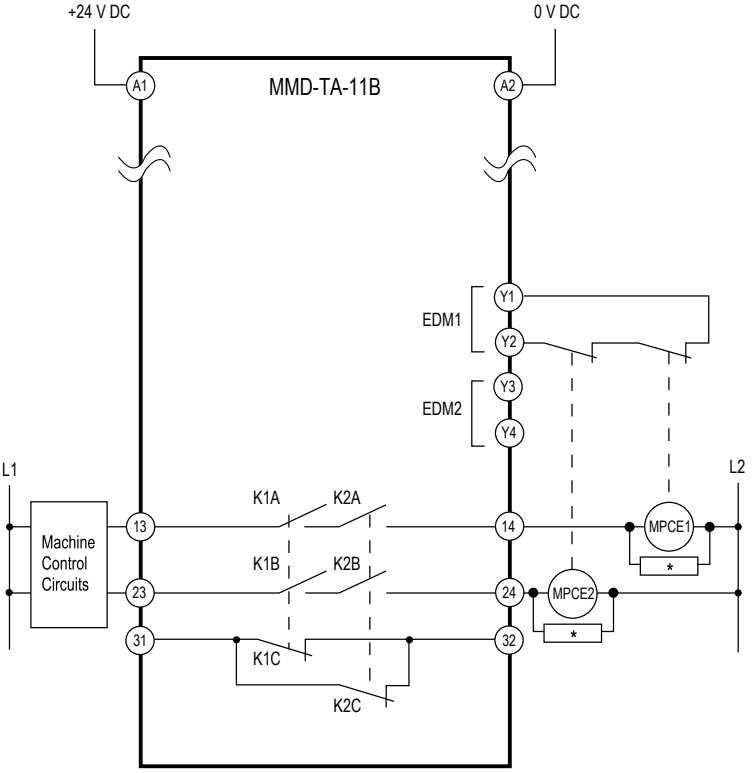

* Installation of transient (arc) suppressors across the coils of MPCE1 and MPCE2 is recommended (see Warning)

© Banner Engineering Corp. All rights reserved.
www.bannerengineering.com

6.1 Mute Enable Wiring

The Module provides a Mute Enable input (ME, X13−X14) for the connection of a potential free contact. Mute Enable gives the user the ability to frame or create a window of opportunity when a mute can occur. When configured, the Mute Enable input is a contact that must be closed before the safeguard can be muted. After the safeguard is muted, opening of the Mute Enable input has no effect, but it must be re-closed before the safeguard can be muted again.

To connect a device (sensor or PLC output) with a solid-state output, see optional wiring in "Figure: Mute Enable Wiring" on page 50.

If Mute Enable is not to be used, leave the factory-installed jumper between X13–X14.

Figure 35. Mute Enable Wiring

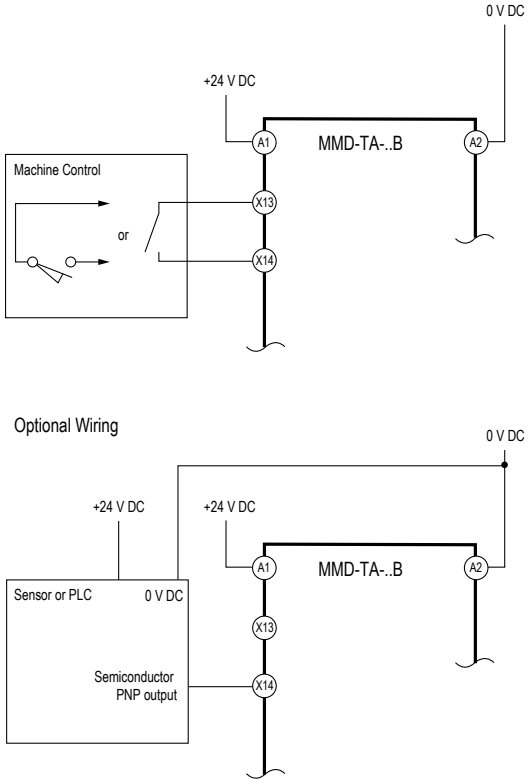

6.2 External Device Monitoring (EDM) Wiring

The Module provides connection terminals for the External Device Monitoring input (EDM #1—Y1−Y2 and EDM #2—Y3−Y4).

External Device Monitoring must be wired in one of three configurations:

- One-Channel Monitoring — SW4 Banks A and B = ON or 1 CH (see "Figure: Generic machine interface wiring, model MMD-TA-12B: interface module with one-channel EDM" on page 48 and "Figure: Generic machine interface wiring, model MMD-TA-11B: MPCE with 1-channel EDM" on page 49)

  NOTE: EDM #2 input must be left open.

- Two-Channel Monitoring — SW4 Banks A and B = OFF or 2 CH (see "Figure: Generic machine interface wiring: module model MMD-TA-12B, FSD with Two-Channel EDM" on page 46, "Figure: Generic machine interface wiring, model MMD-TA-12B: interface module with two-channel EDM" on page 47, "Figure: Generic machine interface wiring, model MMD-TA-11B: MPCE with 2-channel EDM" on page 49)
- No Monitoring — SW4 Banks A and B = OFF or 2 CH

© Banner Engineering Corp. All rights reserved.
www.bannerengineering.com

NOTE: Terminal Y1 of EDM #1 must be jumpered to Y3 of EDM #2 for no EDM monitoring.

After the initial checkout has been successfully completed, the EDM configuration that disabled the monitoring function must be properly reconfigured. The External Device Monitoring inputs then must be properly connected to the closed monitoring contacts of the MPCEs (see "External Device Monitoring (EDM)-Muting Module" on page 10). Refer to the important note, below, regarding MPCE Monitoring Wiring, and "Figure: Generic machine interface wiring: module model MMD-TA-12B, FSD with Two-Channel EDM" on page 46, "Figure: Generic machine interface wiring, model MMD-TA-12B: interface module with two-channel EDM" on page 47, "Figure: Generic machine interface wiring, model MMD-TA-12B: interface module with one-channel EDM" on page 48, "Figure: Generic machine interface wiring, model MMD-TA-11B: MPCE with 2-channel EDM" on page 49, and "Figure: Generic machine interface wiring, model MMD-TA-11B: MPCE with 1-channel EDM" on page 49.

WARNING:
- External Device Monitoring (EDM)
- Creating a hazardous situation could result in serious injury or death.
- If the application does not require this function, the terminal Y1 of EDM #1 must be jumpered to Y3 of EDM #2. It is the user's responsibility to ensure that this does not create a hazardous situation.

IMPORTANT: Regarding External Device Monitoring Wiring
It is strongly recommended that one normally closed, forced-guided, monitoring contact of each MPCE or external device be wired in order to monitor the state of the MPCEs (as shown in "Figure: Generic machine interface wiring: module model MMD-TA-12B, FSD with Two-Channel EDM" on page 46, "Figure: Generic machine interface wiring, model MMD-TA-12B: interface module with two-channel EDM" on page 47, "Figure: Generic machine interface wiring, model MMD-TA-12B: interface module with one-channel EDM" on page 48, "Figure: Generic machine interface wiring, model MMD-TA-11B: MPCE with 2-channel EDM" on page 49, and "Figure: Generic machine interface wiring, model MMD-TA-11B: MPCE with 1-channel EDM" on page 49). If this is done, proper operation of the MPCEs will be verified. MPCE monitoring contacts must be used in order to maintain control reliability.

6.3 Output Signal Switching Device (OSSD) Output Connections

Both of the OSSD outputs must be connected to the machine control such that the machine's safety related control system interrupts the circuit or power to the machine primary control element(s) (MPCE), resulting in a nonhazardous condition. This applies equally to the safety relays of the model MMD-TA-11B and the solid-state output of the model MMD-TA-12B.

Final Switching Devices (FSDs) typically accomplish this when the OSSDs go to an OFF state. See "Figure: Generic machine interface wiring: module model MMD-TA-12B, FSD with Two-Channel EDM" on page 46.

See the output specifications and Warning below before making OSSD connections and interfacing the Muting Module to the machine.

WARNING: OSSD Interfacing
To ensure proper operation, the Muting Module output parameters and machine input parameters must be considered when interfacing the Muting Module solid-state OSSD outputs to the machine inputs.

Machine control circuitry must be designed so that:
- The maximum cable resistance value between the Muting Module solid-state safety outputs and the machine inputs is not exceeded
- The Muting Module solid-state safety output maximum OFF-state voltage does not result in an ON condition
- The Muting Module solid-state safety output maximum leakage current, due to the loss of 0V, will not result in an ON condition

Failure to properly interface the OSSD outputs to the guarded machine could result in serious bodily injury or death.

© Banner Engineering Corp. All rights reserved.
www.bannerengineering.com

6.4 FSD Interfacing Connections

The final switching device(s) (FSDs) take many forms. The most common are forced-guided devices, mechanically linked relays, or interface modules. The mechanical linkage between the contacts allows the device to be monitored by the external device monitoring (EDM) circuit for certain failures.

Depending on the application, the use of FSDs can facilitate controlling voltage and current that differs from the output signal switching device (OSSD) outputs of the Muting Module. FSDs can also be used to control an additional number of hazards by creating multiple safety stop circuits.

6.5 Safety (Protective) Stop Circuits

Typically, safety stop circuits are either single channel (a series connection of at least two N.O. contacts); or dual channel (a parallel connection of two N.O. contacts). In either method, the safety function relies on the use of redundant contacts to control a single hazard, so that if one contact fails ON, the second contact will arrest the hazard and prevent the next cycle from occurring.

Interfacing safety stop circuits must be wired so that the safety function cannot be suspended, overridden, or defeated, unless accomplished in a manner at the same or greater degree of safety as the machine's safety-related control system that includes the Muting Module.

The NO outputs from an interfacing module are a series connection of redundant contacts that form safety stop circuits and can be used in either single-channel or dual-channel control methods.

Dual-Channel Control—dual-channel (or two-channel) control has the ability to electrically extend the safe switching point beyond the FSD contacts. With proper monitoring, such as EDM, this method of interfacing is capable of detecting certain failures in the control wiring between the safety stop circuit and the MPCEs. These failures include a short-circuit of one channel to a secondary source of energy or voltage, or the loss of the switching action of one of the FSD outputs, which may lead to the loss of redundancy or a complete loss of safety if not detected and corrected.

The possibility of a wiring failure increases:

- As the physical distance between the FSD safety stop circuits and the MPCEs increase
- As the length or the routing of the interconnecting wires increases
- If the FSD safety stop circuits and the MPCEs are located in different enclosures

Thus, dual-channel control with EDM monitoring should be used in any installation where the FSDs are located remotely from the MPCEs.

Single-Channel Control—single-channel (or one-channel) control uses a series connection of FSD contacts to form a safe switching point. After this point in the machine's safety-related control system, failures that would result in the loss of the safety function can occur, for example, a short-circuit to a secondary source of energy or voltage.

Thus, this method of interfacing should be used only in installations where FSD safety stop circuits and the MPCEs are physically located within the same control panel, adjacent to each other, and are directly connected to each other; or where the possibility of such a failure can be excluded. If this cannot be achieved, then two-channel control should be used.

Methods to exclude the possibility of these failures include, but are not limited to:

- Physically separating interconnecting control wires from each other and from secondary sources of power
- Routing interconnecting control wires in separate conduit, runs, or channels
- Routing interconnecting control wires with low voltage or neutral that cannot result in energizing the hazard
- Locating all elements (modules, switches, devices under control, etc.) within the same control panel, adjacent to each other, and directly connected with short wires
- Properly installing multi-conductor cabling and multiple wires that pass through strain-relief fittings. Over-tightening of a strain-relief can cause short circuits at that point
- Using positive-opening or direct-drive components installed and mounted in a positive mode

6.6 Commissioning Checkout

After power is connected to the Muting Module, the External device monitoring (EDM) has been properly configured, and the Output Signal Switching Device (OSSD) outputs have been connected to the machine to be guarded, the operation of the Muting Module with the guarded machine must be verified before the combined system may be put into service. To do this, a

© Banner Engineering Corp. All rights reserved.

Qualified Person must perform the Commissioning Checkout Procedure described in "Commissioning Checkout-Muting Module" on page 60.

© Banner Engineering Corp. All rights reserved.

Chapter Contents

7.1 Security Protocol 54
7.2 Periodic Checkout Requirements 54
7.3 Normal Operation 54

Chapter 7 Operating Instructions

7.1 Security Protocol

The Module must be mounted inside a lockable enclosure or cabinet rated IP54 or better, both to protect the Module from environmental conditions and in order to prevent access by unauthorized personnel, if required by applicable standards.

The key (or combination) to the enclosure should be kept in the possession of a Qualified Person and only they should have access to the configuration switches. A Qualified Person is defined as an individual who, by possession of a recognized degree or certificate of professional training, or who, by extensive knowledge, training, and experience, has successfully demonstrated the ability to solve problems relating to the subject matter and work.

7.2 Periodic Checkout Requirements

In addition to the checkouts that are performed by a Qualified Person or persons at the time that the Module is installed and put into service, the functioning of the safeguarding and the machine must be verified on a regular periodic basis to ensure proper operation. This is absolutely vital and necessary. Failure to ensure proper operation can lead to serious injury or death.

See "Periodic Checkout Procedure-Muting Module" on page 59 for checkout schedules and procedures.

WARNING:

- **Test the safeguarding function and verify proper operation**
- Failure to test the safeguarding function at appropriate intervals, verify proper operation, and to correct problems can lead to the loss of the safety function and an increased risk of harm.
- A machine or automatic test of the Banner Engineering Corp. device and its interface might be required as determined by a risk assessment and applicable standard, for example, ISO 14121 and EN ISO 13849-1.
- Verify that the Banner Engineering Corp. device and the guarded machine perform as outlined in the checkout procedures and any problem(s) are found and corrected. The user is responsible to perform such checks on a regular basis and before the system is returned to service.

7.3 Normal Operation

During normal operation, the Module's three status indicators (red, green and amber) are as shown in "Muting module status indicator conditions" on page 55. In addition, green and amber indicators adjacent to each of the Module's inputs/interfaces come ON to verify an active state of that circuit.

During normal operation, the Diagnostic Display will read "—" (solid or, if during the mute cycle, flashing). If the 30-or 60 second Backdoor Timer feature is selected, the Diagnostic Display will begin to count down in seconds. If the 30-minute Backdoor Timer feature is selected, the timer countdown is in minutes. A flashing dash will appear on the display if the Backdoor Timer is OFF (infinite). If the Red status indicator begins to flash, the number that appears in the Display signifies an error; see "Diagnostic Display-Muting Module" on page 56 for more information.

See "Manual Reset Switch-Muting Module" on page 25 for information on the reset routine.

© Banner Engineering Corp. All rights reserved.
www.bannerengineering.com

Table 1. Muting module status indicator conditions

	Waiting for Reset[8]	Output OFF	Output ON	Override	Lockout
Red	ON	ON	OFF	ON	Flashing
Green	OFF	OFF	ON	ON	OFF
Amber	Flashing	ON	OFF	OFF	OFF

WARNING:

- **Lockouts and power failures indicate a problem**
- Attempts to continue to operate machinery by bypassing the Banner Engineering Corp. device or other safeguards is dangerous and could result in serious injury or death.
- A Qualified Person[9] must immediately investigate the problem.

[8] If either Mutable Safety Stop Interface (MSSI) or Safety (Protective) Stop Interface (SSI) set to MANUAL, the red Status LED will be OFF at power-up.
[9] A person who, by possession of a recognized degree or certificate of professional training, or who, by extensive knowledge, training and experience, has successfully demonstrated the ability to solve problems relating to the subject matter and work.

© Banner Engineering Corp. All rights reserved.
www.bannerengineering.com

Chapter Contents

8.1 Troubleshooting Lockout Conditions 56
8.2 Diagnostic Display 56
8.3 Effects of Electrical Noise 56
8.4 Troubleshooting Conditions, using the Module's Diagnostic Display 56

Chapter 8 Troubleshooting

8.1 Troubleshooting Lockout Conditions

A lockout condition causes the Output Signal Switching Device (OSSD) outputs to turn OFF, sending a stop signal to the guarded machine. A lockout condition is indicated by the Red status indicator flashing and an error code appearing in the Diagnostic Display. To clear a lockout condition, the failure must be corrected, the associated input must be properly cycled (if fault was due to an input failure), or a reset routine must be performed.

To perform a reset, close the reset input, hold closed for at least 1/4 second, but no longer than 2 seconds, and then re-open the input.

8.2 Diagnostic Display

The Module's Diagnostic Display is useful for monitoring the safeguarding system and for quickly diagnosing problems. See "Troubleshooting Conditions Using the Module's Diagnostic Display-Muting Module" on page 56 for a list of status codes and their meanings, along with recommended corrective actions.

8.3 Effects of Electrical Noise

The Module is designed and manufactured to be highly resistant to electrical noise and to operate reliably in industrial settings. However, serious electrical noise may cause a random lockout condition.

Check the following if a noise-related error code is displayed and other remedies have not cleared the problem: sensor wires or input/output wires routed too close to noisy wiring.

In extreme conditions, it may be necessary to use shielded cabling or relocate the Module, mute devices, and cabling away from the source of the noise.

8.4 Troubleshooting Conditions, using the Module's Diagnostic Display

Status Error Code	Condition/Error Type/Action
— (Solid)	System OK
— (Flashing)	Mute Cycle
31	Output Signal Switching Device (OSSD) Output Error • One OSSD is shorted to power/ground • OSSDs are shorted together
32	Reset Input Error • Reset input shorted/closed
33	Module Error • Excessive EMI/RFI noise • Internal failure, replace Module

Continued on page 57

© Banner Engineering Corp. All rights reserved.
www.bannerengineering.com

Continued from page 56

Status Error Code	Condition/Error Type/Action
34	Muteable Safety Stop Interface (MSSI) Error[10] • One or both channels shorted to power or ground • Input channels shorted together • One channel did not open • Failed simultaneity (>3 s) • Excessive EMI/RFI noise
35	Override Error • Override input closed at power-up • Check Override input wiring and connector • Excessive EMI/RFI noise
36	Mute Lamp Error • Check/replace lamp (open or short) • Check wiring and connector • Check DIP switch settings
37	DIP switch Error • Check DIP switch settings • Replace Module
38	External device monitoring (EDM) 1 Error • Check wiring • Check operation of device(s) under control • Check DIP switch settings • Switching transition > 200 ms • Excessive EMI/RFI noise • EDM remains open > 200 ms after OSSDs go OFF (if dropout time verification check on) • EDM not closed at startup
39	EDM 2 Error • Verify that input 2 is open (single-channel EDM selected) • Check wiring • Check operation of device(s) under control • Check DIP switch settings • Excessive EMI/RFI noise • EDM not closed at startup (Y3–Y4)
40	2-Channel EDM Error • Check wiring • Check operation of device(s) under control • Failed simultaneity between EDM1 and EDM2 (> 200 ms) • Both EDM open > 200 ms after OSSDs go OFF • Replace Module
50	Backdoor Timer Expired • Check muting device operation • Check muting device wiring • Check DIP switch settings • See "Backdoor Timer" on page 11
51	Mute Timing (Simultaneity) Error • The second mute device of a pair (M1–M2 or M3–M4) did not actuate within 3 seconds of the first device • Check muting device operation • Check wiring
52	Mute Enable (ME) Open Error • ME input was open when a mute cycle was attempted • Check Mute Enable wiring

Continued on page 58

[10] Fault is cleared by cycling the input from open-to-closed.

© Banner Engineering Corp. All rights reserved.
www.bannerengineering.com

Continued from page 57

Status Error Code	Condition/Error Type/Action
61	Safety (Protective) Stop Interface (SSI) Input Error[10] • One or both channels shorted to power or ground • Input channels shorted together • One channel did not open • Failed simultaneity (> 3 s) • Excessive EMI/RFI noise
Flashing Mute Lamp	Override Condition

© Banner Engineering Corp. All rights reserved.
www.bannerengineering.com

Chapter Contents

9.1 Schedule of Checkouts 59
9.2 Commissioning Checkout..... 60
9.3 Daily Checkout 62
9.4 Semi-Annual Checkout..... 62

Chapter 9 Periodic Checkout Procedure

Study each procedure from beginning to end before you start to make sure that you understand each step. Refer all questions to Banner Engineering. Perform checkouts as detailed in "Schedule of Checkouts-Muting Module" on page 59. Record results and keep them in the appropriate place (for example, near the machine, and/or in a technical file).

Banner Engineering highly recommends performing the System checkouts as described. However, a Qualified Person (or team) should evaluate these generic recommendations, considering their specific application, and determine the appropriate frequency of checkouts. This will generally be determined by a risk assessment, such as the one contained in ANSI B11.0. The result of the risk assessment will drive the frequency and content of the periodic checkout procedures and must be followed.

9.1 Schedule of Checkouts

Checkout Procedure	When to Perform	Where to Find the Procedure	Who Must Perform the Procedure
Initial Checkout	At installation Any time the System, the guarded machine, or any part of the application is installed or altered	See "Machine Interface - Initial Wiring and Checkout-Muting Module" on page 42	Qualified Person
Commissioning Checkout	After installation Whenever changes are made to the system (either a new configuration of the safety system that includes the MMD-TA-1..B module or changes to the machine)	See "Commissioning Checkout-Muting Module" on page 60	Qualified Person
Daily Checkout	At each shift change Machine setup change Whenever the System is powered up At least daily	See "Daily Checkout" on page 62	Designated Person or Qualified Person
Semi-Annual Checkout	Every six months, following System installation	See "Semi-Annual Checkout" on page 62	Qualified Person

WARNING:
- **Do not use the system until the checkouts are verified**
- Attempts to use the guarded/controlled machine before these checks are verified could result in serious injury or death.
- If all these checks cannot be verified, do not attempt to use the safety system that includes the Banner Engineering Corp. device and the guarded/controlled machine until the defect or problem has been corrected.

WARNING:
- **Clear the guarded area before applying power or resetting the system**
- Failure to clear the guarded area before applying power could result in serious injury or death.
- Verify that the guarded area is clear of personnel and any unwanted materials before applying power to the guarded machine or before resetting the system.

© Banner Engineering Corp. All rights reserved.
www.bannerengineering.com

9.2 Commissioning Checkout

Perform this checkout procedure as part of Safeguarding System installation (after the System has been interfaced to the guarded machine as described in "Machine Interface - Initial Wiring and Checkout-Muting Module" on page 42 and "Permanent Wiring to the Guarded Machine-Muting Module" on page 45), or whenever changes are made to the System (either a new configuration of the Module, devices connected to it, or changes to the machine). A Qualified Person (as defined in the Safety Glossary) must perform the procedure; checkout results should be recorded and kept on or near the guarded machine, per OSHA 1910.217(e)(1).

To prepare the Module for this checkout, ensure the configuration is as it will be during machine operation.

9.2.1 Safeguarding Checkout

1. Examine the guarded machine to verify that it is of a type and design compatible with the safeguarding system that has been installed.
2. Verify the system(s) checkout procedures for the external safety systems connected to the Muteable Safety Stop Interface (MSSI) and the Safety (Protective) Stop Interface (SSI) inputs as described by the appropriate manuals.

   IMPORTANT: Do not proceed until all checkout procedures are completed successfully and all problems have been corrected.

3. Verify that:
   - Access to any dangerous parts of the guarded machine is not possible from any direction not protected by the safeguarding system, hard guarding, or supplemental safeguarding, and that
   - Supplemental safeguarding and hard guarding, as described by the appropriate safety standards, are in place and functioning properly.
4. Verify that the Reset switch is mounted outside the guarded area, out of reach of anyone inside the guarded area, and that means of preventing inadvertent use is in place.
5. Examine the electrical wiring connections between the Module's Output Signal Switching Device (OSSD) outputs and the guarded machine's control elements to verify that the wiring meets the requirements stated in "Permanent Wiring to the Guarded Machine-Muting Module" on page 45.
6. Apply power to the Module.
7. Ensure that power to the guarded machine is OFF.
8. Verify that the external safety systems are providing a green/Go signal to the MSSI and SSI inputs, and that the green MSSI and SSI indicators (two pairs of LEDs located near each terminal) are ON.

   When configured for Manual Reset, the amber status indicator will be flashing.
9. Perform a manual reset (close the Reset switch for 1/4 to 2 seconds, then open the switch).
10. Verify that the green status indicator is ON.

    NOTE: A red flashing status indicator signifies a lockout condition. See "Troubleshooting" on page 56 for information.

11. In a non-muted condition, generate a stop command from the safeguarding device connected to the MSSI (for example, interrupt the defined area of a safety light screen).
12. Verify that MSSI Channel A and B and the green status indicators go OFF.
13. In order, reset the safeguard and then the Module (in Manual Reset).
14. Generate a stop command from the safeguarding device connected to the SSI (for example, actuate E-stop button).
15. Verify that SSI Channel A and B and the green status indicators go OFF.
16. In order, reset the safeguard and then the Module (in Manual Reset).
17. Apply power to the guarded machine and verify that the machine does not start up.
18. Generate a stop command from the safeguarding device connected to the SSI and the MSSI in a non-muted condition.
19. Verify that it is not possible for the guarded machine to be put into motion while either stop commands are present.
20. In order, reset the safeguard and then the Module (in Manual Reset).

© Banner Engineering Corp. All rights reserved.
www.bannerengineering.com

21. Initiate machine motion of the guarded machine and, while it is moving, as in step 18 above, generate a stop command from each safeguarding device.

    Do not attempt to insert anything into the dangerous parts of the machine.

    Upon issuing the stop command, the dangerous parts of the machine should come to a stop with no apparent delay.
22. Upon reset of the safeguard and the Module, verify that the machine does not automatically restart, and that the initiation devices must be engaged to restart the machine.
23. Remove electrical power to the Module.

    All OSSD outputs should immediately turn OFF, and should not be capable of turning ON until power is re-applied and a reset is accomplished.
24. Test the machine stopping response time, using an instrument designed for that purpose, to verify that it is the same or less than the overall system response time specified by the machine manufacturer.

    Banner Engineering may be able to recommend a suitable instrument.

    > **IMPORTANT:** Do not continue operation until the entire checkout procedure is complete and all problems are corrected.

25. Continue with "Muting Checkout-Muting Module" on page 61GUID-9209B1D5-F36D-4F98-A43F-99432ED4AFBF.

9.2.2 Muting Checkout

After "Safeguarding Checkout-Muting Module" on page 60, perform the Muting Checkout.

1. Verify that the Module has been reset and the green status indicator is ON.

   If the amber status indicator is flashing (indicating the safety system that includes the MMD-TA-1..B module is waiting for a reset of a latched condition), perform a manual reset. At any time, if the red status indicator begins to flash, a lockout condition exists. See "Troubleshooting Lockout Conditions-Muting Module" on page 56 to determine the cause of the lockout.

   > **IMPORTANT:** During this procedure, at all times ensure that personnel are not exposed to any hazard.

2. Mute the system by blocking (or activating) both mute devices (typically M1−M2) simultaneously (within 3 seconds).
3. Verify that the Mute indicator turns ON.

   If the Mute indicator does not turn on, check the indicator and its wiring, verify that the mute enable input is closed, and check the Diagnostic Display for error codes.
4. Generate a stop command from the safeguarding device connected to the Muteable Safety Stop Interface (MSSI); verify the green MSSI channel indicators are OFF and the green status indicator is ON.

   > **NOTE:** If the Backdoor Timer feature has been selected, the Diagnostic Display will begin to count down; otherwise a flashing dash will appear on the display.

5. Clear or reset the safeguard (before the Backdoor Timer expires) and verify the green MSSI channel indicators are ON.
6. Clear (deactivate) the mute devices before the Backdoor Timer expires and verify the Mute indicator goes OFF.

   The green status indicator should remain ON.
7. Verify that it is not possible for a single individual to initiate a mute condition by triggering the mute devices (for example, by blocking both photoelectric beams or actuating both switches) and access the hazard without being detected and issuing a stop command to the machine (where the green status indicator goes OFF, and a reset of the latch condition is required).

   Do not expose any individual to hazard while attempting to mute the system.
8. Verify that it is not possible for personnel to pass in front of, behind, or next to the muted object without being detected and without issuing a stop command to the machine.
9. If one-way (directional) muting has been selected, verify that the system cannot be muted by blocking (or activating) M3−M4 before M1−M2.

   Do not expose any individual to hazard while attempting to mute the system.

© Banner Engineering Corp. All rights reserved.
www.bannerengineering.com

IMPORTANT: If any of these checks fail, do not attempt to use the safety system that includes the MMD-TA-1..B module until the reason for the failure(s) is identified and corrected.

9.3 Daily Checkout

Perform this checkout procedure at every shift change, power-up, and machine set-up change.

During continuous machine run periods, this checkout must be performed at intervals not to exceed 24 hours. A Designated Person or Qualified Person must perform the procedure; checkout results should be recorded and kept on or near the guarded machine, per OSHA 1910.217(e)(1).

1. Verify that access to the guarded area is not possible from any area not protected by the safeguards interfaced with the safety system that includes the MMD-TA-1..B module.

   Hard guarding, or supplemental presence-sensing devices, must be installed, wherever needed, to prevent any person from reaching around the light grid or entering into the hazard area. Verify that all supplemental guarding devices and hard guarding are in place and operating properly.
2. Verify that the safeguards interfaced with the safety system that includes the MMD-TA-1..B module have been properly installed and maintained. See relevant instruction manuals or data sheets.
3. Verify that it is not possible for a person to access the hazard(s), undetected by the safeguards interfaced with the safety system that includes the MMD-TA-1..B module or by other supplemental guarding (as described in appropriate standards).
4. Verify that the Reset switch is mounted outside the guarded area, out of reach of anyone inside the guarded area, and that the key or other means of preventing inadvertent use is in place.
5. Verify the system(s) checkout procedures for the external safety systems connected to the Muteable Safety Stop Interface (MSSI) and the Safety (Protective) Stop Interface (SSI) inputs as described by the appropriate manuals.
6. Initiate machine motion of the guarded machine and, during the cycle, generate a stop command from the safeguarding device. Do not attempt to insert anything into the dangerous parts of the machine. Upon issuing the stop command, the dangerous parts of the machine should come to a stop with no apparent delay. Upon reset of the safeguard and the Module, verify that the machine does not automatically restart, and that the initiation devices must be engaged to restart the machine.
7. With the guarded machine at rest, generate a stop command from the safeguarding device(s) and verify that it is not possible for the guarded machine to be put into motion.
8. Check carefully for external signs of damage or changes to the safety system that includes the MMD-TA-1..B module, the interfaced safeguards, the guarded machine, and their electrical wiring. Immediately report any damage or changes found to management.

IMPORTANT: If any of these checks fail, do not attempt to use the safety system that includes the MMD-TA-1..B module until the reason for the failure(s) is identified and corrected.

9.4 Semi-Annual Checkout

Perform this checkout procedure every six months following the safety system that includes the MMD-TA-1..B module installation.

A Qualified Person must perform the procedure; checkout results should be recorded and kept on or near the guarded machine, per OSHA 1910.217(e)(1).

1. Perform the commissioning checkout procedure ("Commissioning Checkout-Muting Module" on page 60).

   If any decrease in machine braking ability has occurred, make the necessary clutch/brake repairs, readjust safeguard separation distance (Ds) appropriately, record the new Ds calculation, and re-perform the Daily Checkout procedure.
2. Examine and test the machine primary control elements (MPCEs) and any intermediary controls (such as interface modules) to verify that they are functioning correctly and are not in need of maintenance or replacement.
3. Inspect the guarded machine to verify that no other mechanical or structural problems could prevent the machine from stopping or assuming an otherwise safe condition when signaled to do so by the safety system that includes the MMD-TA-1..B module.
4. Examine and inspect the machine controls and connections to the safety system that includes the MMD-TA-1..B module to verify that no modifications have been made that adversely affect the System.

© Banner Engineering Corp. All rights reserved.
www.bannerengineering.com

IMPORTANT: If any of these checks fail, do not attempt to use the safety system that includes the MMD-TA-1..B module until the reason for the failure(s) is identified and corrected.

© Banner Engineering Corp. All rights reserved.
www.bannerengineering.com

Chapter Contents

10.1 Muting Sequence with Two Muting Devices 64
10.2 DIP Switch Configuration[11] 64
10.3 Muting Sequence with Four Muting Devices 65
10.4 **DIP Switch Configuration**[12] 65

Chapter 10 Mute Timing Sequences

10.1 Muting Sequence with Two Muting Devices

For example, X-pattern Entry/Exit System, see "Figure: X-Pattern Entry/Exit system using two pairs of opposed-mode photoelectric muting devices" on page 67.

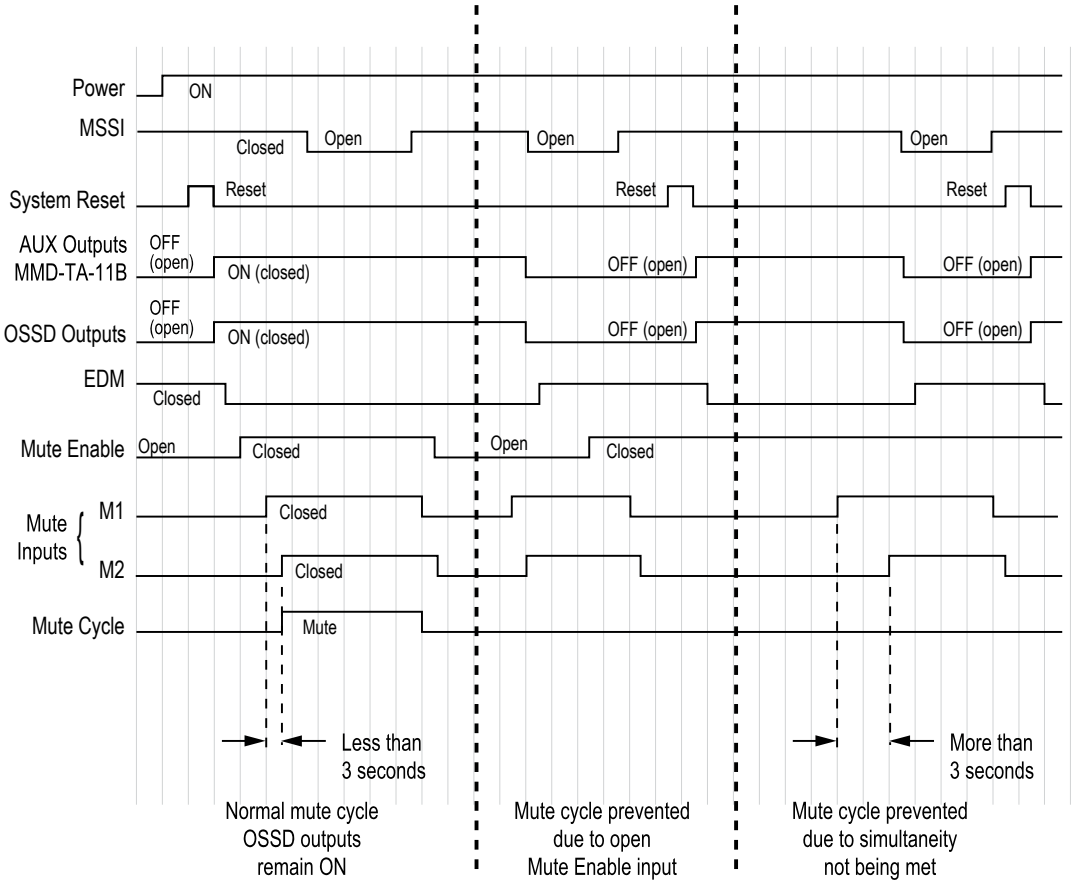

10.2 DIP Switch Configuration[13]

MSSI Auto or Manual Reset . . . SW1 = OFF (Manual)

SSI Auto or Manual Reset . . . . SW2 = OFF (Manual) or ON (Auto)

One-Way Muting . . . . . SW3 = OFF (1-way)

Two-/One-Channel EDM . . . . . SW4 = OFF (2 CH)

[11] Both DIP switch banks A and B.
[12] Both DIT switch banks A and B.
[13] Both DIP switch banks A and B.

© Banner Engineering Corp. All rights reserved.
www.bannerengineering.com

Backdoor Timer . . . . . SW5&6 = OFF (30 sec.)

Monitored Muting Lamp . . . . . SW7 = OFF (Mon)

Mute on Power-up . . . . . SW8 = OFF (Disable)

10.3 Muting Sequence with Four Muting Devices

For example, an Entry/Exit System using four photoelectric devices. See "" on page 68.

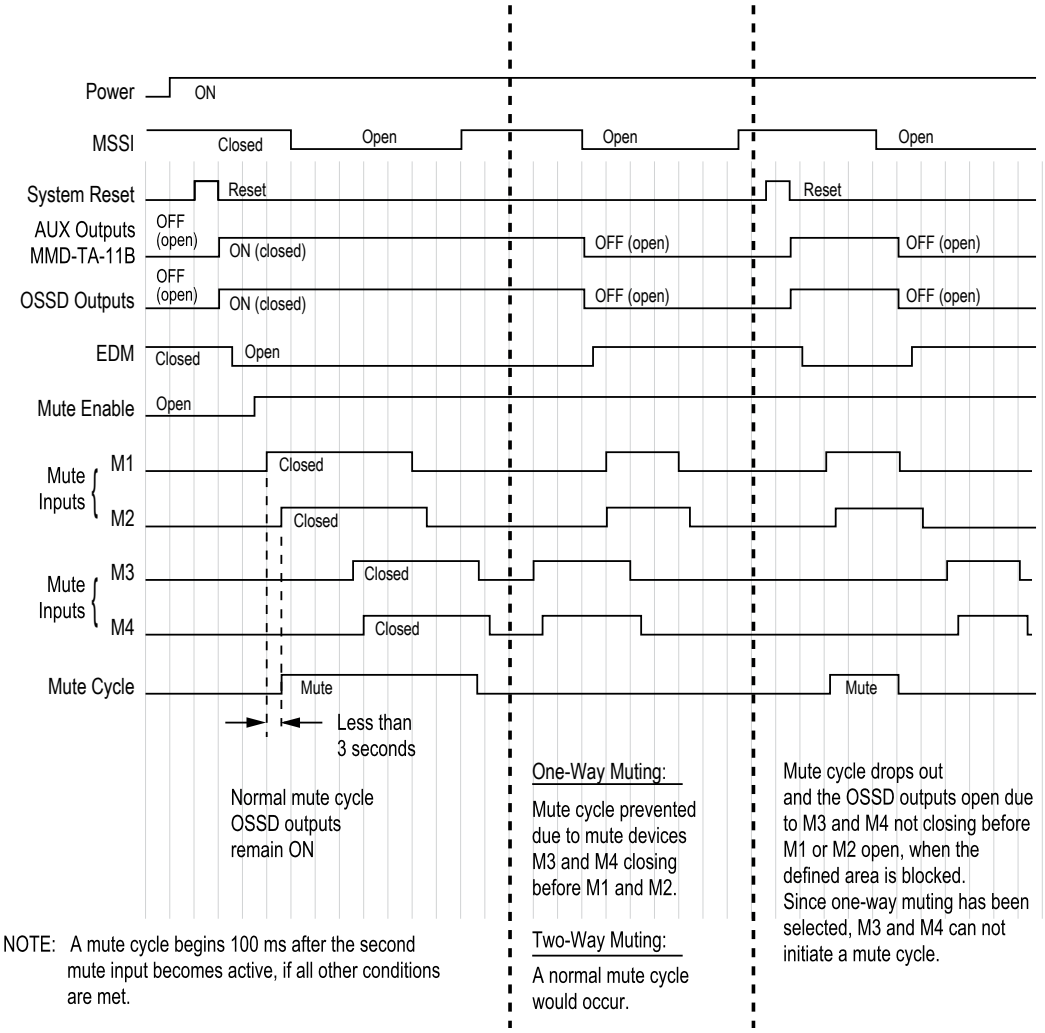

NOTE: A mute cycle begins 100 ms after the second mute input becomes active, if all other conditions are met.

10.4 DIP Switch Configuration[14]

MSSI Auto or Manual Reset . . . SW1 = OFF (Manual)

SSI Auto or Manual Reset . . . . SW2 = OFF (Manual) or ON (Auto)

One-Way Muting . . . . . SW3 = OFF (1-way)

Two-/One-Channel EDM . . . . . SW4 = OFF (2 CH)

Backdoor Timer . . . . . SW5&6 = OFF (30 seconds)

Monitored Muting Lamp . . . . . SW7 = OFF (Mon)

[14] Both DIT switch banks A and B.

© Banner Engineering Corp. All rights reserved.
www.bannerengineering.com

Mute on Power-up . . . . . SW8 = OFF (Disable)

© Banner Engineering Corp. All rights reserved.
www.bannerengineering.com

Chapter Contents

11.1 Entry/Exit Applications-Muting Modules 67
11.2 Home or Station Applications 69
11.3 Robot Load/Unload Station Application 70
11.4 Turret Table Application 70
11.5 Power Press Applications 71

Chapter 11 Typical Muting Applications

11.1 Entry/Exit Applications-Muting Modules

The muting devices must be placed to ensure that the points that trigger the mute's start and end are very close to the safety light screen's sensing field. This prevents personnel from following, or being pushed by, the object into the hazardous area without interrupting the safety light screen before the mute window opens or at the time the mute window closes.

When two pairs of opposed-mode photoelectrics are used as muting devices, as shown below, the crossing point of the two sensing paths must be on the hazardous side of the safety light screen. The safety light screen will be interrupted before any personnel would be able to block both beams and mute the system. The devices should detect the material and not the pallet or the transport to hinder an individual from riding into the hazardous area.

Figure 36. X-Pattern Entry/Exit system using two pairs of opposed-mode photoelectric muting devices

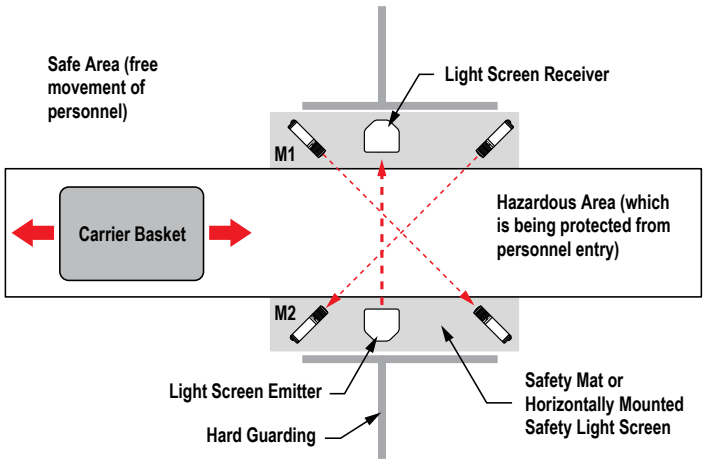

Figure 37. Horizontal photoelectric muting devices placed at different heights

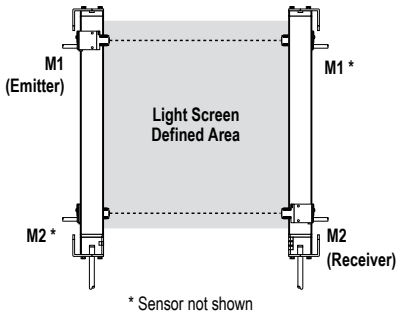

Figure 38. Photoelectric muting devices placed diagonally

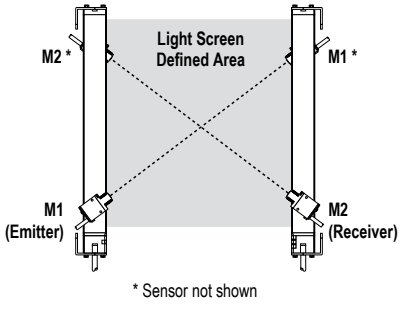

© Banner Engineering Corp. All rights reserved.
www.bannerengineering.com

WARNING:

- **Verify That Unintentional Muting is Not Possible**
- Failure to follow these instructions could result in serious injury or death.
- Position the crossing point of the photoelectric beams in the hazardous area so that it is not accessible by personnel. An individual must not be able to block both photoelectric beams and initiate a mute condition.

Figure 39. Entry/exit system using 4 whisker/limit switches as muting devices

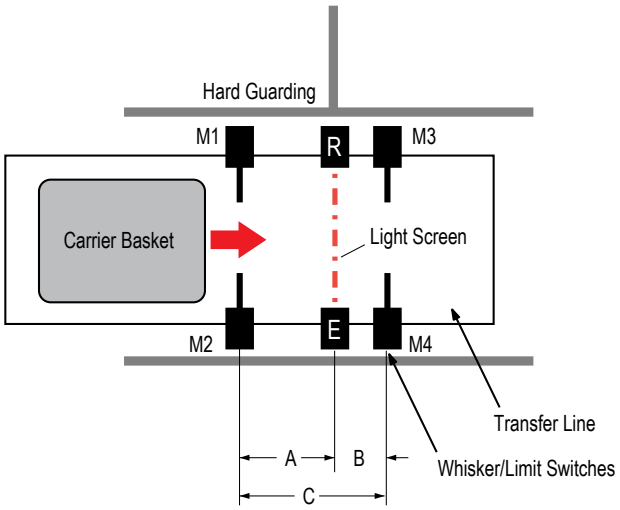

A ≥ (line speed in ft/sec) × 0.1 second

B ≈ 3 in or position must hinder personnel following a muted object

C ≤ Length of carrier basket

- Trapping hazards must be avoided and clearance requirements complied with
- Switch actuators can not be so long that they allow a single person to initiate a muted condition
- Polarized-retroreflective (with targets mounted on carrier) and inductive proximity sensors could be used in a similar manner, if an individual can not ride into the hazardous area.

One-way (directional) muting can be used in Exit applications to reduce the possibility of intentional defeat.

Figure 40. An entry/exit system using four photoelectric sensors as M1, M2, M3, and M4

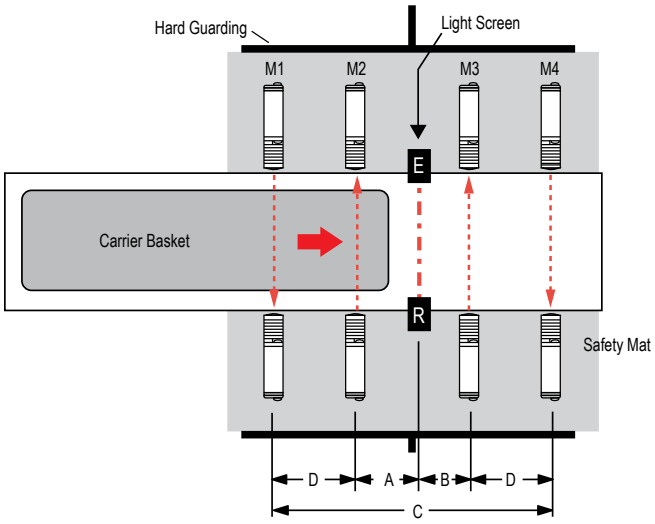

A ≥ (line speed in ft/sec) × 0.1 second

B ≈ 3 in or position must hinder personnel following a muted object

C ≤ Length of carrier basket

D < (line speed in ft/sec) × 3.0 seconds, but beams M1 and M2 must be far enough apart to hinder an individual from triggering both sensors

One-way (directional) muting can be used in Exit applications to reduce the possibility of intentional defeat.

© Banner Engineering Corp. All rights reserved.
www.bannerengineering.com

WARNING:

- It must not be possible for personnel to walk in front of, behind, or next to the muted object without being detected and stopping the hazardous motion.
- Failure to follow these instructions could result in serious injury or death.
- Use supplemental guarding to prevent personnel from entering the hazardous area during a mute condition.

11.2 Home or Station Applications

The muting devices must be placed to ensure that the safety light screen is muted only when the hazard does not exist or is in another area so that personnel are not exposed. The muting devices must be placed so that if a hazard arises, or the hazard enters the safeguarded area, the mute will immediately end and the safeguard will be active once again.

In home position muting applications, the light screen is active only while motion is taking place or a hazard is present, such as the closing of an automated door. In this example, the door is interlocked and the machine can not start until the opening is completely closed. The hazard being guarded by the light screen is the pinch point caused by the door closing.

M3 and M4 could be two SI-QS75MC safety switches, each with a single safety contact used for the muting input. M1 and M2 could be SI-QS90MF safety switches, each with two safety contacts (one for muting and one for interlocking) and one monitoring contact for a logic input.

If the light screen is also guarding hazards within the enclosure when the door is open or preventing cycle initiation, then switches M3 and M4 would not be used. The door could also be locked by using locking style safety switches, such as the SI-LS42 as M1 and M2.

Figure 41. A home position (door) muting application, using 4 safety switches as muting devices

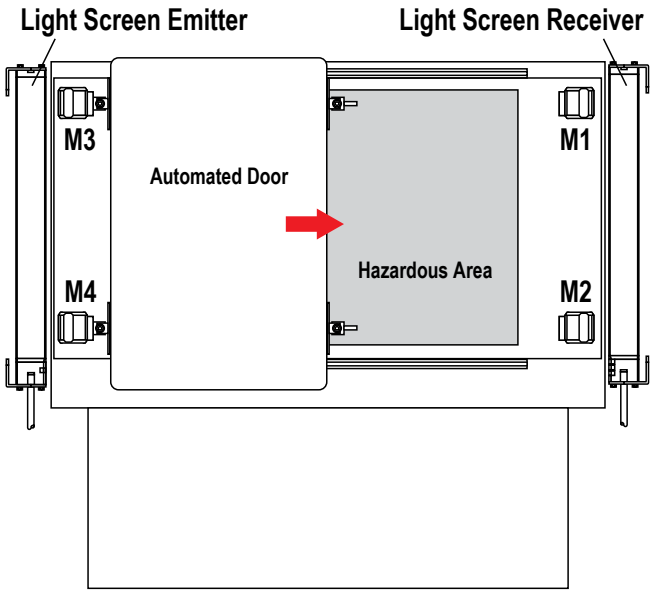

WARNING: User is Responsible for Safe Application of this Device

The muting application examples described in this manual depict generalized guarding situations. Every guarding application has a unique set of requirements.

Make sure that all legal requirements are met and that all installation instructions are followed. Direct any questions regarding safeguarding to Banner Engineering.

© Banner Engineering Corp. All rights reserved.
www.bannerengineering.com

11.3 Robot Load/Unload Station Application

This station muting application uses two independent safety light screen circuits, each with its own muting circuit and muting devices (for example, polarized-retroreflective photoelectrics). The application also includes run bars with two-hand control, auxiliary controls, and E-Stop. The two-hand control is provided at each station to safeguard the operator during the momentary clamping action of the fixture while the safety light screen is muted.

In this example, the safety light screens are angled outwards (see "Figure: A robot load/unload application with two-station home-position muting, using polarized retroreflective photoelectrics as muting devices" on page 70, detail A). This provides proper separation distance from the hazards created by the robot and the clamping/welding fixtures, while protecting against the possibility of pass-through hazards. In muting applications involving an operator, the operator must be continually detectable by the defined area. This ensures that if a hazard arises, causing the mute to end while the operator is present, the safety light screen will immediately issue a stop.

While the robot is at station A, the light screen at station B is muted (M1B and M2B are active), allowing the operator to load or unload without issuing a stop command to the robot. As the robot moves out of the A work envelope (as defined by Station B mute devices, see detail B) the mute discontinues at station B. If the operator is still within the protected area, a stop command is immediately issued. As the robot moves to the work envelope of station B, the mute devices M1A and M2A activate and mute the safety light screen at station A.

Figure 42. A robot load/unload application with two-station home-position muting, using polarized retroreflective photoelectrics as muting devices

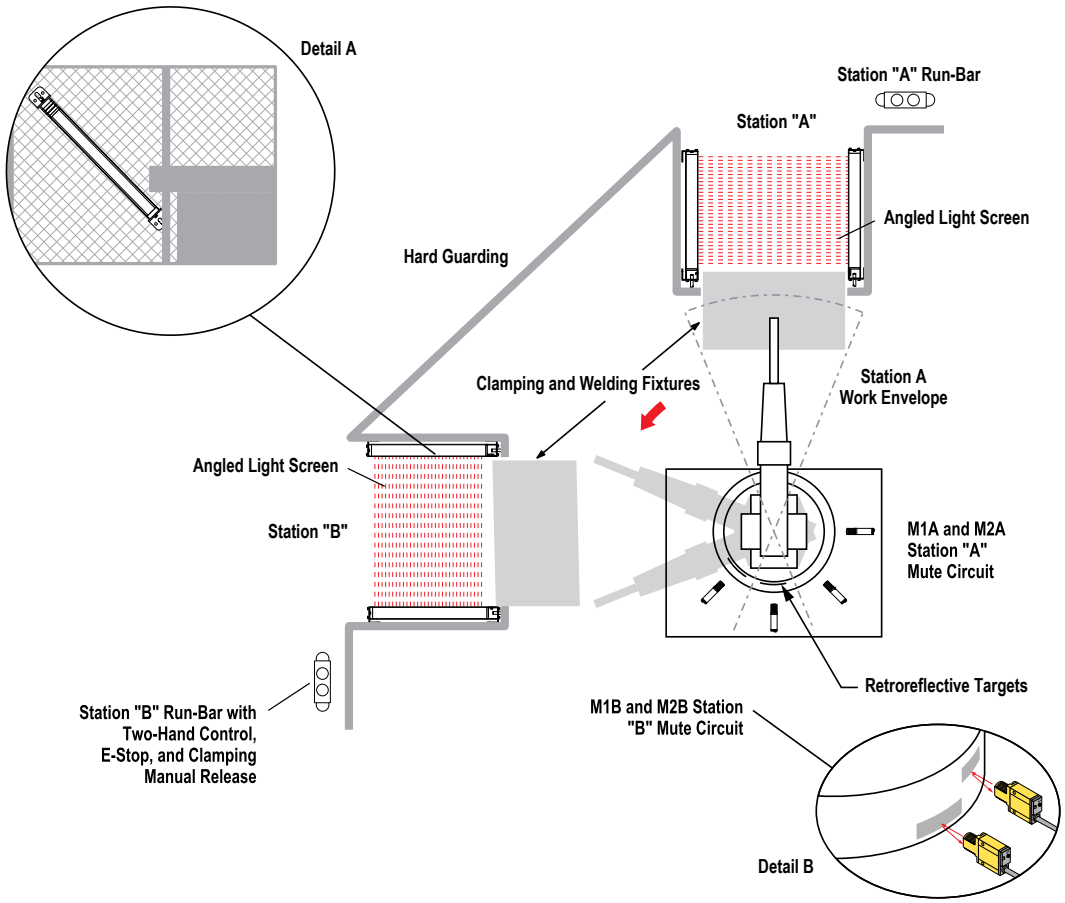

11.4 Turret Table Application

Turret Table application is similar to the Robot Load/Unload Station muting application, except that any movement of the table ends the mute. To accomplish this, small retroreflective targets (or tape) are positioned so that they will initiate the mute (the sensors must be set to Light Operate) only after the table has finished indexing.

© Banner Engineering Corp. All rights reserved.
www.bannerengineering.com

NOTE: The example shows four pairs of targets, one pair for each position.

When the table begins indexing again, the polarized retroreflective photoelectrics immediately lose sight of the targets and end the mute. Since the rotation of the table is the hazard, the size and positioning of the targets must prevent muting while motion is taking place.

The top of the emitter and receiver are angled outwards to maintain proper separation distance while preventing a pass-through hazard. Hard guarding, or other safeguarding, must be positioned to prevent personnel from reaching through and accessing any hazard.

Figure 43. A typical application for turret table inspection or operation station muting, using retroreflective photoelectric sensors as muting devices

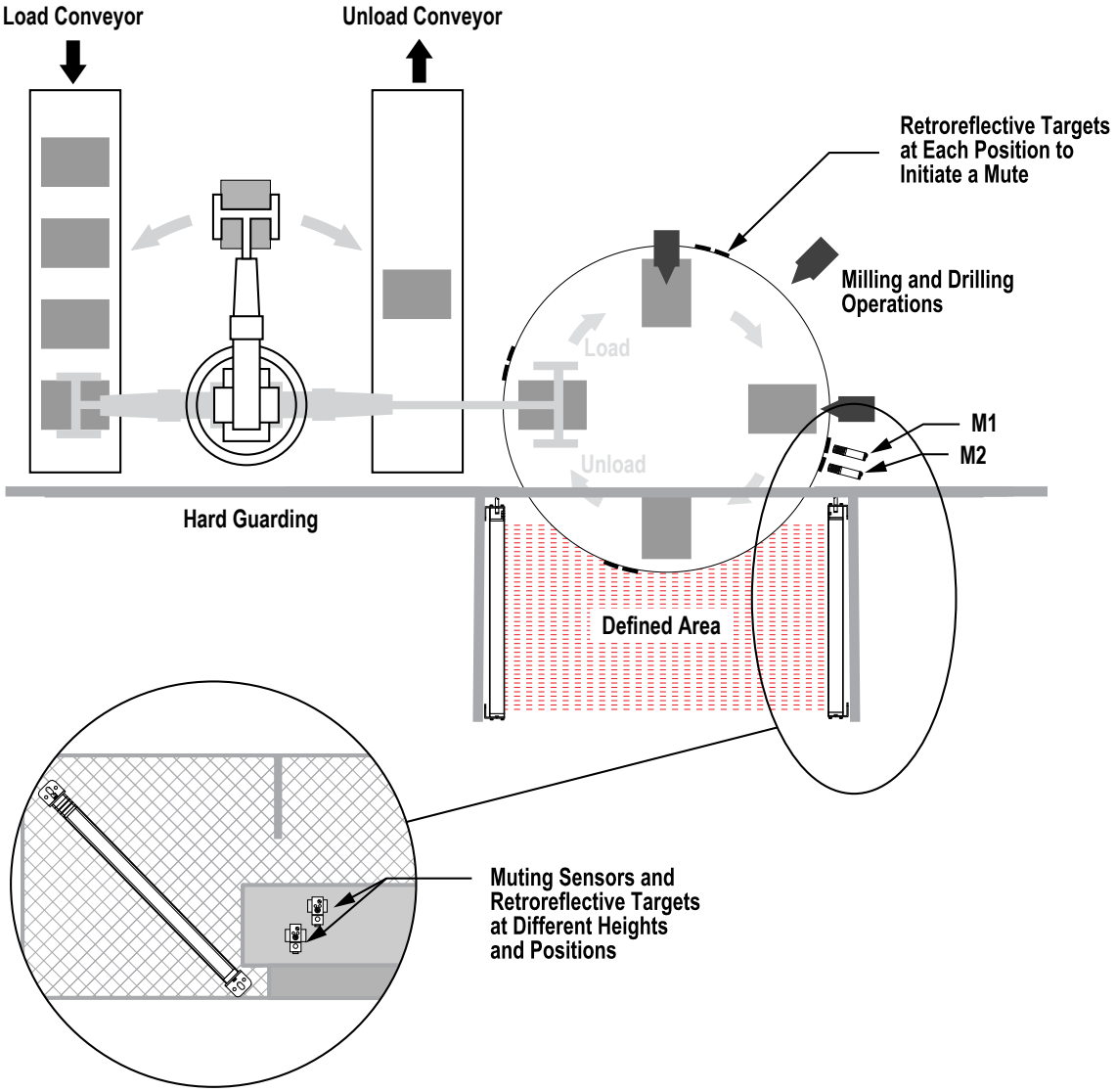

11.5 Power Press Applications

Muting is allowed on power presses only during the nonhazardous portion of the cycle (for example, the upstroke), per OSHA1910.217, ANSI B11.1, B11.2, and B11.3. The mute permits the insertion or removal of material into the press that

© Banner Engineering Corp. All rights reserved.
www.bannerengineering.com

would otherwise block the sensing field of the safety light screen, causing the press to stop. Muting should not be confused with Inch or Jog modes, whose manual selection may bypass the safety light screen within the machine control.

For the proper application of muting on a power press, at a minimum, two (or four) independent position switches (such as cam-operated limit switches, inductive prox sensors, or pressure switches) must be used to initiate the mute during the nonhazardous portion of the machine cycle. These position switches would be mute devices M1/M2 (and M3/M4 if used). Typically, these switches have normally open contacts, which are held (or actuated) closed during the mute cycle.

These switches must be mounted separately to prevent misadjustment, misalignment, or a single common mode failure, which would result in an improper mute cycle or otherwise unsafe condition. They must be installed so that they can not be easily defeated or bypassed, and their adjustment should be under supervisory control.

The two (or four) muting devices must be properly adjusted (or positioned) so that they close only after the hazard no longer exists and then open when the cycle is complete (top of stroke) or when the hazard is again present. If improperly adjusted or positioned, injury or death could result.

If the machine has reversing capability where a hazard is possible during a muted condition, the control must include an automatic means through which muting is permitted in the forward (non-hazardous) direction only. A Mute Enable signal from the machine control, motor drive, or other machine logic, is a means to assist in meeting this requirement.

In muting applications involving an operator, all pass-through hazards must be eliminated so that the operator is continually detected when in the defined area. This ensures that if a hazard arises, causing the mute cycle to end while the operator is present, the safety light screen will immediately issue a stop. (See pass-through hazard information below.)

A pass-through hazard is associated with applications that allow personnel to pass through a safeguard, which removes or stops the hazard(s), and then allows the individual to continue into the hazardous area. Subsequently the individual’s presence is no longer detected, and the safeguard can not prevent the start or restart of the machine. A pass-through can be created by as little as 75 mm (3 in) space between the defined area and machine frame. If the safety light screen is muted while the individual passes through the defined area, a stop command will not be issued and the hazard cannot be eliminated; the individual must be detected while entering the safeguarded area and the hazardous motion must stop immediately. This is typically accomplished by supplemental safeguarding such as described in ANSI B11 standards or other appropriate standards.



WARNING: User Responsibility—The user is responsible for ensuring that all local, state, and national laws, rules, codes, and regulations relating to the use of this device in any particular application are satisfied. Make sure that all legal requirements have been met and that all installation, operation, and maintenance instructions contained in the device documentation are followed.

© Banner Engineering Corp. All rights reserved.

Chapter Contents

12.1 Solid-State LED-Based Mute Lamp 73
12.2 Interface Modules 73

Chapter 12 Accessories

12.1 Solid-State LED-Based Mute Lamp

Any standard NPN white or amber Banner EZ-LIGHT® can be used as a mute lamp.

12.2 Interface Modules

Model	Input Voltage	Inputs	Safety Outputs	Aux. Outputs	Output Rating	EDM Contacts
IM-T-9A	24 V dc	2 (dual-channel hookup)	3 N.O.	—	6 amps	2 N.C.
IM-T-11A			2 N.O.	1 N.C.		
SR-IM-9A			3 N.O.	—	See datasheet for specifications	
SR-IM-11A			2 N.O.	1 N.C.		

12.2.1 Mechanically Linked Contactors

Mechanically Linked Contactors provide an additional 10 or 18 amp carrying capability to any safety system. If used, two contactors per Safety Output pair are required for Category 4. A single OSSD output with 2 contactors can achieve Category 3. The N.C. contacts are to be used in an external device monitoring (EDM) circuit.

Model	Supply Voltage	Inputs	Outputs	Output Rating
11-BG00-31-D-024	24 V dc	2 (dual-channel hookup)	3 N.O. and 1 N.C.	10 amps
BF1801L-024				18 amps

© Banner Engineering Corp. All rights reserved.
www.bannerengineering.com

Chapter Contents

13.1 Repairs-Muting Module 74
13.2 Banner Engineering Corp Limited Warranty 74
13.3 Contact Us 74

Chapter 13 Product Support and Maintenance

13.1 Repairs-Muting Module

Contact Banner Engineering for troubleshooting of this device. **Do not attempt any repairs to this Banner device; it contains no field-replaceable parts or components.** If the device, device part, or device component is determined to be defective by a Banner Applications Engineer, they will advise you of Banner's RMA (Return Merchandise Authorization) procedure.

IMPORTANT: If instructed to return the device, pack it with care. Damage that occurs in return shipping is not covered by warranty.

WARNING:

- **Shut down the machinery before servicing**
- Servicing the Banner Engineering Corp. device or system while the hazardous machinery is operational could result in serious injury or death.
- The machinery to which the Banner Engineering Corp. device or system is connected must not be operating at any time during major service or maintenance. This might require lockout/tagout procedures (refer to OSHA1910.147, ANSI Z244-1, ISO 14118 or the applicable standard for controlling hazardous energy).

13.2 Banner Engineering Corp Limited Warranty

Banner Engineering Corp. warrants its products to be free from defects in material and workmanship for one year following the date of shipment. Banner Engineering Corp. will repair or replace, free of charge, any product of its manufacture which, at the time it is returned to the factory, is found to have been defective during the warranty period. This warranty does not cover damage or liability for misuse, abuse, or the improper application or installation of the Banner product.

THIS LIMITED WARRANTY IS EXCLUSIVE AND IN LIEU OF ALL OTHER WARRANTIES WHETHER EXPRESS OR IMPLIED (INCLUDING, WITHOUT LIMITATION, ANY WARRANTY OF MERCHANTABILITY OR FITNESS FOR A PARTICULAR PURPOSE), AND WHETHER ARISING UNDER COURSE OF PERFORMANCE, COURSE OF DEALING OR TRADE USAGE.

This Warranty is exclusive and limited to repair or, at the discretion of Banner Engineering Corp., replacement. **IN NO EVENT SHALL BANNER ENGINEERING CORP. BE LIABLE TO BUYER OR ANY OTHER PERSON OR ENTITY FOR ANY EXTRA COSTS, EXPENSES, LOSSES, LOSS OF PROFITS, OR ANY INCIDENTAL, CONSEQUENTIAL OR SPECIAL DAMAGES RESULTING FROM ANY PRODUCT DEFECT OR FROM THE USE OR INABILITY TO USE THE PRODUCT, WHETHER ARISING IN CONTRACT OR WARRANTY, STATUTE, TORT, STRICT LIABILITY, NEGLIGENCE, OR OTHERWISE.**

Banner Engineering Corp. reserves the right to change, modify or improve the design of the product without assuming any obligations or liabilities relating to any product previously manufactured by Banner Engineering Corp. Any misuse, abuse, or improper application or installation of this product or use of the product for personal protection applications when the product is identified as not intended for such purposes will void the product warranty. Any modifications to this product without prior express approval by Banner Engineering Corp will void the product warranties. All specifications published in this document are subject to change; Banner reserves the right to modify product specifications or update documentation at any time. Specifications and product information in English supersede that which is provided in any other language. For the most recent version of any documentation, refer to: www.bannerengineering.com.

For patent information, see www.bannerengineering.com/patents.

13.3 Contact Us

Banner Engineering Corp. | 9714 Tenth Avenue North | Plymouth, MN 55441, USA | Phone: + 1 888 373 6767

For worldwide locations and local representatives, visit www.bannerengineering.com.

© Banner Engineering Corp. All rights reserved.
www.bannerengineering.com

Chapter Contents

14.1 U.S. Application Standards 75
14.2 OSHA Regulations 75
14.3 International/European Standards 76

Chapter 14 Standards and Regulations

The list of standards below is included as a convenience for users of this Banner device. Inclusion of the standards below does not imply that the device complies specifically with any standard, other than those specified in the Specifications section of this manual.

14.1 U.S. Application Standards

ANSI B11.1 Mechanical Power Presses

ANSI B11.2 Hydraulic Power Presses

ANSI B11.3 Power Press Brakes

ANSI B11.4 Shears

ANSI B11.5 Iron Workers

ANSI B11.6 Lathes

ANSI B11.7 Cold Headers and Cold Formers

ANSI B11.8 Drilling, Milling, and Boring

ANSI B11.9 Grinding Machines

ANSI B11.10 Metal Sawing Machines

ANSI B11.11 Gear Cutting Machines

ANSI B11.12 Roll Forming and Roll Bending Machines

ANSI B11.13 Single- and Multiple-Spindle Automatic Bar and Chucking Machines

ANSI B11.14 Coil Slitting Machines

ANSI B11.15 Pipe, Tube, and Shape Bending Machines

ANSI B11.16 Metal Powder Compacting Presses

ANSI B11.17 Horizontal Extrusion Presses

ANSI B11.18 Machinery and Machine Systems for the Processing of Coiled Strip, Sheet, and Plate

ANSI B11.19 Performance Requirements for Risk Reduction Measures: Safeguarding and Other Means of Reducing Risk

ANSI B11.20 Manufacturing Systems

ANSI B11.21 Machine Tools Using Lasers

ANSI B11.22 Numerically Controlled Turning Machines

ANSI B11.23 Machining Centers

ANSI B11.24 Transfer Machines

ANSI B11.TR3 Risk Assessment

ANSI/RIA R15.06 Safety Requirements for Industrial Robots and Robot Systems

NFPA 79 Electrical Standard for Industrial Machinery

14.2 OSHA Regulations

OSHA Documents listed are part of: Code of Federal Regulations Title 29, Parts 1900 to 1910	OSHA 29 CFR 1910.147 The Control of Hazardous Energy (lockout/tagout)
OSHA 29 CFR 1910.212 General Requirements for (Guarding of) All Machines	OSHA 29 CFR 1910.217 (Guarding of) Mechanical Power Presses

© Banner Engineering Corp. All rights reserved.
www.bannerengineering.com

14.3 International/European Standards

ISO 12100 Safety of Machinery – General Principles for Design – Risk Assessment and Risk Reduction ISO 13852 (EN 294) Safety of Machinery – Safety Distances to Prevent Danger Zones Being Reached by the Upper Limbs ISO 13851 Two-Hand Control Devices – Principles for Design and Selection ISO 13853 (EN 811) Safety of Machinery – Safety Distances to Prevent Danger Zones Being Reached by the Lower Limbs ISO 13849-1 Safety of Machinery – Safety-Related Parts of Control Systems – Part 1: General Principles for Design EN 13855 (EN 999) The Positioning of Protective Equipment in Respect to Approach Speeds of Parts of the Human Body ISO 14121 (EN 1050) Principles of Risk Assessment ISO 14119 (EN 1088) Interlocking Devices Associated with Guards – Principles for Design and Selection	EN 60204-1 Electrical Equipment of Machines Part 1: General Requirements IEC 61496 Electro-sensitive Protection Equipment IEC 60529 Degrees of Protection Provided by Enclosures IEC 60947-5-1 Low Voltage Switchgear – Electromechanical Control Circuit Devices IEC 60947-1 Low Voltage Switchgear – General Rules IEC 61508 Functional Safety of Electrical/Electronic/ Programmable Electronic Safety-Related Systems IEC 62061 Safety of Machinery – Functional Safety of Safety-Related Control Systems IEC 62046 Safety of Machinery – Applications of Protective Equipment to Detect the Presence of Persons

© Banner Engineering Corp. All rights reserved.

Index

A
automatic reset 8
auxiliary output 10, 28
AUX 28

B
backdoor timer 11

C
corner mirrors 19
control reliability 9
category 3 31
category 2 31
category 4 32
checkout, periodic 59

D
designated person 13

E
external device monitoring 10
EDM 10
emergency stop wiring 33

F
fault exclusion 30
FSD 52
final switching devices 52

I
interfacing
  SSI 29
  MSSI 29

L
lockout conditions 9

M
mute enable 11
ME 11
muting
  one-way 13
  two-way 13
  directional 13
  muting
    non-directional 13
mute devices 11
mirrors 19
manual reset 8
muting device requirements 26
Muteable Safety Stop Interface 9
MSSI 9
MSSI interfacing 29
mute lamp output 28, 11
ML 28, 11
muting function 10
mute sensor 26, 26
mute switch 26, 26
manual reset switch 25

O
one-way muting 13
OSSD Outputs 9
override 12
override switch 29

P
Protective Stop Interface 9
periodic checkout procedure 59

Q
qualified person 13

R
reset
  automatic 8
  manual 8
reset routine 25
requirements
  muting device 26
redundancy 9
reset switch
  manual 25

S
Safety Stop Interface 9
SSI 9
safety circuit integrity levels 34
self-checking 9
SSI interfacing 29

T

© Banner Engineering Corp. All rights reserved.
www.bannerengineering.com

two-way muting 13
timer
backdoor 11

W

wiring
emergency stop 33

© Banner Engineering Corp. All rights reserved.
www.bannerengineering.com

LinkedIn

X

Facebook

Instagram



© 2025. All rights reserved.