TCNM AD/EX Barcode Scanner

Instruction Manual

Original Instructions
174476 Rev. A
28 January 2014

BANNER®

ПРОМЭЛЕКТРОНИКА/ sales@prom-elec.com

Contents

1 Safety and Compliance Notices 4
2 Installation 6
2.1 Package Contents 6
2.1.1 General View 6
2.2 Mechanical Installation 6
2.2.1 Mounting Barcode Scanner 7
2.2.2 Mounting the Deflection Mirror (Option) 8
2.2.3 Positioning 9
3 Introduction 11
3.1 Product Description 11
3.1.1 Indicators 11
3.2 Model Description 11
4 Default Settings 13
5 Rapid Configuration 14
5.1 STEP 1 – Connect the System 14
5.1.1 TCNM-ACBB1 Pinout 14
5.1.2 25-pin Connector Pinout 15
5.2 STEP 2 – Mounting and Positioning the System 16
5.3 STEP 3 – SMART-TEACH Configuration 17
5.3.1 Auto Learn 18
5.3.2 Auto Setup (Optional) 18
5.3.3 Reset Scanner to Factory Default (Optional) 19
5.4 STEP 4 – Installing GeniusPlus Configuration Program 19
5.4.1 Wizard for Quick Reader Setup 19
5.5 STEP 5 – Test Mode 22
6 Advanced Scanner Configuration 23
6.1 SMART-TEACH Human Machine Interface 23
6.1.1 Diagnostic Indication 24
6.1.2 SMART-TEACH Functions 24
7 TCNM-ACBB1 Electrical Connections 27
7.1 Power Supply 28
7.2 Main Serial Interface 28
7.2.1 RS232 Interface 28
7.2.2 RS485 Full-Duplex Interface 30
7.3 Auxiliary RS232 Interface 31
7.4 Inputs 32
7.4.1 Code Verifier 34
7.5 Outputs 34
7.6 User Interface - Host 35
8 Typical Layouts 37
8.1 Point-to-Point 37
8.2 Pass-Through Mode 38
9 Reading Features 39
9.1 Advanced Code Reconstruction 39
9.1.1 Important Advanced Code Reconstruction Reading Conditions 40
9.1.2 Tilt Angle for Advanced Code Reconstruction 40
9.1.3 Advanced Code Reconstruction Reading Conditions 41
9.2 Linear Code Reading 42
9.2.1 Step-Ladder Mode 42
9.2.2 Picket-Fence Mode 43
9.3 Performance 44
9.3.1 Reading Performance (TCNM-EX Models) 44
9.3.2 Reading Performance (TCNM-AD Models) 44
9.3.3 Raster 45
9.4 Reading Diagrams 45
9.4.1 Reading Diagrams (TCNM-EX Models) 45
9.4.2 Reading Diagrams (TCNM-AD Models) 47
10 Maintenance 49
11 Troubleshooting 50
11.1 General Guidelines 50
11.2 Troubleshooting Guide 50
12 Specifications 52
13 Accessories 54

14 Glossary 55

1 Safety and Compliance Notices



WARNING: Not To Be Used for Personnel Protection

Never use this device as a sensing device for personnel protection. Doing so could lead to serious injury or death. This device does not include the self-checking redundant circuitry necessary to allow its use in personnel safety applications. A sensor failure or malfunction can cause either an energized or de-energized sensor output condition.

1 Laser Safety

The following information is provided to comply with the rules imposed by international authorities and refers to the correct use of the TCNM-AD/EX family of scanners.

1 Standard Regulations

This scanner uses a low-power laser diode. Although staring directly at the laser beam momentarily causes no known biological damage, avoid staring at the beam as one would with any very strong light source, such as the sun. Avoid allowing the laser beam to hit the eye of an observer, even through reflective surfaces such as mirrors, etc.

This product conforms to the applicable requirements of IEC 60825-1 and complies with 21 CFR 1040.10 except for deviations pursuant to Laser Notice N° 50, date June 24, 2007. The scanner is classified as a Class 2 laser product according to IEC 60825-1 regulations.

There is a safety device, which allows the laser to be switched on only if the motor is rotating above the threshold for its correct scanning speed.

The laser beam can be switched off through a software command (see also the GeniusPlus Help On Line).



WARNING:

Use of controls or adjustments or performance of procedures other than those specified herein may result in exposure to hazardous visible laser light.

The laser light is visible to the human eye and is emitted from the window on the front of the scanner. Warning labels indicating exposure to laser light and the device classification are applied onto the body of the scanner.

Disconnect the power supply when opening the device during maintenance or installation to avoid exposure to hazardous laser light.

The laser diode used in this device is classified as a class 3B laser product according to EN 60825-1 regulations and as a Class IIIb laser product according to CDRH regulations.

Any violation of the optic parts in particular can cause radiation up to the maximum level of the laser diode (35 mW at 630 to 680 nm).

1 FCC Compliance

Modifications or changes to this equipment without the expressed written approval of Banner Engineering Corp could void the authority to use the equipment.

This device complies with PART 15 of the FCC Rules. Operation is subject to the following two conditions: (1) This device may not cause harmful interference, and (2) this device must accept any interference received, including interference which may cause undesired operation.

This equipment has been tested and found to comply with the limits for a Class A digital device, pursuant to part 15 of the FCC Rules. These limits are designed to provide reasonable protection against harmful interference when the equipment is operated in a commercial environment. This equipment generates, uses, and can radiate radio frequency energy and, if not installed and used in accordance with the instruction manual, may cause harmful interference to radio

communications. Operation of this equipment in a residential area is likely to cause harmful interference in which case the user will be required to correct the interference at his own expense.

1 Power Supply

This product is intended to be installed by Qualified Personnel only.

This accessory device is intended to be supplied by a UL Listed or CSA Certified Power Unit with «Class 2» or LPS power source, which supplies power directly to the scanner via the 25-pin connector.

1 CE Compliance



WARNING:

This is a Class A product. In a domestic environment this product may cause radio interference in which case the user may be required to take adequate measures.

1 Handling

The TCNM-AD is designed to be used in an industrial environment and is built to withstand vibration and shock when correctly installed. However, it is also a precision product and it must be handled correctly before and during installation to avoid damage.

- Avoid that the scanners hit one another causing damage. They should be handled separately.
- Avoid that the scanners are dropped (exceeding shock limits).
- Do not fine tune the positioning by striking the scanner or bracket.
- Do not weld the scanner into position; this can cause electrostatic, heat, or output window damage.
- Do not spray paint near the scanner; this can cause output window damage.

2 Installation

2.1 Package Contents

Verify that the barcode reader and all the parts supplied with the equipment are present and intact when opening the packaging; the list of parts includes:

- Barcode reader with cable
- Quick Start Guide
- Barcode Test Chart
- GeniusPlus CD-ROM
- Replicate serial number labels
- Mounting kit: bracket, screws

NOTE: The replicate serial number labels are for external reference and can be applied to the reading station and/or to the TCNM-ACM-OM110 accessory when used.

2.1.1 General View



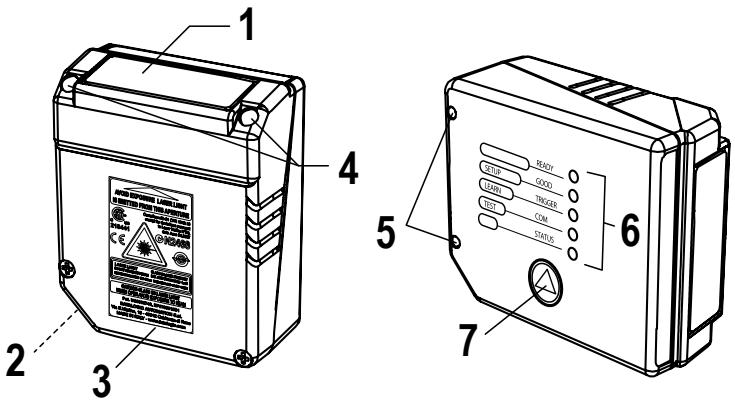

1 = Laser Beam Output Window
2 = POWER ON LED
3 = Warning and Device Class Labels
4 = Accessory Mounting Holes
5 = Mounting Holes
6 = LEDs
7 = Push Button

2.2 Mechanical Installation

The barcode scanner can be installed to operate in different positions. The four screw holes (M4 x 5) on the body of the reader are for mechanical fixture. The diagrams below give the overall dimensions of the scanner and mounting bracket and may be used for installation.

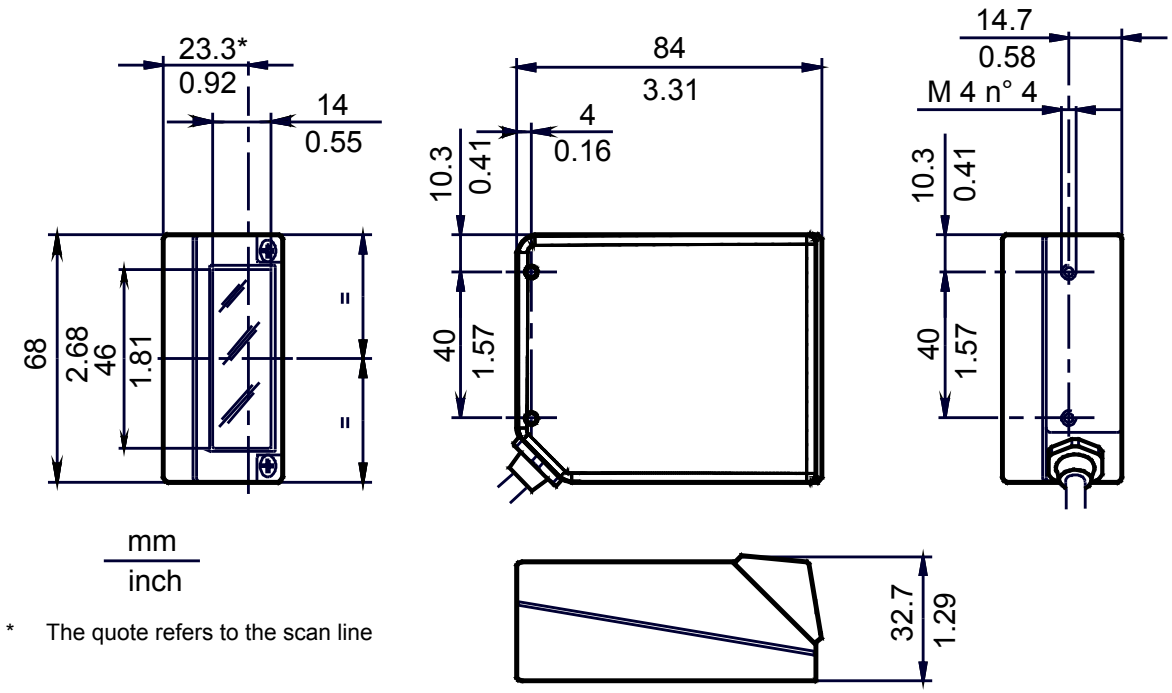

Figure 1. Overall Dimensions

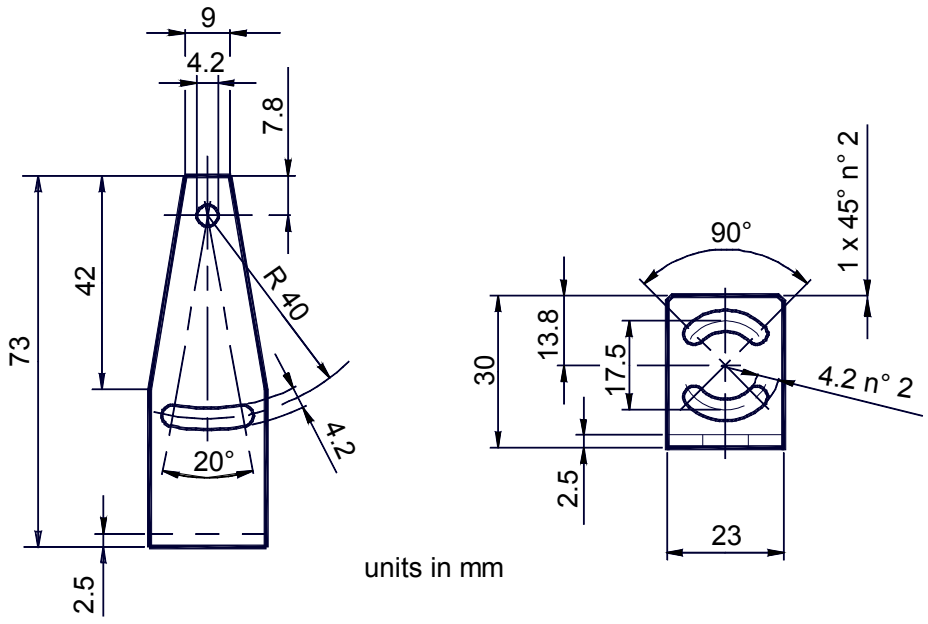

Figure 2. Mounting Bracket Overall Dimensions

2.2.1 Mounting Barcode Scanner

Use the barcode scanner mounting bracket to obtain the most suitable position for the reader as shown.

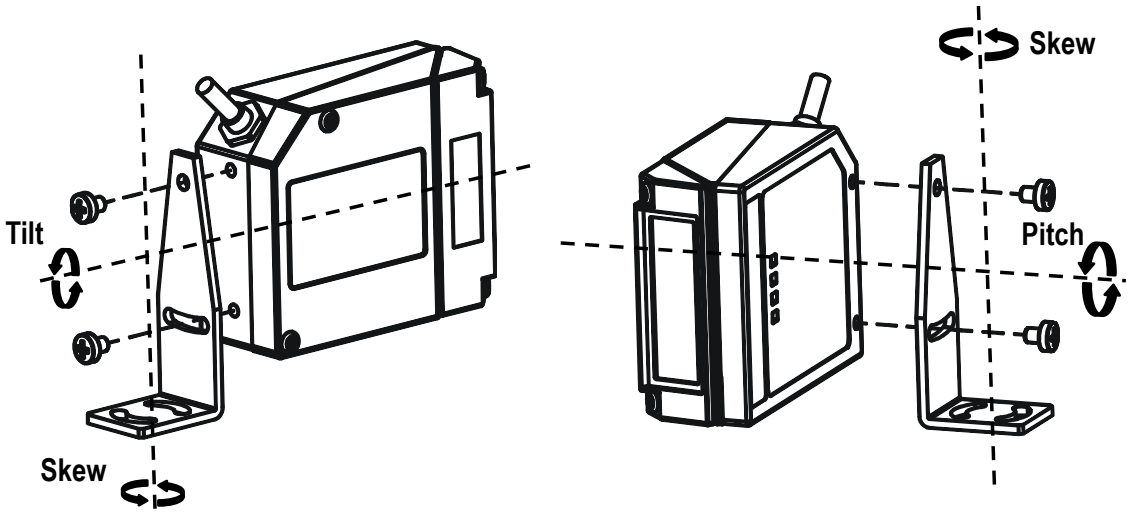

Figure 3. Positioning with Mounting Bracket at 10° Angle

2.2.2 Mounting the Deflection Mirror (Option)

The TCNM-ACM-102R accessory is a 102° deflection mirror that can be mounted to a barcode scanner. Install the deflection mirror as follows:

1. Make sure the device is not powered
2. Remove the 0° scanning window from the scanner by unscrewing the two cover screws

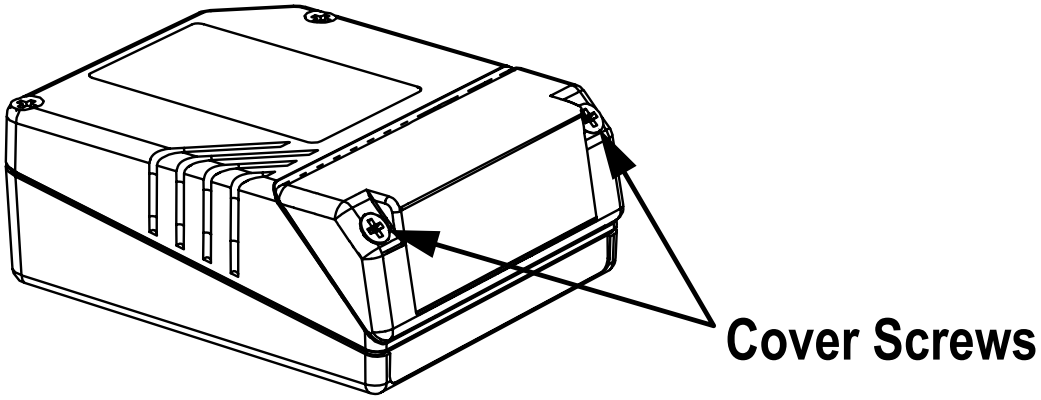

Figure 4. Removing the 0° Scanning Window

CAUTION: Avoid any contact with the deflection mirror, mirrored rotor, the lenses or other optical components; otherwise the performance of the reader will be reduced.

3. Clean the mirror surface and reading window with a clean soft cloth and alcohol before closing the scanner.
4. Mount the TCNM-ACM-102R 102° scanning window so the opening face is at 90° with respect to the scanner body.

5. Tighten the two cover screws.

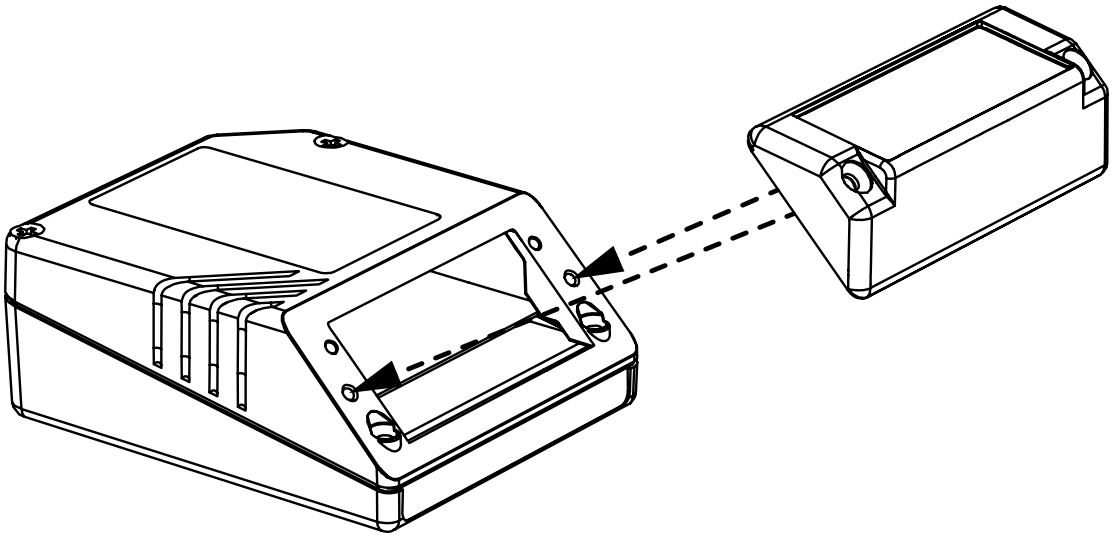

Figure 5. Mounting TCNM-ACM-102R Deflection Mirror

The reading position with respect to the scanner is shown below.

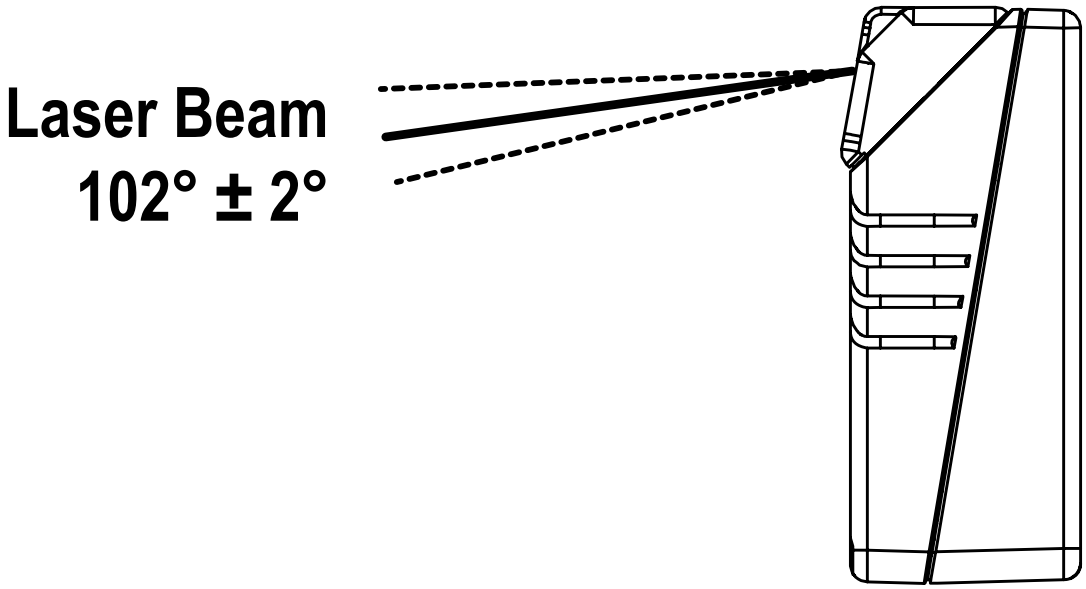

Figure 6. TCNM-ACM-102R Laser Beam Output Position

2.2.3 Positioning

The barcode scanner is able to decode moving barcode labels at a variety of angles, however, significant angular distortion may degrade reading performance. When mounting the barcode scanner take into consideration these three ideal label position angles: Skew 10° to 30°, Tilt 0°, and Pitch 0°.

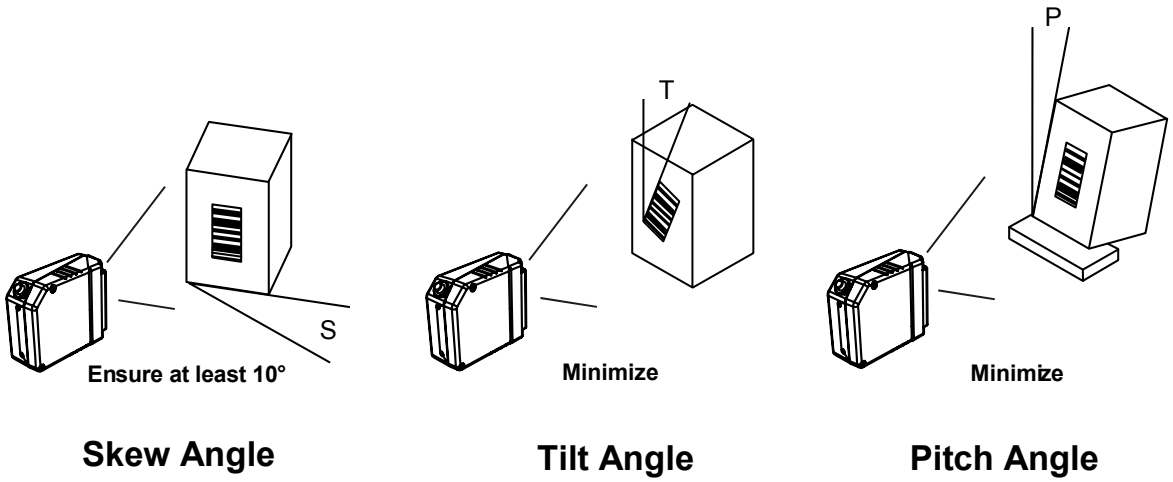

Figure 7. Skew, Tilt, and Pitch Angles

The Skew angle is represented by the value S shown. Position the reader to assure at least 10° for the Skew angle. This avoids the direct reflection of the laser light emitted by the barcode scanner. For the raster version, this angle refers to the most inclined or external raster line, so that all other raster lines assure more than 10° Skew.

The Tilt angle is represented by the value T shown. Position the reader to minimize the Tilt angle.

By using the Reconstruction Reading Mode software parameter, the tilt angle is less critical and can be decoded even if the scan line doesn't cross the entire code.

The Pitch angle is represented by the value P. Position the reader to minimize the Pitch angle.

3 Introduction

3.1 Product Description

The barcode laser scanner satisfies the most advanced needs of a wide range of users. It has been developed focusing on the realistic requirements of its target market. The outstanding result is an extremely compact, cost-effective, and easy-to-use industrial scanner.

The barcode scanner uses a solid-state laser diode as a light source; the light emitted has a wavelength between 630 and 680 nm. Refer to *Safety and Compliance Notices* on page 4 for information on laser safety.

The enclosure is rated IP65, making the scanner is suitable for industrial environments where high protection against harsh external conditions is required.

3.1.1 Indicators

The five LEDs on the side of the scanner indicate the following:

Table 1: Indicators

Label	Color	Meaning
READY	Green	Indicates the device is ready to operate
GOOD	Green	Confirms successful reading
TRIGGER	Yellow	Indicates the status of the reading phase [1]
COM	Yellow	Indicates active communication on main serial port
STATUS	Red	Indicates a NO READ result

During the reader startup (reset or restart phase), all the LEDs blink for one second.

On the back of the reader near the cable, the “POWER ON” LED indicates the laser scanner is correctly powered.

3.2 Model Description

The barcode scanners are available in versions that differ in regard to the following parameters:

- Resolution
- Performance
- Linear or raster reading

3.2 TCNM-AD Models

TCNM-AD-	X	2	X	X
	Optical Resolution	Communication Interface	Option Version	Performance
	1 = Standard resolution	2	0 = Linear	0 = Standard
	2 = High resolution		1 = Raster	4 = High Performance

The following tables display each version’s reading performance:

[1] In On-Line mode the TRIGGER LED corresponds to the active reading phase signaled by the Presence Sensor. In Automatic and Continuous modes the TRIGGER LED is always on, indicating the reader is ready to read a code.

Version	Max Code Resolution (mm (mils))	Max Code Resolution (scans/s)
12X0	0.20 (8)	500 to 800
12X4	0.15 (6)	800 to 1000
22X0	0.15 (6)	500 to 800
22X4	0.12 (5)	800 to 1000

Version	Reading Distance
12X0	40 mm (1.6 in) - 300 mm (11.8 in) on 0.50 mm (20 mils) codes
12X4	50 mm (1.8 in) - 310 mm (11.8 in) on 0.50 mm (20 mils) codes
22X0	30 mm (1.2 in) - 90 mm (3.5 in) on 0.30 mm (12 mils) codes
22X4	45 mm (1.8) – 100 mm (3.9 in) on 0.20 mm (8 mils) codes

3.2 TCNM-EX Models

TCNM-EX-	X	X	X	0
	Reading Range	Communication Interface	Option Version	
	0 = Short 1 = Medium 2 = Long	2	0 = Linear 1 = Raster	

The following tables display each version's reading performance:

Version	Max Code Resolution (mm (mils))	Max Code Resolution (scans/s)
02X0	0.20 (8)	600 to 1000
12X0	0.25 (10)	600 to 1000
22X0	0.35 (14)	600 to 1000

Version	Reading Distance
02X0	75 mm (3 in) - 340 mm (13.4 in) on 0.35 mm (14 mils) codes
12X0	100 mm (3.9 in) - 440 mm (17.3 in) on 0.50 mm (20 mils) codes
22X0	190 mm (7.5 in) - 600 mm (23.6 in) on 0.50 mm (20 mils) codes

See reading diagrams for further details.

4 Default Settings

1. On-line operating mode (1 input, active closed)
2. Code Label Settings #1 = Read Code 39, variable length, up to 60 characters (Match string rule)
3. Code Label Settings #2 = Read I 2 of 5 of 8 characters (Match string rule)
4. Code Label Settings #3 = Read Code 128, variable length, up to 60 characters (Match string rule)
5. Code Label Settings #4 through #10 = disabled
6. Output 1 (normally open) No Read, Partial Read, 50 msec duration
7. Output 2 (normally open) Complete Read, Partial Read, 50 msec duration
8. RS-232 serial port: 9600 baud, 8 data bits, None parity, 1 Stop bit, Flow Control none
9. Standard Code Resolution, Standard Reading Conditions, default scans per sec (800 for EX, 500 for AD)

Default Operation:

1. Takes a trigger input
2. Reads the codes above
3. Outputs the data via RS-232 if code type and length meet the above requirements

5 Rapid Configuration

5.1 STEP 1 – Connect the System

NOTE: This section illustrates a standalone application. For a pass-through installation, refer to the appropriate section. For complete scanner configuration using the GeniusPlus configuration program, refer to the Context-Sensitive Help On-Line.

To connect the system in a standalone configuration, you need the hardware indicated below. In this layout, the data is transmitted to the Host on the main serial interface.

- In Local Echo communication mode, data is transmitted on the RS-232 auxiliary interface independently from the main interface selection.
- When On Line Operating mode is used, the scanner is activated by an External Trigger (photoelectric sensor) when the object enters its reading zone.

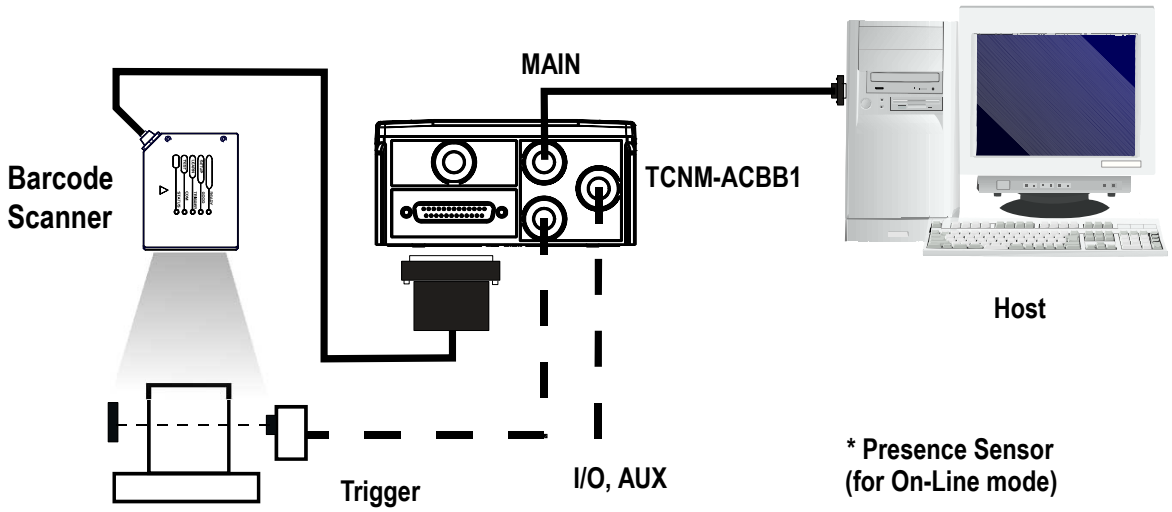

Figure 8. Barcode scanner in a standalone layout

5.1.1 TCNM-ACBB1 Pinout

The table below gives the pinout of the TCNM-ACBB1 terminal block connectors. Use this pinout when the barcode scanner is connected using the TCNM-ACBB1:

TCNM-ACBB1 Terminal Block Connectors			
Input Power		Outputs	
Vdc	Power Supply Input Voltage +	+V	Power Source - Outputs
GND	Power Supply Input Voltage –	–V	Power Reference - Outputs
Earth	Protection Earth Ground	O1+	Output 1 +
		O1–	Output 1 –
Inputs		O2+	Output 2 +
+V	Power Source – External Trigger	O2-	Output 2 –
I1A	External Trigger A (polarity insensitive)	Auxiliary Interface	
I1B	External Trigger B (polarity insensitive)	TX	Auxiliary Interface TX
–V	Power Reference – External Trigger	RX	Auxiliary Interface RX
+V	Power Source – Inputs	SGND	Auxiliary Interface Reference

TCNM-ACBB1 Terminal Block Connectors			
I2A	Input 2 A (polarity insensitive)	ID-NET™	
I2B	Input 2 B (polarity insensitive)	REF	Network Reference
–V	Power Reference – Inputs	ID+	ID-NET™ network +
Shield		ID–	ID-NET™ network –
Shield	Network Cable Shield		
Main Interface			
RS232		RS485 Full-Duplex	RS485 Half-Duplex
TX		TX+	RTX+
RTS		TX–	RTX–
RX		[2]RX+	
CTS		[2]RX–	
SGND		SGND	SGND

CAUTION: Do not connect GND, SGND, and REF to different (external) ground references. GND, SGND, and REF are internally connected through filtering circuitry that can be permanently damaged if subjected to voltage drops over 0.8 Vdc.

5.1.2 25-pin Connector Pinout

The table below gives the pinout of the 25-pin male D-sub connector for connection to the power supply and input/output signals. Use this pinout when the barcode scanner is connected using the 25-pin connector:

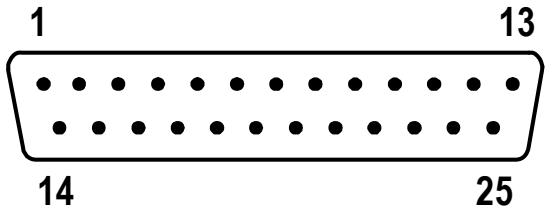

Figure 9. 25-pin male D-sub connector

25-pin D-sub male connector pinout		
Pin	Name	Function
13, 9	Vdc	Power supply input voltage +
25, 7	GND	Power supply input voltage –
1	CHASSIS	Cable shield connected to chassis
18	I1A	External Trigger A (polarity insensitive)
19	I1B	External Trigger B (polarity insensitive)
6	I2A	Input 2 A (polarity insensitive)
10	I2B	Input 2 B (polarity insensitive)
8	O1+	Output 1 +
22	O1–	Output 1 –

[2] Do not leave floating, see connection details.

25-pin D-sub male connector pinout		
Pin	Name	Function
11	O2+	Output 2 +
12	O2–	Output 2 –
20	RX	Auxiliary RS232 RX
21	TX	Auxiliary RS232 TX
23	ID+	ID-NET™ network +
24	ID–	ID-NET™ network –
14, 15, 16, 17	NC	Not Connected

25-pin D-sub male connector pinout				
Pin	Name	RS232	RS485 Full-Duplex	RS485 Half-Duplex
2	INTERFACE	TX	TX+	RTX+
3	(SW SELECTABLE)	RX	RX+ [3]	-
4		RTS	TX–	RTX–
5		CTS	RX– [3]	-

5.2 STEP 2 – Mounting and Positioning the System

1. To mount the barcode scanner, use the mounting bracket to obtain the most suitable position for the reader as shown in the figures below.

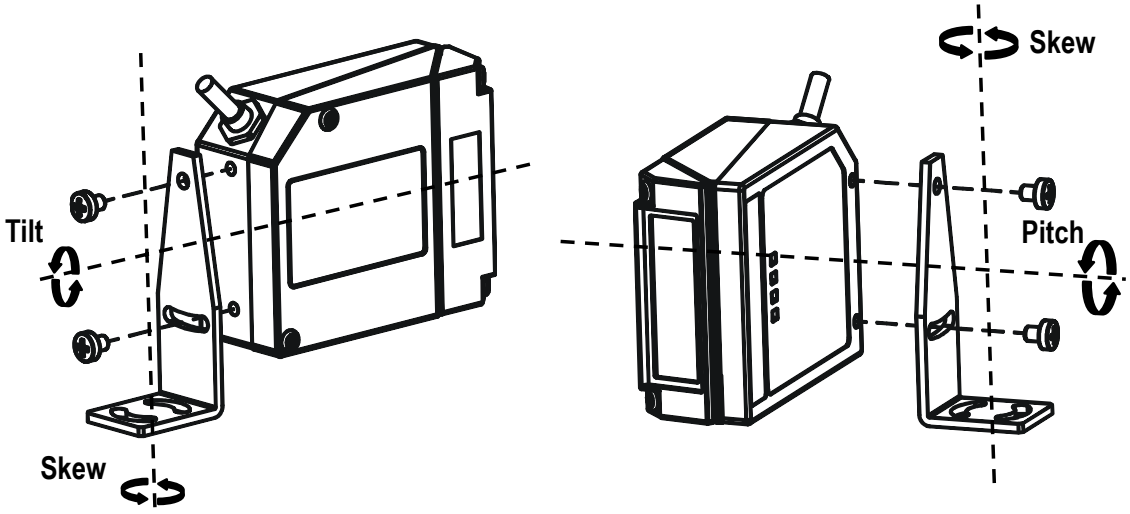

Figure 10. Positioning with mounting bracket

[3] Do not leave floating, see connection details.

2. When mounting the barcode scanner, take into consideration these three ideal label position angles: Skew 10° to 30°, Tilt 0° and Pitch 0°.

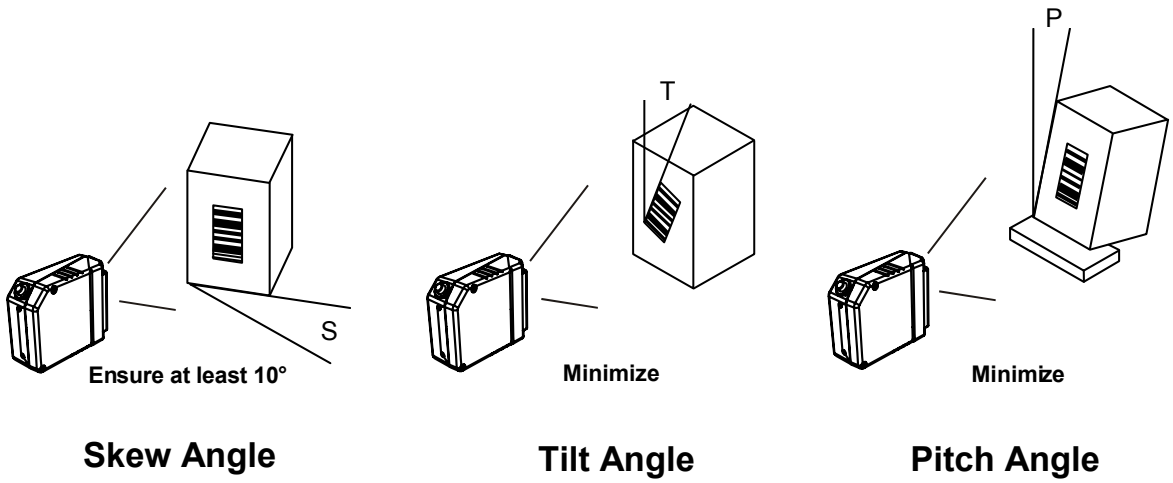

Figure 11. Skew, Tilt, and Pitch Angles

3. Refer to the Reading Diagrams to determine the distance at which your scanner should be positioned.

5.3 STEP 3 – SMART-TEACH Configuration

SMART-TEACH is the intuitive Human Machine Interface designed to improve ease of installation and maintenance. Status and diagnostic information are presented using the five colored LEDs, and the single push button gives immediate access to the following functions:

- AutoLearn—to self-detect and auto-configure for reading unknown barcodes (by type and length)
- AutoSetup—to self-optimize and auto-configure reading performance in demanding applications
- Test Mode with bar-graph visualization—to check static reading performance

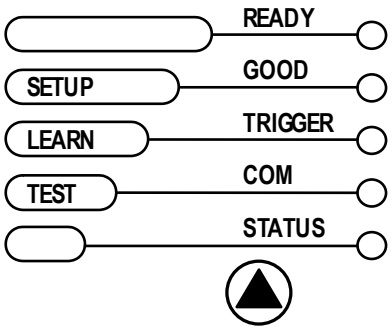

NOTE: If using the TCNM-ACM-OM110 accessory, when entering the SMART-TEACH interface, the Oscillating Mirror remains in the default fixed position (–15°) to make barcode reading easier while performing the SMART-TEACH functions.

Table 2: Indicators

Label	Color	Meaning
READY	Green	Indicates the device is ready to operate
GOOD	Green	Confirms successful reading
TRIGGER	Yellow	Indicates the status of the reading phase
COM	Yellow	Indicates active communication on main serial port
STATUS	Red	Indicates a NO READ result

During the reader startup (reset or restart phase), all the LEDs blink for one second.

On the back of the reader near the cable, the “POWER ON” LED indicates the laser scanner is correctly powered.

5.3.1 Auto Learn

If you are configuring your scanner using SMART-TEACH, you must start with the Auto Learn procedure.

1. Hold the SMART-TEACH push button pressed until the LEARN LED is on.
2. Release the button to enter the Auto Learn function. The reader begins to automatically detect and recognize barcodes (by type and length) that are presented to it[4]. The laser turns on and the LEARN LED blinks to indicate the ongoing process.

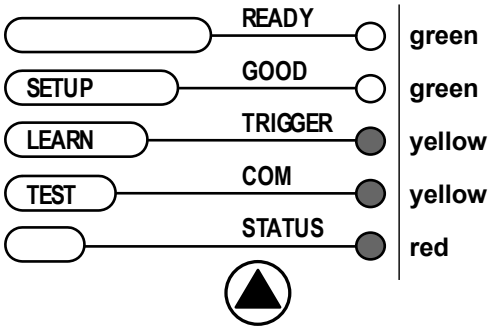

1. Place the desired barcode on the scanline.
2. Wait until the LEARN LED is steady ON (indicating the reader has detected the barcode).
3. Repeat, if needed, the above two steps to program up to 10 different barcodes (the LEARN LED returns to the blinking state for the next code). If more than one barcode is detected in the scan line, the Multi Label mode is enabled (refer to TCNM-AD/EX/SP Family Software Configuration Parameter Guide help file).

3. Exit the process by pressing the SMART-TEACH push button once. The scanner restarts at the end of the process, and then the detected barcodes are automatically configured in the scanner memory.

NOTE: If the barcode cannot be read because of low contrast or excessive ambient light, you can perform the AutoSetup function to optimize the optical parameters. Then you can perform Auto Learn to recognize the barcode symbology.

NOTE: On exit from Auto Learn, the following parameters are forced: Code Combination = Single Label, Reading Mode = Linear. If necessary, these parameters can be changed through GeniusPlus.

5.3.2 Auto Setup (Optional)

At the end of the Auto Learn procedure, you may follow the Auto Setup procedure to set up the reading parameters.

1. Hold the SMART-TEACH push button pressed until the SETUP LED is on.
2. Release the button to enter the Auto Setup function.
3. Once entered, if a barcode label is positioned in front of the scanline, the scanner automatically performs the optimal setup of the reading parameters for that specific barcode.

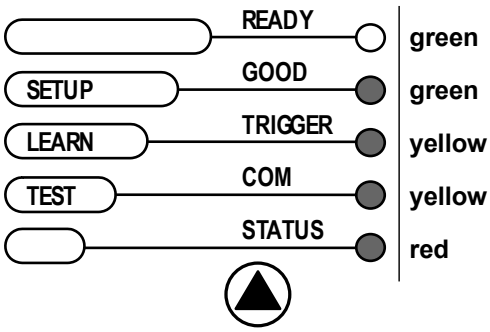

1. Place the desired barcode on the scanline.
2. Enter the Auto Setup function (the laser turns on and the SETUP LED blinks to indicate the ongoing process).
3. Wait until the SETUP LED stays steady ON (indicating the reader has detected the barcode).

This procedure ends either when the barcode is successfully decoded or after a timeout of about 7 seconds. The scanner restarts at the end of the process, and then the optimized reading parameters for that barcode are automatically configured in scanner memory.

NOTE: If your application has been configured using SMART-TEACH, go to STEP 5.

[4] In case of Programming Barcodes, refer to the “Setup Procedure Using Programming Barcodes” document in the product CD.

5.3.3 Reset Scanner to Factory Default (Optional)

To reset the scanner to the factory default values, hold down the SMART-TEACH push button while powering up the scanner. At the end of the procedure (about 5–6 seconds), the Configuration and Environmental parameters are reset, and all LEDs blink simultaneously three times.

5.4 STEP 4 – Installing GeniusPlus Configuration Program

GeniusPlus is a scanner configuration tool that provides several important advantages:

- Wizard approach for new users
- Multi-language version
- Defined configuration directly stored in the reader
- Communication protocol independent from the physical interface allowing to consider the reader as a remote object to be configured and monitored

To install GeniusPlus, insert the GeniusPlus CD-ROM, wait for the CD to autorun, and follow the installation procedure. The software is compatible with Windows 98, 2000/NT, XP, Vista, Windows 7, and Windows 8.

This configuration procedure assumes scanner connection to a TCNM-ACBB1. GeniusPlus, running on a laptop computer, is connected to the scanner auxiliary port through the TCNM-ACBB1 9-pin connector. To communicate with the scanner, GeniusPlus performs an auto baud rate detection starting from its default parameters, which are 115200, 8, N, 1. These parameters can also be set in the GeniusPlus Tools > Options > Communications window.

5.4.1 Wizard for Quick Reader Setup

After installing the GeniusPlus software program, the following window appears asking the user to choose the desired configuration level.

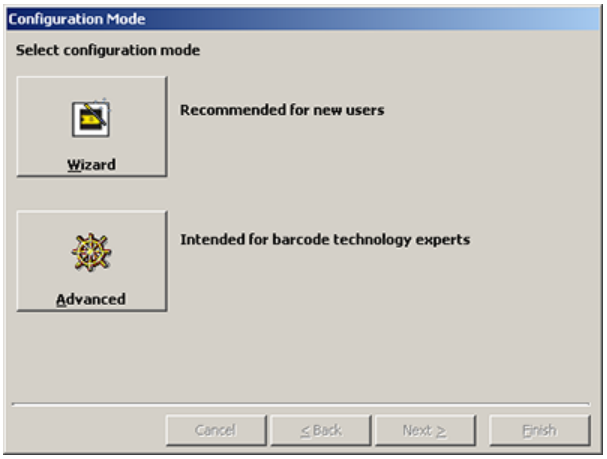

The Wizard option is advised for rapid configuration or new users because it shows a step-by-step scanner configuration.

1. Click Create New to create a new configuration

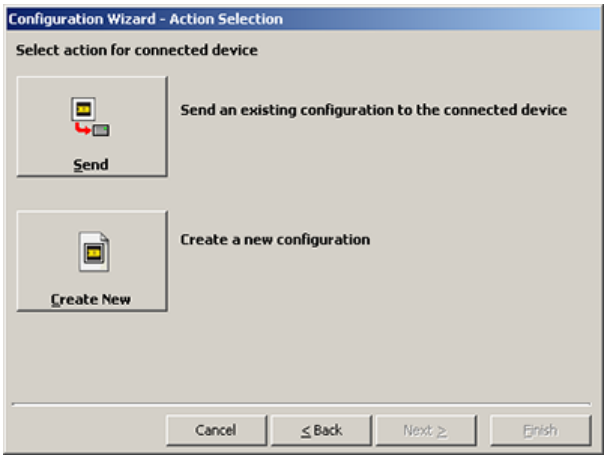

a. Select a barcode and drag it into one of the slots at the bottom. Click Next to configure the selected barcode(s) on the following screen(s).

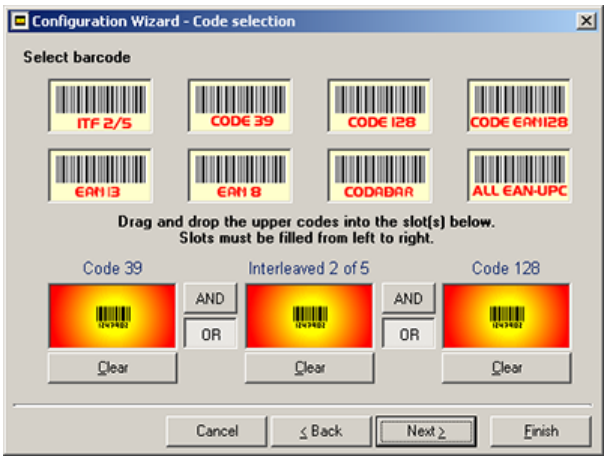

b. Select Operating Mode and click Next.

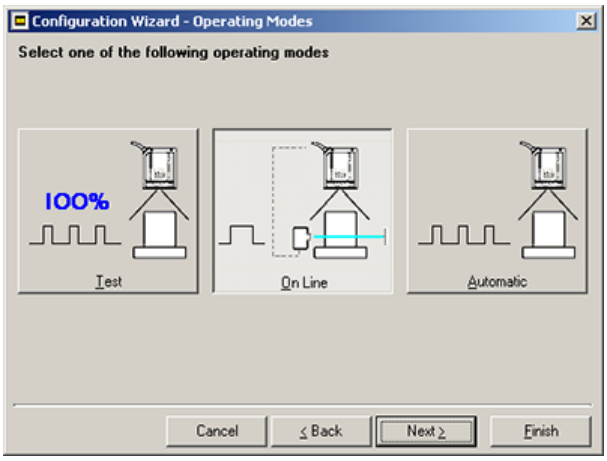

On Line operating mode requires the reader to be connected to an External Trigger/Presence Sensor using I1A and I1B inputs.

Automatic operating mode does not require connection to an external Presence Sensor. When working in this mode, the reader is continuously scanning while the reading phase is activated each time a barcode enters the reader reading zone. The reader stops reading after an N number of scans without a code. Barcode characters are transmitted on the serial interface. In case of a failed reading phase, no message is sent to the host computer.

c. Configure one or both digital outputs by selecting the desired Activation Event, Deactivation Event, and specifying Deactivation Timeout. Click Next.



2. After defining the parameter values, the following window appears allowing you to complete the reader configuration as follows:
    - Save the configuration to disk
    - Switch to Advanced Mode
    - Send the configuration to the scanner



3. After sending the configuration to the scanner, click Next. You have completed the configuration process. Click Finish.

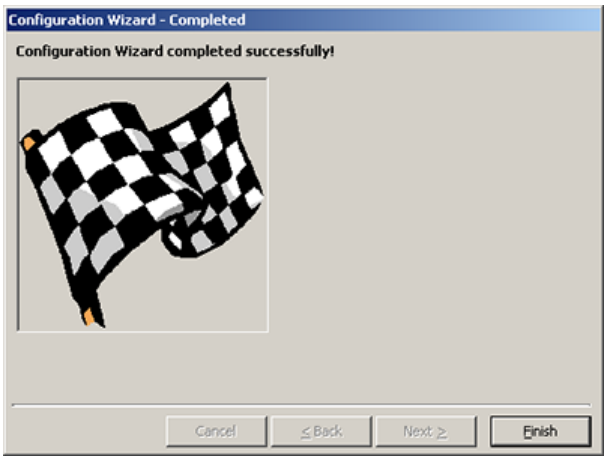

4. After clicking Finish, the System Information window displays.

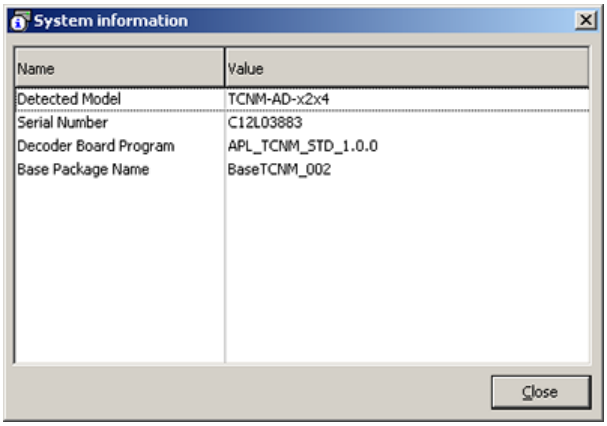

5.5 STEP 5 – Test Mode

Use a code suitable to your application to test the system.

1. To enter Test Mode, hold down the SMART-TEACH push button until the TEST LED is on.
2. Once entered, the bar graph on the five LEDs is activated and if the scanner starts reading barcodes, the bar graph shows the Good Read Rate. In case of no-read condition, only the STATUS LED is on and blinking.

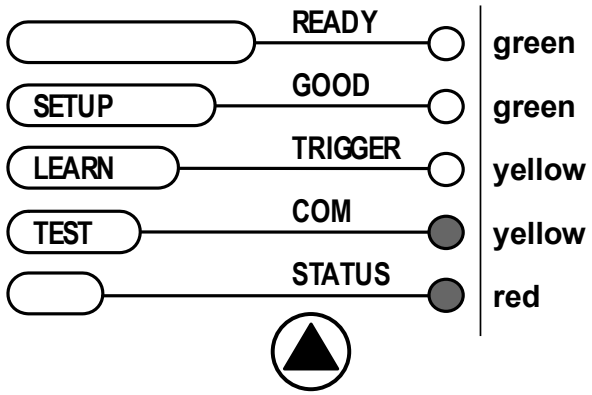

3. To exit Test Mode, press the SMART-TEACH push button once.

NOTE: By default, the barcode scanner automatically exits Test Mode after two minutes.

6 Advanced Scanner Configuration

The Advanced selection is available when starting the GeniusPlus application and is designed for expert users to complete a more detailed scanner configuration. By choosing this option it is possible to start a new scanner configuration or to open and modify an old one. Refer to *TCNM - AD/EX/SP Family Software Configuration Parameter Guide* for more information.

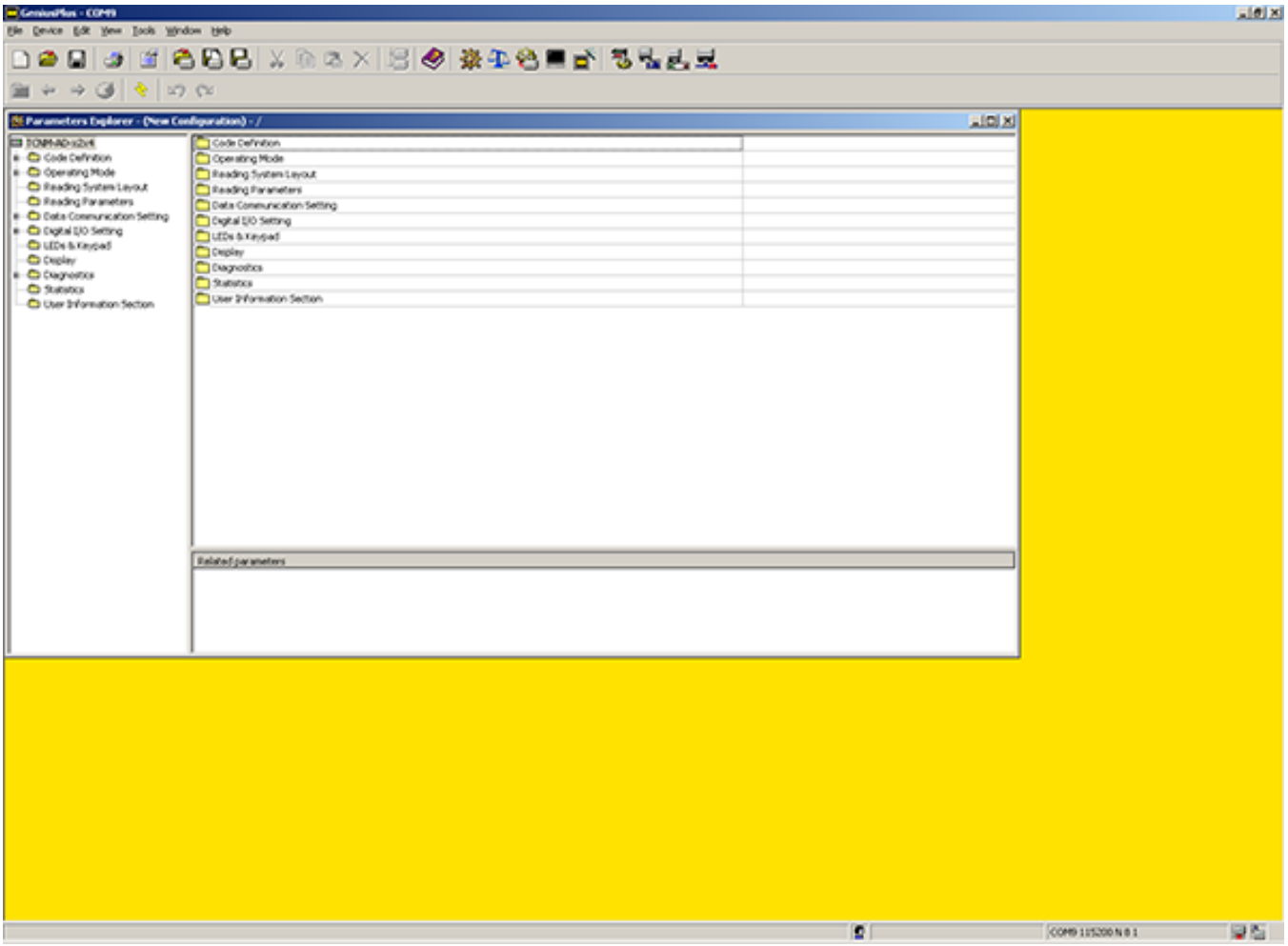

6.1 SMART-TEACH Human Machine Interface

SMART-TEACH is the intuitive Human Machine Interface designed with the precise goal of improving ease of installation and maintenance.

Status and diagnostic information are clearly presented by means of five colored LEDs, whereas the single multi-function key gives immediate access to relevant functions:

- Autosetup—to self-optimize reading performance in demanding application
- Autolearn—to self-detect unknown barcodes
- Test Mode with bar-graph visualization—to check static reading performance

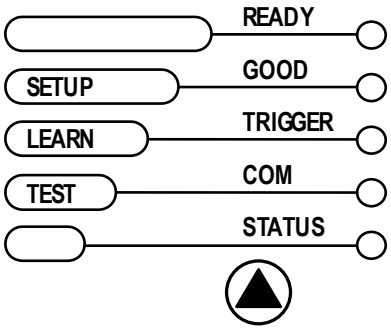

The colors and meaning of the five LEDs when in the one of the operating modes (On Line, Automatic, or Continuous) are illustrated in *Indicators* on page 11.

NOTE: The SMART-TEACH functions do not work if the motor or laser are turned off, see *Troubleshooting* on page 50 for details.

6.1.1 Diagnostic Indication

The STATUS and READY LEDs blink simultaneously to signal the presence of a failure. Diagnostic message transmission on interfaces can be enabled to provide details about specific failure conditions.

At the same time, one or more LEDs light up according to the following scheme:

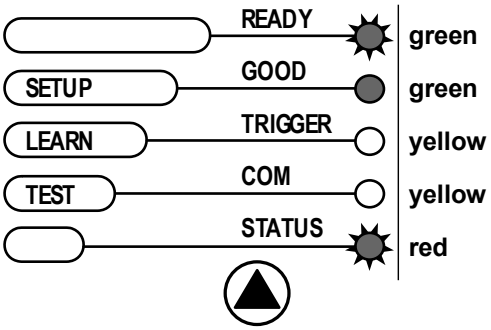

LED	STATUS
READY	Blink
GOOD	ON to indicate any failure different than motor or laser failures.
TRIGGER	ON to indicate a motor failure.
COM	ON to indicate a laser failure.
STATUS	Blink

6.1.2 SMART-TEACH Functions

Quick access to the following functions is provided by using the SMART-TEACH button:

1. Press the button (the STATUS LED will give a visual feedback)
2. Hold the button until the specific function LED is on (TEST, LEARN or SETUP)
3. Release the button to enter the specific function

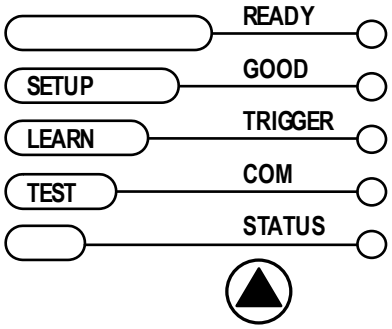

After button is pressed, the cycle of LEDs activation is as follows:

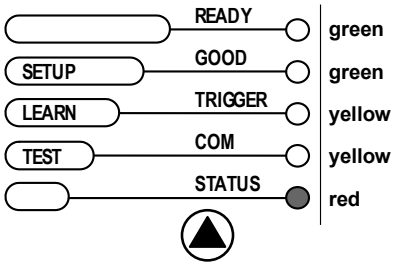

Figure 12. Release button to Exit

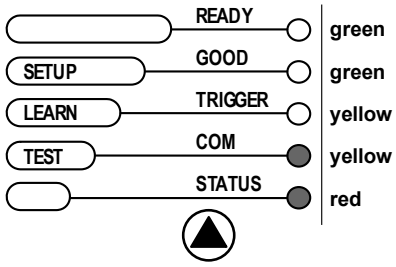

Figure 13. Release button to enter Test mode

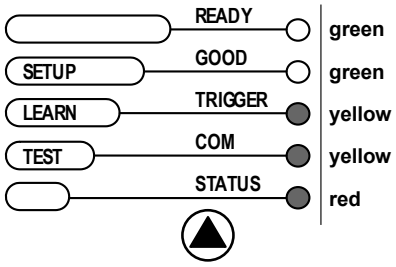

Figure 14. Release button to enter AutoLearn

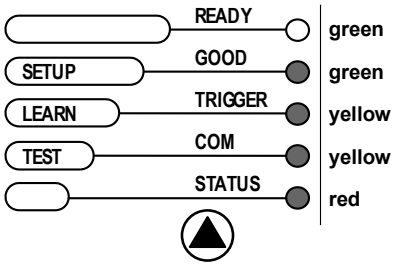

Figure 15. Release button to enter AutoSetup

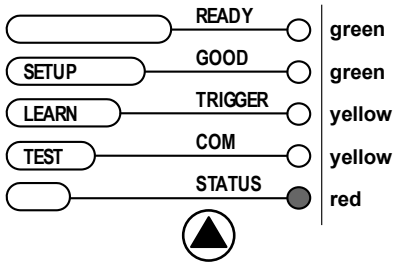

Figure 16. Release button to Exit

6.1.2 Test Mode Function

In Test Mode, the bar graph on the five LEDs is activated and if the scanner starts reading barcodes, the bar graph shows the Good Read Rate. In case of no read condition, only the STATUS LED is on and blinks.

To exit the Test Mode, press the SMART-TEACH push button once.

6.1.2 AutoLearn Function

In AutoLearn, the reader starts to automatically detect and recognize barcodes (by type and length) that are presented to it. The laser turns on and the LEARN LED blinks to indicate the ongoing process.

The procedure is as follows:

1. Place the desired barcode on the scanline.
2. Wait until the LEARN LED stays steady on (indicating the reader has detected the barcode).
3. Repeat, if needed, the above two steps to program up to 10 different barcodes (the LEARN LED returns to the blinking state for the next code). If more than one barcode is detected in the scan line, the Multi Label mode is enabled.
4. Exit the process by pressing the SMART-TEACH push button once.

The scanner restarts at the end of the process, and the detected barcodes are automatically configured in scanner memory.

6.1.2 AutoSetup Function

In AutoSetup, if a barcode label is positioned in front of the scanline, the scanner automatically performs the optimal setup of the reading parameters for that specific barcode.

The procedure is as follows:

1. Place the desired barcode on the scanline.
2. Enter the AutoSetup function (the laser turns on and the SETUP LED blinks to indicate the ongoing process).
3. Wait until the SETUP LED stays steady on (indicating the reader has detected the barcode).

This procedure ends either when the barcode is successfully decoded or after a timeout of about 7 (seven) seconds.

The scanner restarts at the end of the process, and then the optimized reading parameters for that barcode are automatically configured in scanner memory.

NOTE:

The AutoSetup function does not modify the programmed barcode symbologies. If needed, the AutoLearn function can be performed after AutoSetup.

6.1.2 Reset Scanner to Factory Default

See *Reset Scanner to Factory Default (Optional)* on page 19.

7 TCNM-ACBB1 Electrical Connections

All laser barcode scanners are equipped with a cable terminated by a 25-pin male D-sub connector for connection to the power supply and input/output signals. We recommend making system connections through a TCNM-ACBB1 connection box because they offer the advantages of easy connection, device replacement, and filtered reference signals.

This table lists the pinout of the TCNM-ACBB1 terminal block connectors. Use this pinout when the barcode scanner is connected using the TCNM-ACBB1.

Table 3: TCNM-ACBB1 Terminal Block Connectors

Input Power	
Vdc	Power Supply Input Voltage +
GND	Power Supply Input Voltage –
Earth	Protection Earth Ground

Inputs	
+V	Power Source – External Trigger
I1A	External Trigger A (polarity insensitive)
I1B	External Trigger B (polarity insensitive
–V	Power Reference – External Trigger
+V	Power Source – Inputs
I2A	Input 2 A (polarity insensitive)
I2B	Input 2 B (polarity insensitive)
–V	Power Reference – Inputs

Outputs	
+V	Power Source - Outputs
–V	Power Reference - Outputs
O1+	Output 1 +
O1–	Output 1 –
O2+	Output 2 +
O2–	Output 2 –

Auxiliary Interface	
TX	Auxiliary Interface TX
RX	Auxiliary Interface RX
SGND	Auxiliary Interface Reference

ID-NET™	
REF	Network Reference
ID+	ID-NET™ network +
ID–	ID-NET™ network –
Shield	Network Cable Shield

Main Interface			
	RS232	RS485 Full-Duplex	RS485 Half-Duplex
	TX	TX+	RTX+
	RX	[5]RX+	

Main Interface			
	RTS	TX–	RTX–
	CTS	[5]RX–	
	SGND	SGND	SGND

NOTE: To avoid electromagnetic interference when the scanner is connected to a TCNM-ACBB1 connection box, verify the jumper positions in the TCNM-ACBB1.

7.1 Power Supply

Supply 10 to 30V dc power to the scanner through the TCNM-ACBB1 spring clamp terminal pins as shown. Connect the device CHASSIS to earth ground (Earth) by setting the appropriate jumper in the TCNM-ACBB1 connection box. See the TCNM-ACBB1 Installation Manual for details.

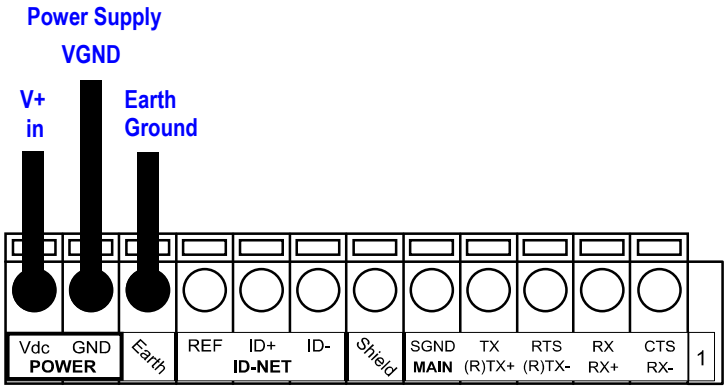

7.2 Main Serial Interface

The signals relative to the following serial interface types are available on the TCNM-ACBB1 spring clamp terminal blocks.

If the interface type is not compatible with the current communication handshaking, then the system forces the handshake to none.

Set the main interface type and the relative parameters (baud rate, data bits, etc.) using the GeniusPlus utility program.

Details regarding the connections and use of the interfaces are given in the next sections.

7.2.1 RS232 Interface

The serial interface is used for point-to-point connections; it handles communication with the host computer and allows both transmission of code data and the programming of the scanner. This is the default setting.

The following pins are used for RS232 interface connection.

TCNM-ACBB1	Function
TX	Transmit Data
RX	Receive Data
RTS	Request To Send

[5] Do not leave floating, see connection details.

TCNM-ACBB1	Function
CTS	Clear To Send
SGND	Signal Ground

It is always advisable to use shielded cables. The overall maximum cable length must be less than 15 m (49.2 ft).

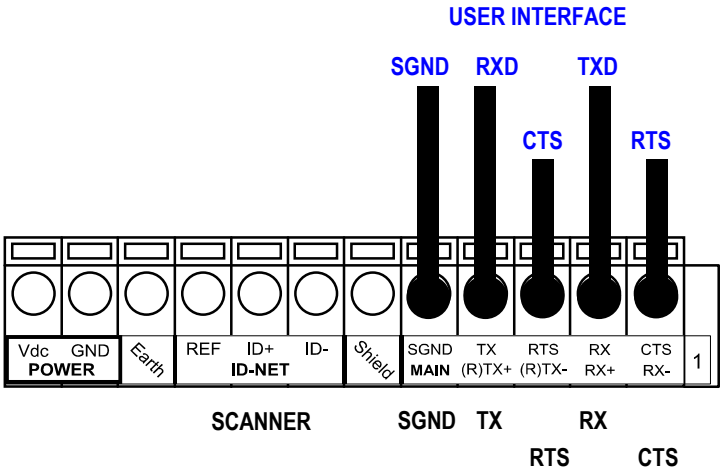

The RTS and CTS signals control data transmission and synchronize the connected devices.

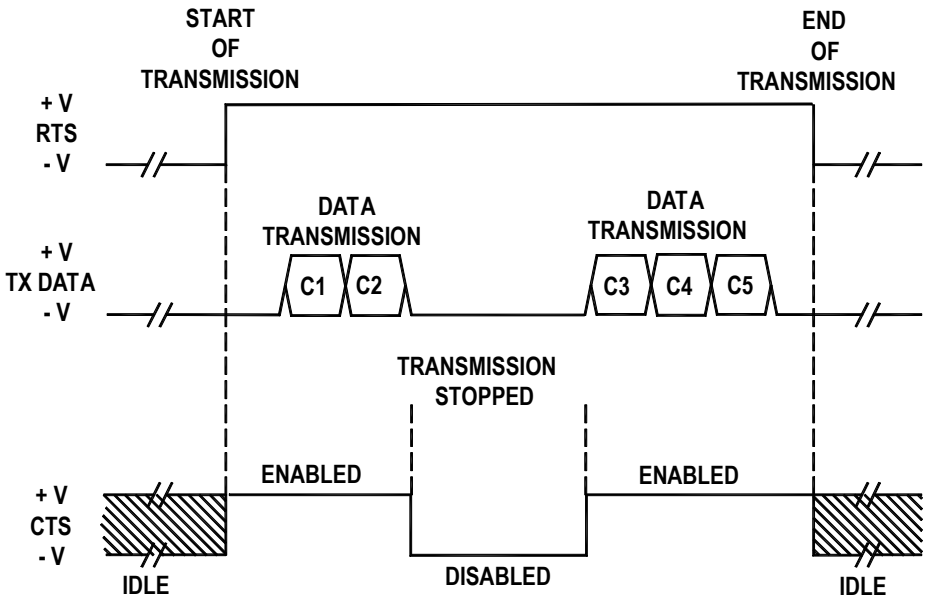

If the RTS/CTS handshaking protocol is enabled, the barcode scanner activates the RTS output to indicate a message is to be transmitted. The receiving unit activates the CTS input to enable the transmission.

7.2.2 RS485 Full-Duplex Interface

The RS485 full-duplex (5 wires + shield) interface is used for non-polled communication protocols in point-to-point connections over longer distances (maximum of 1200 m / 3940 ft) than those acceptable for RS232 communications or in electrically noisy environments.

The following pins are used for RS485 connection.

TCNM-ACBB1	Function
TX+	RS485 Transmit Data +
RX+	RS485 Receive Data +
TX–	RS485 Transmit Data –
RX–	RS485 Receive Data –
SGND	Signal Ground

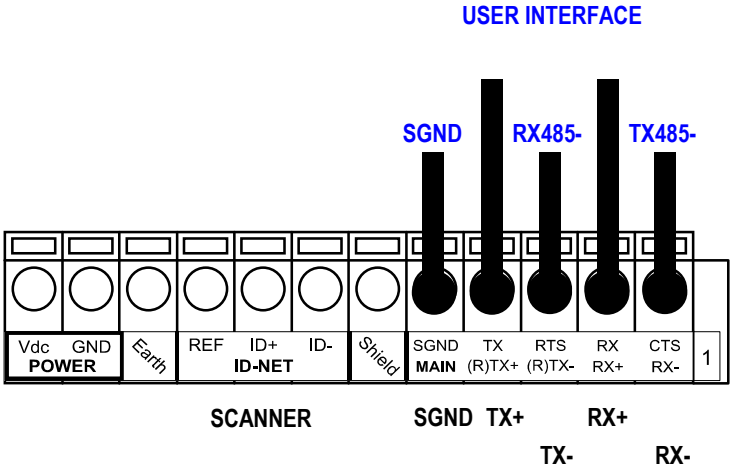

NOTE: For applications that do not use RX485 signals, do not leave these lines floating but connect them to SGND as shown below.

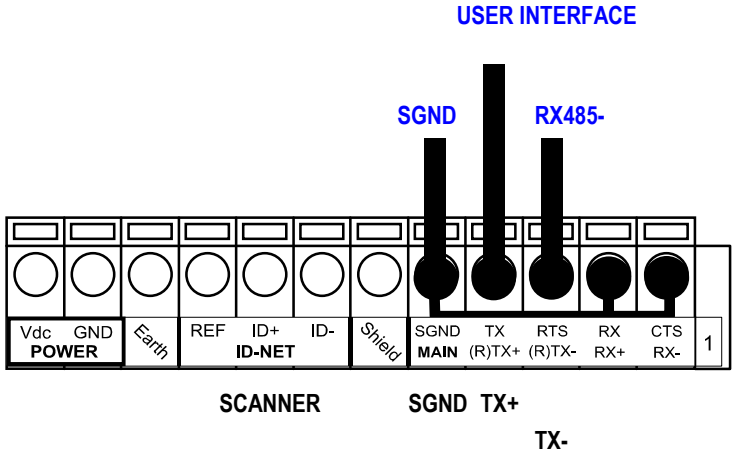

7.3 Auxiliary RS232 Interface

The auxiliary serial interface is used exclusively for RS232 point-to-point connections.

The parameters relative to the aux interface (baud rate, data bits, etc.) as well as particular communication modes such as LOCAL ECHO can be defined using the GeniusPlus utility program.

The 9-pin female Auxiliary Interface connector inside the TCNM-ACBB1 is the preferred connector for device configuration or communication monitoring.

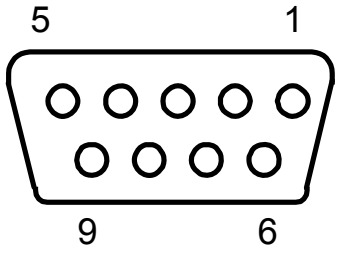

Figure 17. 9-pin female connector

If permanent system wiring is required, the following pins are used to connect the RS232 auxiliary interface:

TCNM-ACBB1	Function
RX	Auxiliary Interface Receive Data
TX	Auxiliary Interface Transmit Data
SGND	Auxiliary Interface Reference

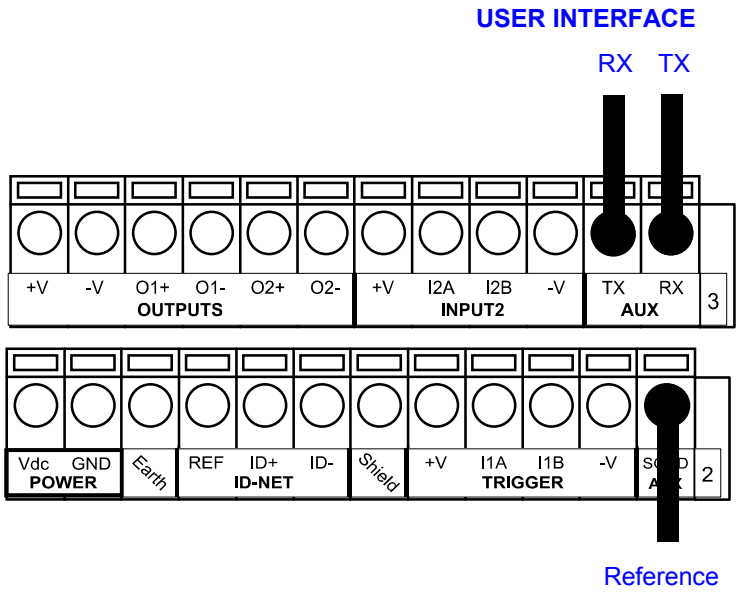

Figure 18. RS232 Auxiliary Interface Connections

NOTE: Do not connect the auxiliary Interface to the TCNM-ACBB1 spring clamp connectors and the 9-pin connector simultaneously.

7.4 Inputs

There are two opto-coupled polarity insensitive inputs available on the scanner: Input 1 (External Trigger) and Input 2, a generic input. The electrical features of both inputs are:

Maximum voltage: 30V dc
Maximum current: 12 mA (scanner) + 12 mA (TCNM-ACBB1)

An anti-disturbance filter is implemented in software on both inputs so that the minimum pulse duration is approximately 5 milliseconds. This value can be increased through the software parameter Debounce Filter, see the software help file.

TCNM-ACBB1	Function
+V	Power Source - External Trigger
I1A	External Trigger A (polarity insensitive)
I1B	External Trigger B (polarity insensitive)
-V	Power Reference - External Trigger

The External Trigger input is used in the online operating Mode and tells the scanner to scan for a code. The active state of this input is selected in software.

The yellow Trigger LED is on when the active state of the External Trigger corresponds to ON.

This input is opto-coupled and can be driven by both an NPN and PNP type command. The connections are indicated in the following diagrams:

External Trigger Input Connections Using Barcode Scanner Power

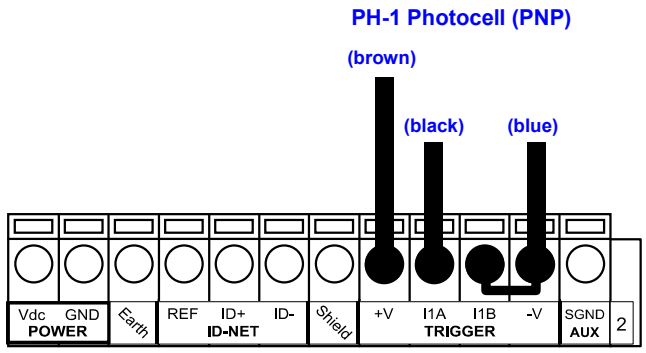

Figure 19. PH-1 (PNP) External Trigger Using Barcode Scanner Power

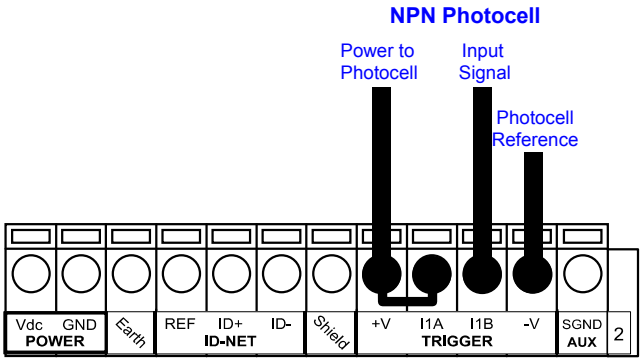

Figure 20. NPN External Trigger Using Barcode Scanner Power

External Trigger Input Connections Using External Power

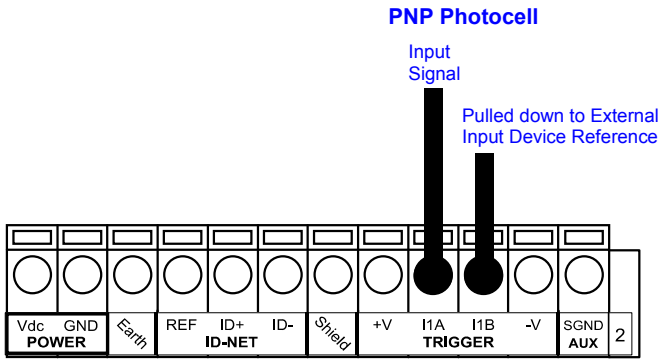

Figure 21. PNP External Trigger Using External Power

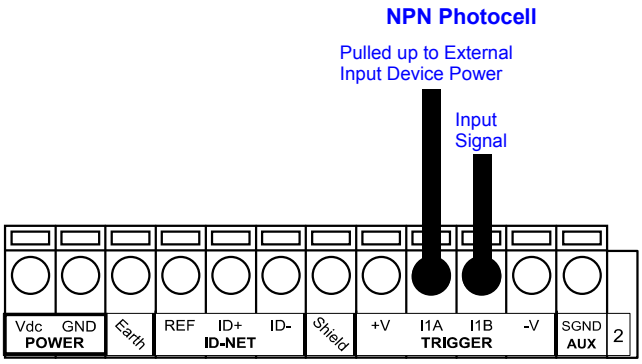

Figure 22. NPN External Trigger Using External Power

TCNM-ACBB1	Function
+V	Power Source - Inputs
I2A	Input 2 A (polarity insensitive)
I2B	Input 2 B (polarity insensitive)
-V	Power Reference - Inputs

Input 2 Connections Using Barcode Scanner Power

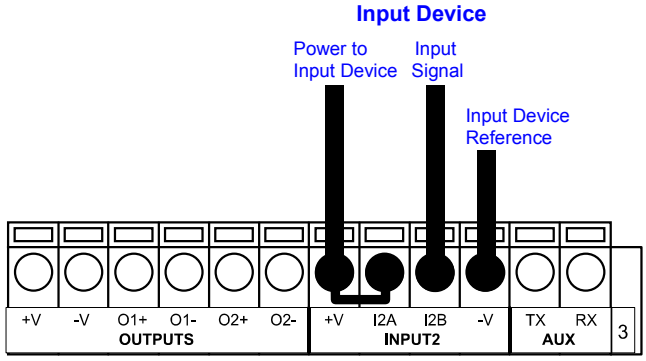

Figure 23. PNP Input 2 Using Barcode Scanner Power

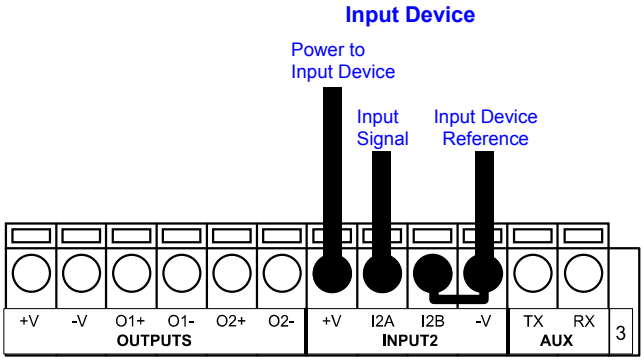

Figure 24. NPN Input 2 Using Barcode Scanner Power

Input 2 Connections Using External Power

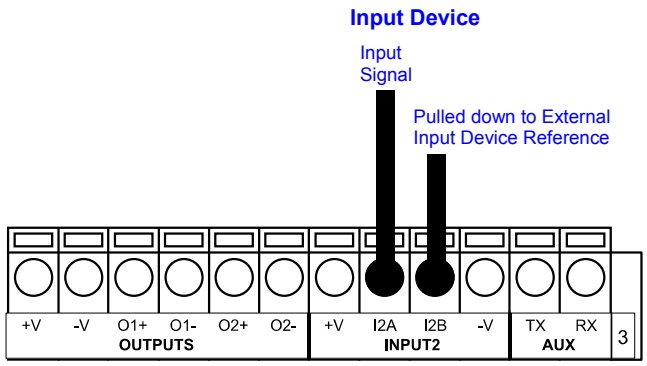

Figure 25. PNP Input 2 Using External Power

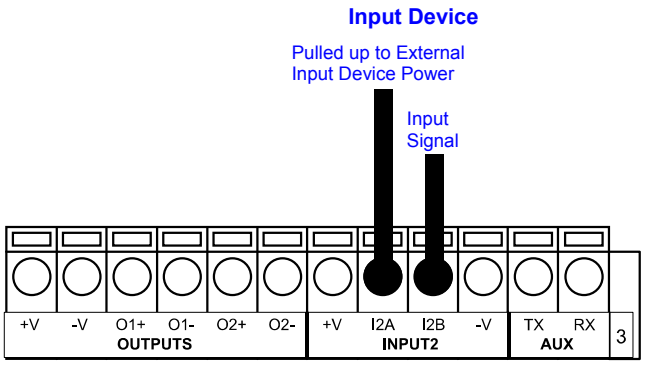

Figure 26. NPN Input 2 Using External Power

7.4.1 Code Verifier

If the barcode scanner is used as a Code Verifier, the verifier code can be configured in software through the GeniusPlus configuration program. However it is also possible to use one of the inputs to trigger when the scanner should store a code read as the verifier code.

To read the verifier code:

1. Enable the Code Verifier parameter, and
2. Save the configuration parameters to allow correct Code Type reading to the scanner.

When the selected input is activated, the next read code is stored as the verifier code in the scanner's non-volatile (Flash) memory. For more details see the Verifier Parameters in the TCNM-AD/EX/SP Family Software Configuration Parameter Guide help file.

7.5 Outputs

Two general purpose outputs are available.

TCNM-ACBB1	Function
+V	Power Source - Outputs
O1+	Output 1 +
O1–	Output 1 –
O2+	Output 2 +
O2–	Output 2 –
–V	Power Reference Outputs

The meaning of Output 1 and Output 2 can be defined by the user (No Read, Right, Wrong, etc.). By default, Output 1 is associated with the No Read event, which activates when the code signaled by the external trigger is not decoded. Output 2 is associated with the Complete Read event, which activates when all the selected codes are correctly decoded.

The output signals are fully programmable being determined by the configuration of Activation/Deactivation events, Deactivation Timeout or a combination of the two.

Output Connections Using Barcode Scanner Power

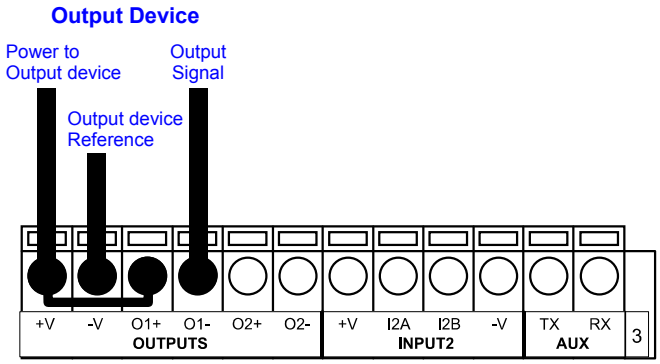

Figure 27. Open Emitter Output Using Barcode Scanner Power

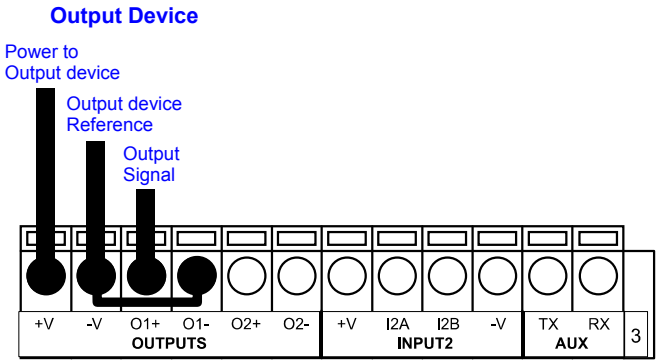

Figure 28. Open Collector Output Using Barcode Scanner Power

Output Connections Using External Power

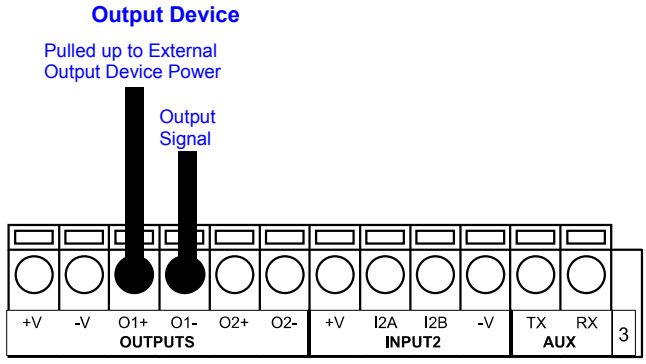

Figure 29. Open Emitter Output Using External Power

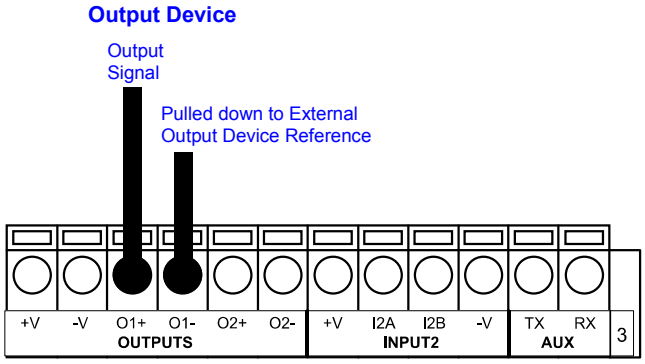

Figure 30. Open Collector Output Using External Power

V_{CE} max = 30V dc

40 mA continuous max.; 130 mA pulsed max.

7.6 User Interface - Host

The following table contains the pinout for standard RS232 PC Host interface. For other user interface types, please refer to their manual.

9-pin male connector		25-pin male connector	
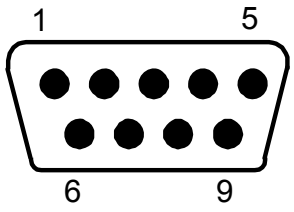		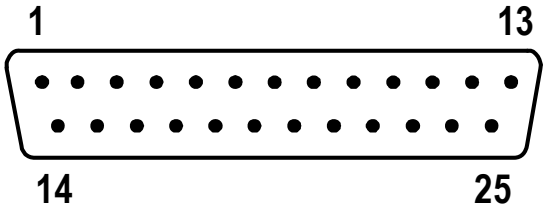	
Pin	Name	Pin	Name
2	Rx	3	Rx
3	Tx	2	Tx
5	GND	7	GND
7	RTS	4	RTS
8	CTS	5	CTS

8 Typical Layouts

The following typical layouts refer to system hardware configurations. Dotted lines in the figures refer to optional hardware configurations within the particular layout. These layouts also require the correct setup of the software configuration parameters.

8.1 Point-to-Point

In a serial interface layout, data is transmitted to the Host on the main serial interface.

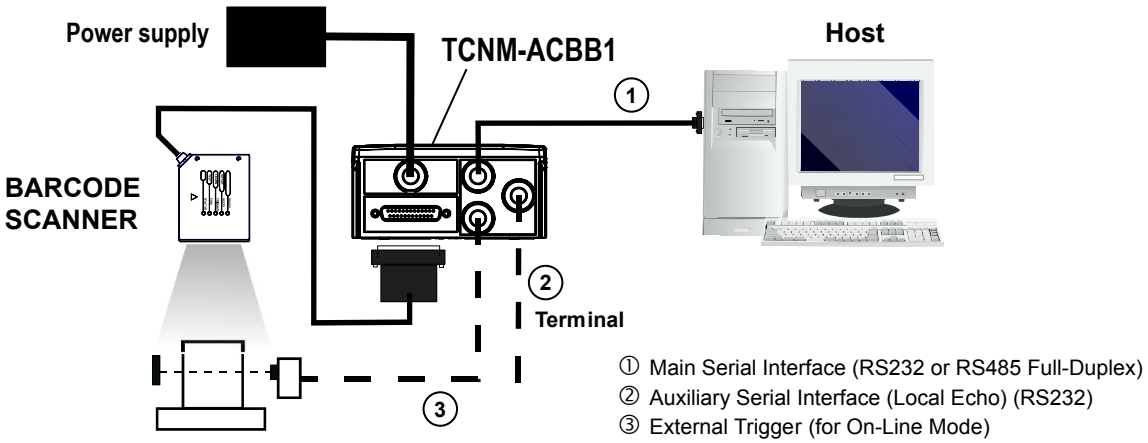

Figure 31. Serial Interface Point-to-Point Layout

- In Local Echo communication mode, data is transmitted on the RS232 auxiliary interface independently from the main interface selection.
- When On Line Operating mode is used, the scanner is activated by an External Trigger (photoelectric sensor) when the object enters its reading zone.

8.2 Pass-Through Mode

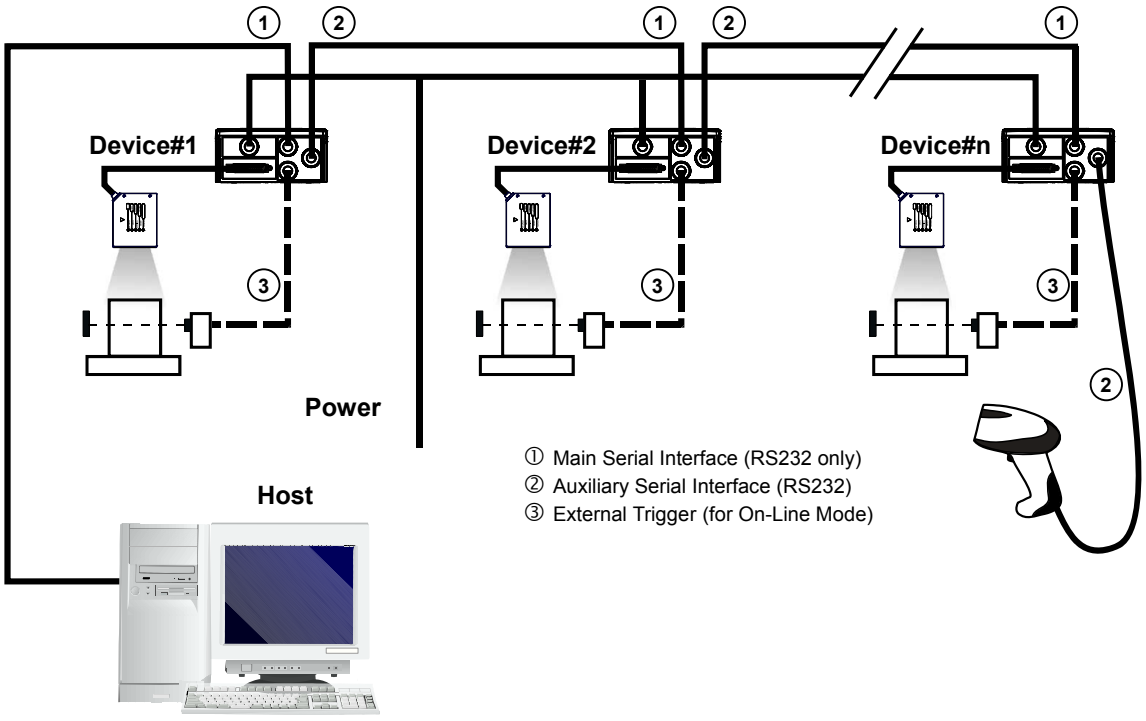

Figure 32. Pass-Through Layout

Pass-through mode allows two or more devices to be connected to a single external serial interface. Each barcode scanner transmits the messages received by the Auxiliary interface onto the Main interface. All messages are passed through this chain to the host.

When On Line Operating mode is used, the scanner is activated by an External Trigger (photoelectric sensor) when the object enters its reading zone.

Applications can be implemented to connect a device such as a hand-held reader to the Auxiliary port of the last scanner in the chain for manual code reading capability.

9 Reading Features

9.1 Advanced Code Reconstruction

The traditional way of barcode reading could be called “Linear Reading”. In this case, the laser beam crosses the barcode symbol from its beginning to its end as shown in the following figure:

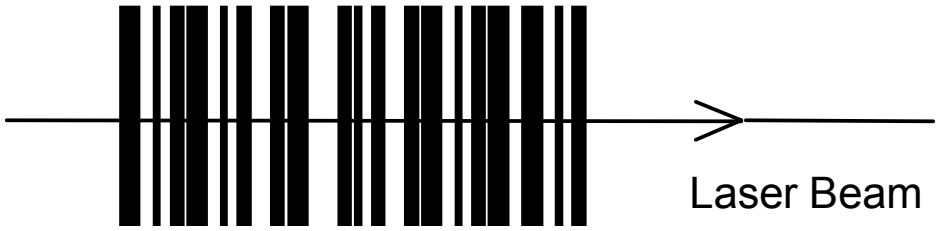

Figure 33. Linear Reading

In Advanced Code Reconstruction (ACR) mode it is no longer necessary for the laser beam to cross the label from beginning to end. With just a set of partial scans on the label (obtained using the motion of the label itself), the scanner is able to “reconstruct” the barcode. A typical set of partial scans is shown in the figure below:

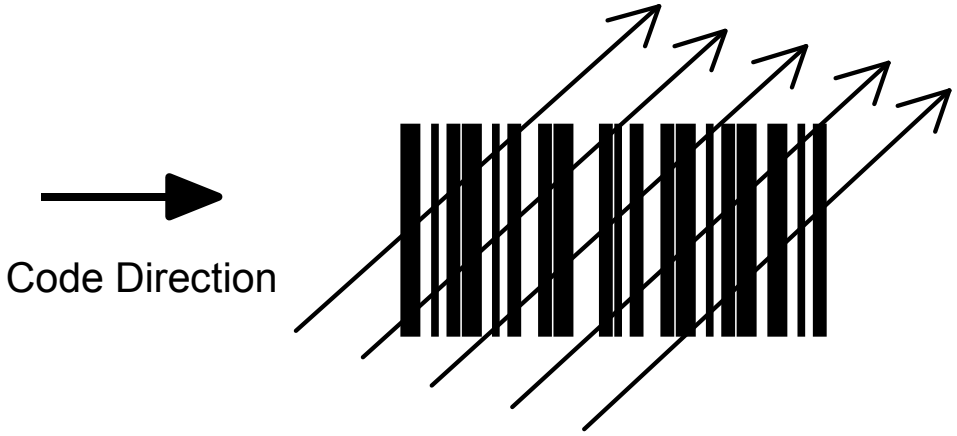

Figure 34. Partial Scans

None of the partial scans contains the whole label. The decoder aligns each partial scan correctly and combines them to obtain the entire code. The alignment is performed by calculating the time difference from one partial scan to another using a reference code element. ACR therefore has an intrinsic ability to increase the reading percentage of damaged codes as in the examples below:



Figure 35. ACR Readable Codes

ACR is disabled by default but can be enabled for the following code types:

- Code 25 Interleaved
- Code 39 Family
- Codabar
- GS1 DataBar
- Code 128/EAN128
- EAN/UPC (without Add-Ons)
- Code 93
- GS1 DataBar Expanded

9.1.1 Important Advanced Code Reconstruction Reading Conditions

- Do not use Advanced Code Reconstruction (ACR) for omni-directional reading stations
- Code concatenation and ACR are not compatible and therefore cannot be enabled simultaneously
- Stacked codes and ACR are not compatible
- Codes shorter than 4 digits, while readable linearly, cannot be reconstructed in ACR

NOTE: To maximize scanner performance in Advanced Code Reconstruction Reading applications:

- Enable only the code symbologies used in the application and disable any code symbologies not used in the application
- Reconstruct only one code label at a time
- Use conveyor speeds less than or equal to 1.0 m/s

9.1.2 Tilt Angle for Advanced Code Reconstruction

The most important parameter in Advanced Code Reconstruction is the value of the maximum tilt angle (α maximum) under which the code reconstruction process is still possible.

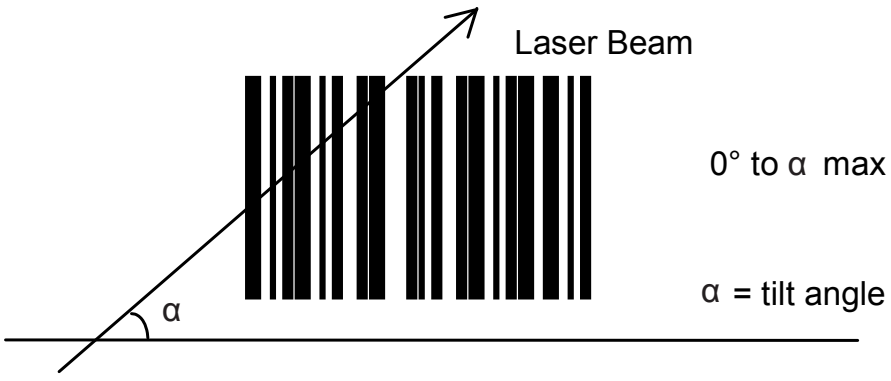

Figure 36. Tilt Angle

The decoder will be able to read the label with a tilt angle between + α max and – α max as shown in the following figure:

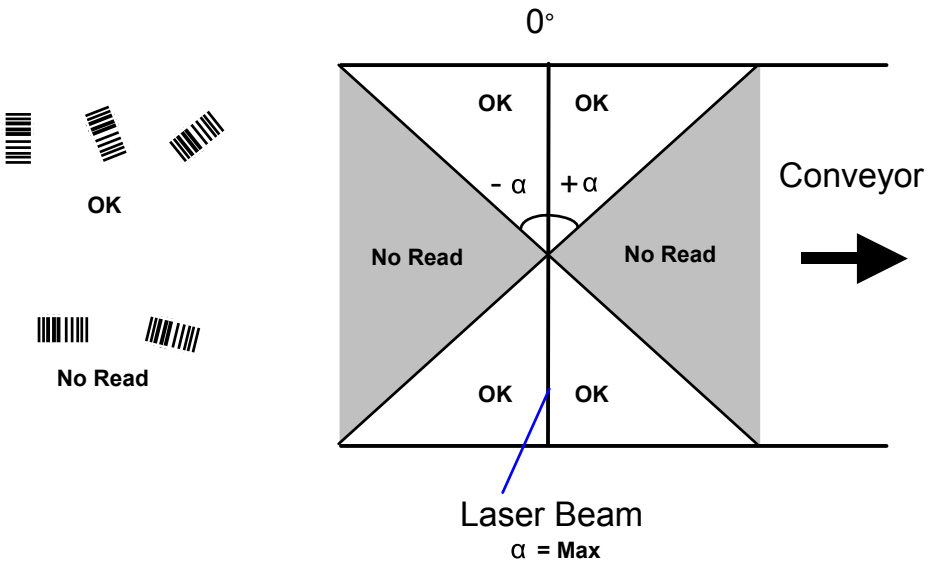

Figure 37. Reading Zones with α Max

NOTE: Although tilt angles of 45° can be obtained, barcode scanners are not designed to create omni-directional reading stations using two scanners in an X-pattern.

9.1.3 Advanced Code Reconstruction Reading Conditions

The following tables describe the minimum code height requirements (in mm) for standard ACR applications depending on the code symbology and the given reading conditions.

- ANSI Grade B minimum
- 800 scans/sec
- Three code symbologies enabled simultaneously
- Uniform background

Minimum Code Height for ACR-Lite Reading (mm)

Table 4: 2/5 Interleaved (Ratio 2.5:1)

Code Resolution (mm)	Conveyor Speed (m/s)					
	45° max			30° max		
	0.5	0.75	1	0.5	0.75	1
0.20	17	20	23	12	14	16
0.35	28	30	32	18	20	22
0.50	34	36	38	23	25	27

Table 5: Code 39 (Ratio 2.5:1; Interdigit = Module Size)

Code Resolution (mm)	Conveyor Speed (m/s)					
	45° max			30° max		
	0.5	0.75	1	0.5	0.75	1
0.20	16	19	22	12	14	16
0.35	26	28	30	17	19	21

Code Resolution (mm)	Conveyor Speed (m/s)					
	45° max			30° max		
	0.5	0.75	1	0.5	0.75	1
0.50	31	33	35	21	23	25

Table 6: Code 128 - EAN 128

Code Resolution (mm)	Conveyor Speed (m/s)					
	45° max			30° max		
	0.5	0.75	1	0.5	0.75	1
0.20	12	15	18	9	11	14
0.35	22	25	28	13	16	19
0.50	25	27	30	17	20	23

9.2 Linear Code Reading

The number of scans performed on the code by the barcode scanner and therefore the decoding capability is influenced by the following parameters:

- Number of scans per second
- Code motion speed
- Label dimensions
- Scan direction with respect to code motion

At least five scans during the code passage should be allowed to ensure a successful read.

9.2.1 Step-Ladder Mode

If scanning is perpendicular to the code motion direction, the number of effective scans performed by the reader is given by the following formula:

```
SN = [(LH ÷ LS) × SS] – 2
```

where:

SN = number of effective scans
LH = label height (in mm)
LS = label movement speed in (mm/s)
SS = number of scans per second

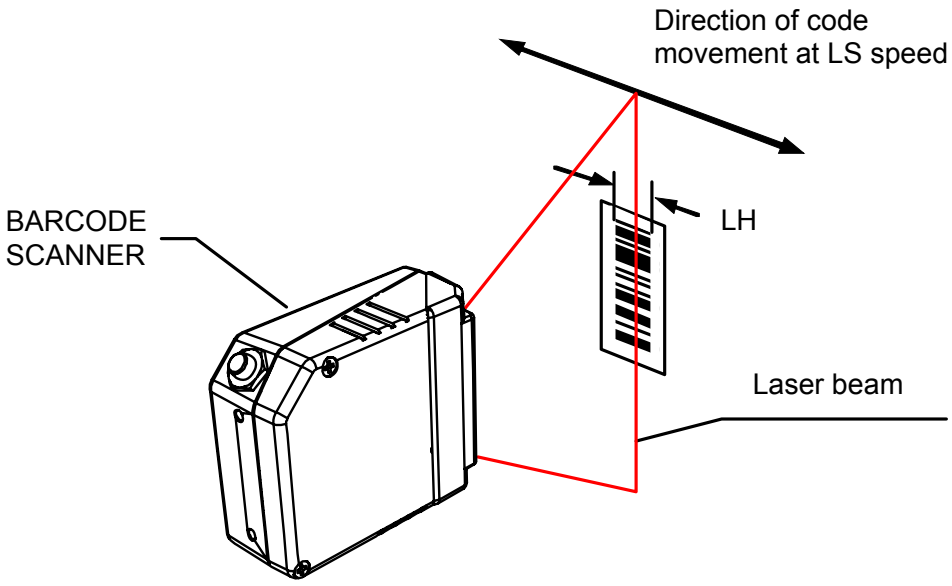

Figure 38. "Step-Ladder" Scanning Mode

For example:

TCNM-EX (800 scans/sec.) for a 25 mm high code moving at 1250 mm/s performs: [(25 ÷ 1250) × 800] – 2 = 14 effective scans
TCNM-AD (500 scans/sec.) for a 25 mm high code moving at 1000 mm/s performs: [(25 ÷ 1000) × 500] – 2 = 10 effective scans

9.2.2 Picket-Fence Mode

If scanning is parallel to the code motion, the number of effective scans is given by the following formula:

```
SN = [((FW - LW) ÷ LS) × SS] – 2
```

where:

SN = number of effective scans
FW = reading field width (in mm)
LW = label width (in mm)
LS = label movement speed (in mm/s)
SS = scans per second

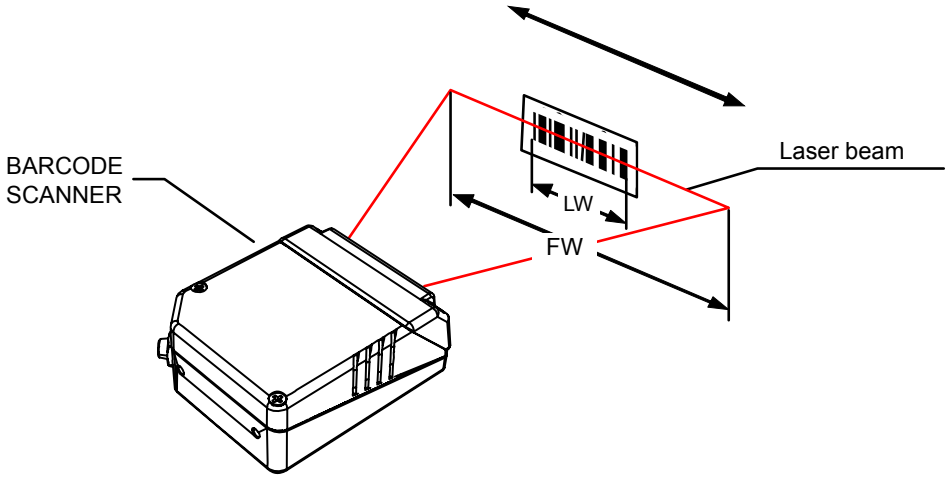

Figure 39. "Picket-Fence" Scanning Mode

For example:

TCNM-EX (800 scans per sec), for a 100 mm wide code moving in a point where the reading field is 200 mm wide at a 2000 mm/s speed, performs: [((200 – 100) ÷ 2000) × 800] – 2 = 38 effective scans
TCNM-AD (500 scans per sec.), for a 60 mm wide code moving in a point where the reading field is 160 mm wide at a 1500 mm/s speed, performs: [((160 – 60) ÷ 1500) × 500] – 2 = 31 effective scans

9.3 Performance

9.3.1 Reading Performance (TCNM-EX Models)

Version	Max Code Resolution (mm (mils))	Speed (scans/sec)
02X0	0.20 (8)	600 to 1000
12X0	0.25 (10)	600 to 1000
22X0	0.35 (14)	600 to 1000

Version	Reading Distance
02X0	75 mm (3 in) - 340 mm (13.4 in) on 0.35 mm (14 mils) codes
12X0	100 mm (3.9 in) - 440 mm (17.3 in) on 0.50 mm (20 mils) codes
22X0	190 mm (7.5 in) - 600 mm (23.6 in) on 0.50 mm (20 mils) codes

Refer to the diagrams given in *Reading Diagrams* on page 45 for further details on the reading features. They are taken on various resolution sample codes at a 25 °C ambient temperature, depending on the conditions in the notes under the diagrams.

9.3.2 Reading Performance (TCNM-AD Models)

Version	Max Code Resolution (mm (mils))	Speed (scans/sec)
12X0	0.20 (8)	500 to 800
12X4	0.15 (6)	800 to 1000
22X0	0.15 (6)	500 to 800
22X4	0.12 (5)	800 to 1000

Version	Reading Distance
12X0	40 mm (1.6 in) - 300 mm (11.8 in) on 0.50 mm (20 mils) codes
12X4	50 mm (1.8 in) - 310 mm (11.8 in) on 0.50 mm (20 mils) codes
22X0	30 mm (1.2 in) - 90 mm (3.5 in) on 0.30 mm (12 mils) codes
22X4	30 mm (1.2 in) - 90 mm (3.5 in) on 0.30 mm (12 mils) codes

Refer to the diagrams given in *Reading Diagrams* on page 45 for further details on the reading features. They are taken on various resolution sample codes at a 25 °C ambient temperature, depending on the conditions in the notes under the diagrams.

9.3.3 Raster

Raster versions are available. The distance between the top and bottom scan lines is called capture and is measured from the laser beam output window. The reading characteristics for the raster versions for the TCNM-EX Barcode Scanner are given in the table below:

	Reading Distance	
	300 mm (11.8 in)	600 mm (23.6 in)
Raster Capture	18 mm (0.7 in)	35 mm (1.4 in)

The maximum capture of the TCNM-AD Barcode Scanner is 18 mm (0.7 in) at 300 mm (11.8 in).

9.4 Reading Diagrams

9.4.1 Reading Diagrams (TCNM-EX Models)

TCNM-EX-0200 (Short Reading Range)	TCNM-EX-1200 (Medium Reading Range)

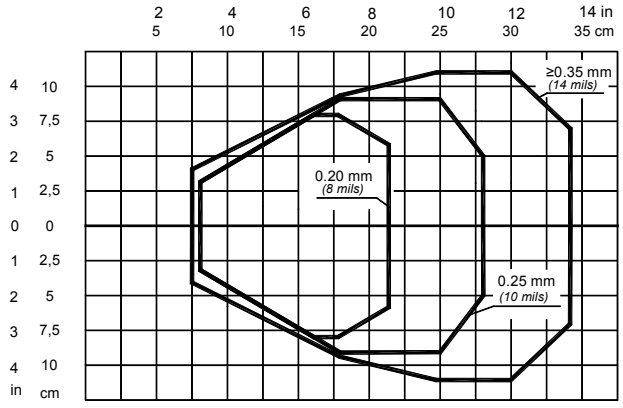

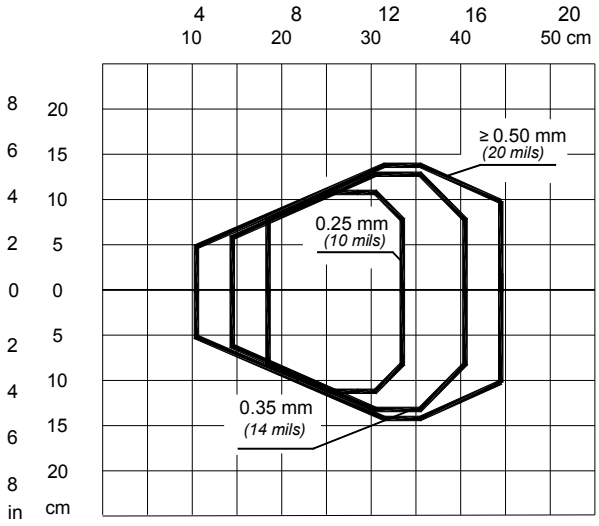

TCNM-EX-0200 (Short Reading Range)

Optic Version = Linear
Code = Interleaved 2/5 or Code 39
PCS = 0.90
Pitch angle = 0°
Skew angle = 10°
Tilt angle = 0°
Code Resolution[6] = High
Reading Conditions[6] = Standard
Scan Speed[6] = 800 scans/sec

TCNM-EX-1200 (Medium Reading Range)

Optic Version = Linear
Code = Interleaved 2/5 or Code 39
PCS = 0.90
Pitch angle = 0°
Skew angle = 10°
Tilt angle = 0°
Code Resolution[6] = High for 0.25 mm (10 mils) codes; Standard for 0.35 mm, (14 mils) codes and greater
Reading Conditions[6] = Standard
Scan Speed[6] = 800 scans/sec

TCNM-EX-2200 (Long Reading Range)

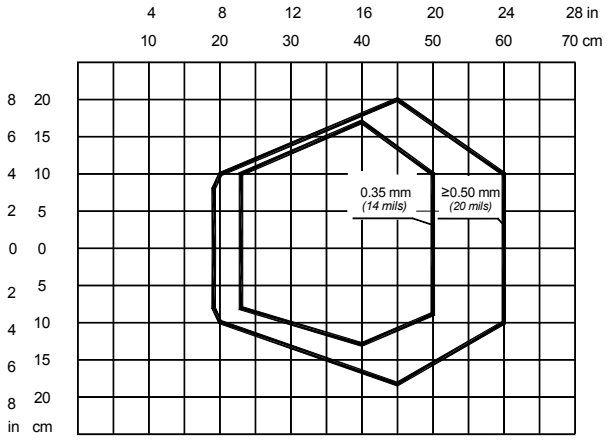

Optic Version = Linear
Code = Interleaved 2/5 or Code 39
PCS = 0.90
Pitch angle = 0°
Skew angle = 10°
Tilt angle = 0°
Code Resolution[6] = High for 0.35 mm (14 mils) codes; Standard for 0.50 mm, (20 mils) codes and greater
Reading Conditions[6] = Standard
Scan Speed[6] = 800 scans/sec

NOTE: (0,0) is the center of the laser beam output window.

[6] Parameters selectable in GeniusPlus.

9.4.2 Reading Diagrams (TCNM-AD Models)

TCNM-AD-1200 (Standard Resolution)

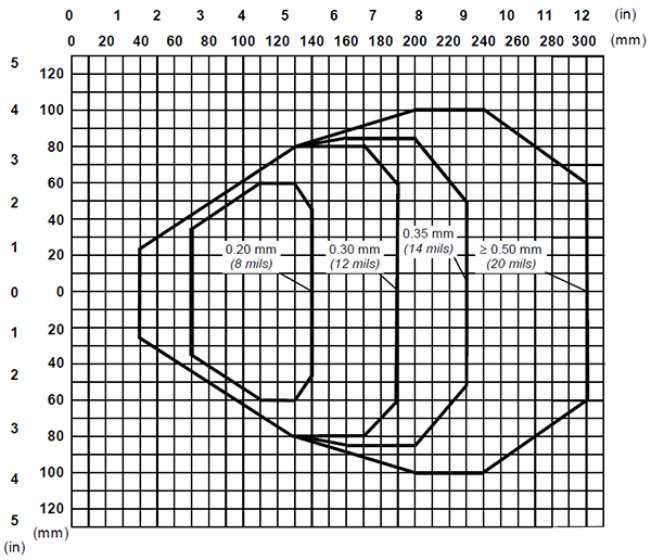

TCNM-AD-2200 (High Resolution)

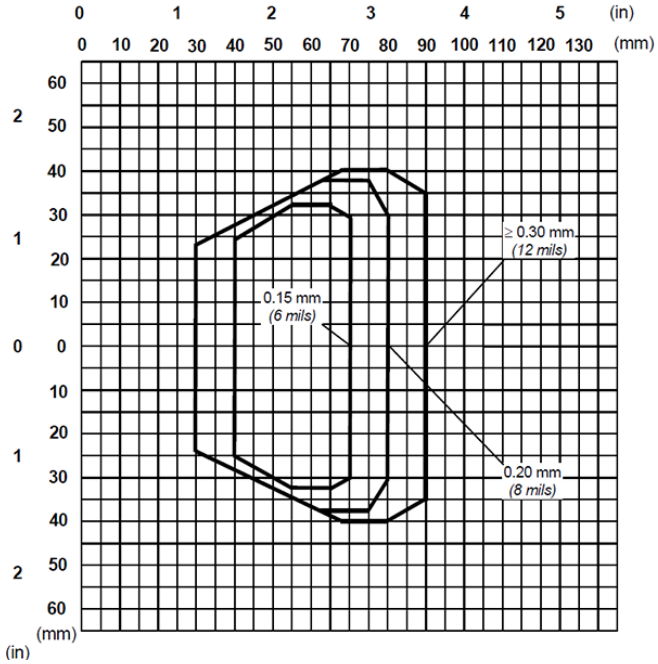

TCNM-AD-1204 (Standard Resolution)

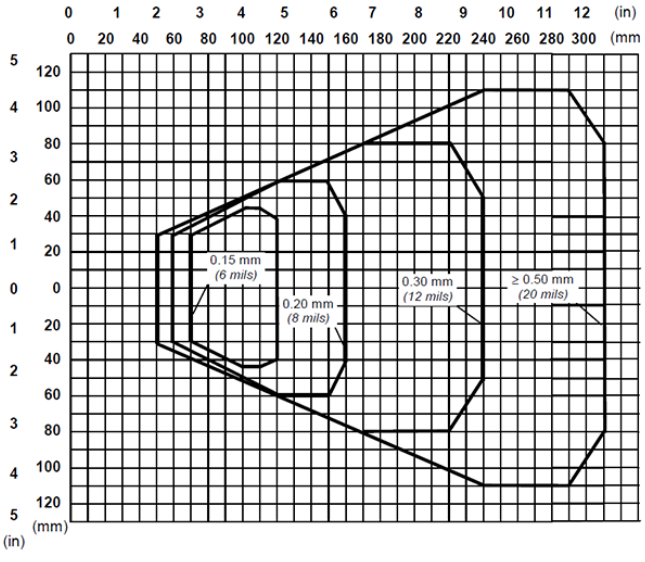

TCNM-AD-2204 (High Resolution)

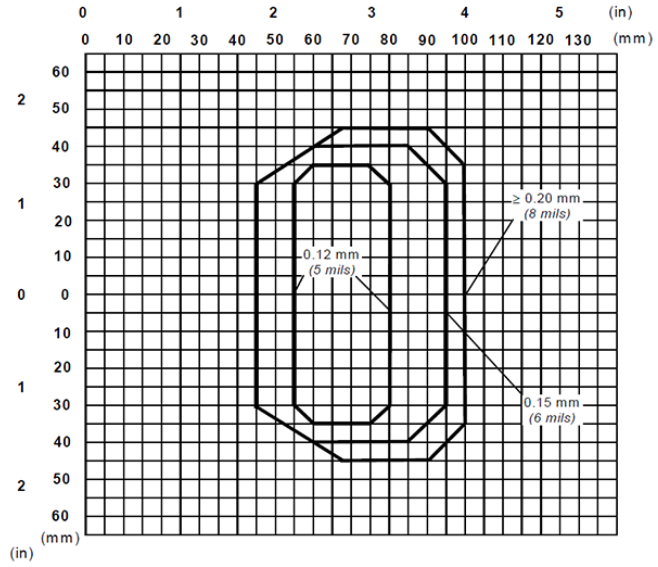

Note: (0,0) is the center of the laser beam output window.

Conditions

Optic Version = Linear
Code = Interleaved 2/5 or Code 39
PCS = 0.90
Pitch angle = 0°
Skew angle = 15°
Tilt angle = 0°
Reading Conditions[7] = Standard
Scan Speed [7] = 500 scans/sec

[7] Parameter selectable in GeniusPlus.

10 Maintenance

Dust, dirt, and debris on the window may alter the reading performance. Clean the laser beam output window periodically for continued correct operation of the reader; clean frequently in particularly dirty environments.



WARNING: Clean the window of the laser barcode scanner when the scanner is turned off or, at least, when the laser beam is deactivated.

To clean:

- Use soft material and alcohol to clean the window.
- Avoid any abrasive substances.

11 Troubleshooting

11.1 General Guidelines

When wiring the device, pay careful attention to the signal name (acronym) on the TCNM-ACBB1 spring clamp connectors. If you are connecting directly to the scanner's 25-pin connector, pay attention to the pin number of the signals.

If you need information about a certain reader parameter, refer to the GeniusPlus program help files. Either connect the device and select the parameter you are interested in by pressing the F1 key, or select Help > Parameters Help from the command menu.

If you are unable to fix the problem and need to contact Banner Engineering Corp, provide (if possible) the Device Configuration files (*.ddc). Connect through GeniusPlus and click the Save icon from the toolbar. Also note the device's model, serial number, and order number.

11.2 Troubleshooting Guide

Problem	Solution
Power On: the “Power On”/”Ready” LED is not lit	• Is power connected? • If using rail power, does the rail have power? • If using TCNM-ACBB1, does it have power (check the switch and LED)? • Measure voltage either at pin 13 and pin 25 (for 25-pin connector) or at spring clamp V dc and GND (for TCNM-ACBB1).
On Line Mode: TRIGGER LED is not lit (when external trigger activates)	• Is the sensor connected to I1A and I1B spring clamps (for TCNM-ACBB1) or to pins 18 and 19 (for 25-pin connector)? • Is power supplied to the sensor? • Are the sensor LEDS working correctly? • Is the sensor/reflector system aligned?
On Line Mode: TRIGGER LED is correctly lit but nothing happens (no reading results)	• Is the software configuration consistent with the application condition (operating mode, etc.)? • In the GeniusPlus program select the Operating Mode branch and check for related parameters.
Serial On Line Mode: the reader is not triggered (no reading results)	• In the GeniusPlus program select the Operating Mode branch and check if Serial On Line is selected in the On Line Options. • Are the Start – Stop characters correctly assigned? • Is the serial trigger source correctly connected and configured?
On Line Mode and Serial On Line: Reader doesn’t respond correctly to the expected external signals end	In the GeniusPlus program select the Operating Mode branch and check the Reading Phase Timeout parameter.
SMART-TEACH functions do not work. LEDs light up but do not allow access to the functions	The SMART-TEACH functions do not work if the scanner motor or laser are turned off. Check if the motor or laser are turned off through the following parameters: • Beam Shutter = enabled • Scan Speed = Motor Off • Energy Saving > Serial Motor Off has been sent
Reading: Not possible to read the target barcode (always returns No Read) or the Auto Setup procedure Fails	Check the synchronization of reading pulse with object to read: Is the scan line correctly positioned? Place the barcode in the center of the scan line and run Test mode (selectable by GeniusPlus as an Operating Mode). If you still have trouble, check the following: • Is the reading distance within the allowed distance (see reading diagrams)? • Is the Tilt angle too large? • Is the Skew angle less than 10° (direct reflection)? • Choose the Code Definition branch and enable different Code Symbologies (except Pharmacode). Length = Min and Max (variable). • Is the barcode quality sufficient? • If you had no success, perform the test using the BARCODE TEST CHART included with the product.

Problem	Solution
Communication: Device is not transmitting anything to the host	• Is the serial cable connected? • Is the correct wiring respected? • Are serial host settings equivalent to the serial device setting? • If using TCNM-ACBB1, make sure that the RS485 termination switch is positioned to OFF.
Communication: Data transferred to the host are incorrect, corrupted, or incomplete	• In the GeniusPlus program select the Data Communication Settings/Data Format/Standard Parameters branch and check the Header, Separators, and Terminator values • Check the Code Field Length and Fill Character values. • Are the COM port parameters correctly assigned?
Communication: Always returns the Reader Failure Character (<BEL> char as default)	Contact Banner Engineering Corp. Either a motor or laser failure has occurred. Note the exact model and serial number of the device.
Where is the serial number located?	The device's serial number is on a label on the body of the reader. Serial numbers consist of 9 characters: one letter, 2 numbers, and another letter followed by 5 numbers.

12 Specifications

Sensor

Input Power
Supply Voltage: 10–30V dc
Power consumption: Maximum 0.5 to 0.17 A; 5 W

Serial Interfaces
Main Serial Interface: Sw programmable: RS232; RS485 FD and HD
Baud rate: 1200 to 115200
Auxiliary: RS232
Baud rate: 1200 to 115200
ID-NET™: RS485 Half-duplex
Baud rate: Up to 1 MBaud

Inputs
Input 1 (External Trigger), Input 2: Optocoupled, polarity insensitive
Voltage: 10–30V dc
Current Consumption: 12 mA maximum
Minimum Pulse Duration: 5 ms

Outputs
Output 1, Output 2: Optocoupled
V_{CE}: 30V dc maximum
Collector Current: 40 mA continuous maximum; 130 mA pulsed maximum
$V_{CE\ saturation}$: 1V maximum at 10 mA
Power Dissipation: 80 mW maximum at 45 °C (ambient temperature)

Optical Features
Light Source: Semiconductor laser diode
Wave Length: 630 to 680 nm
Safety Class: Class 2 - EN 60825-1; CDRH

Reading Features[8]
Scan Rate (software): (600 to 1000 scans/sec)
Aperture Angle: 50°
Maximum Reading Distance and Resolution: see *Reading Performance (TCNM-EX Models)* on page 44 and *Reading Performance (TCNM-AD Models)* on page 44

Operating Conditions
Operating Temperature[9]: 0 °C to +45 °C (+32 °F to +113 °F)
Storage Temperature: −20 °C to +70 °C (−4 °F to +158 °F)
Humidity: 90% (non-condensing)
Vibration Resistance EN 60068-2-6: 14 mm at 2 to 10 Hz; 1.5 mm at 13 to 55 Hz; 2 g at 70 to 200 Hz; 2 hours on each axis
Bump Resistance N 60068-2-29: 30g; 6 ms; 5000 shocks on each axis

Environmental Rating
IP65
Protection Class – EN 60529

Dimensions
68 x 84 x 34 mm (2.7 x 3.3 x 1.3 in)

Weight
330 g (11.6 oz)

LED Indicators
Ready, Good, Trigger, Com, Status, Power On

Multi-function Key
SMART-TEACH button

Software

Readable Codes
EAN/UPC (including Add-on 2 and Add-on 5)[10]
2/5 Interleaved[10]
ABC Codabar
Codabar[10]
Code 39 (Standard and Full ASCII)[10]
Code 93[10]
Code 128[10]
EAN 128[10]
GS1 DataBar[10]
GS1 DataBar Expanded[10]
GS1 DataBar Limited
ISBT 128
Pharmacode
Plessey

Code Selection
Up to ten different symbologies during one reading phase

Decoding Safety
Can enable multiple good reads of same code

Headers and Terminators
Up to 128-byte header string
Up to 128-byte terminator string

Operating Modes
On Line, Serial On Line, Verifier, Automatic, Continuous, Test

Configuration Modes
SMART-TEACH Functions
GeniusPlus utility program
GeniusPlus based Host Mode Programming

Special Functions
Code Verifier
Advanced Code Reconstruction
Motor Off and SW_Speed Control
Programmable Diagnostic and Statistic Messages

Parameter Storage
Non-volatile internal Flash

[8] Further details given in the Reader Performance tables.
[9] If the reader is used in high temperature environments (over 40° C), use of the Beam Shutter is advised (see the GeniusPlus configuration program) and/or a thermally conductive support (such as the metal bracket provided).

[10] ACR Readable.

13 Accessories

Mirrors		
Name	Description	Part Number
TCNM-ACM-102R	102° Reading Mirror	90823
TCNM-ACM-OM110	Oscillating Mirror	90825
TCNM-ACM-000A		90822

Connection Boxes		
Name	Description	Part Number
TCNM-ACBB1	Compact Connection Box	90828

Cables		
Name	Description	Part Number
TCNM-AD-CAB	25-pin Cable, Flying Leads	90856

14 Glossary

A

ACR (Advanced Code Reconstruction)
: This powerful code reconstruction technology considerably increases the code reading capability in the case of damaged or very tilted barcodes.

Aperture
: Term used on the required CDRH warning labels to describe the laser exit window.

B

Barcode
: A pattern of variable-width bars and spaces that represents alphanumeric data in machine-readable form. The general format of a barcode symbol consists of a leading margin, start character, data or message character, check character (if any), stop character, and trailing margin. Within this framework, each recognizable symbology uses its own unique format.

Barcode Label
: A label that carries a barcode and can be affixed to an article.

Baud Rate
: A unit used to measure communications speed or data transfer rate.

C

CDRH (Center for Devices and Radiological Health)
: This organization (a service of the Food and Drug Administration) is responsible for the safety regulations governing acceptable limitations on electronic radiation from laser devices. Banner devices are in compliance with the CDRH regulations.

Code Positioning
: Variation in code placement that affects the ability of a scanner to read a code. The terms Pitch, Skew, and Tilt deal with the angular variations of code positioning in the X, Y and Z axes. Variations in code placement affect the pulse width and therefore the decoding of the code. Pulse width is defined as a change from the leading edge of a bar or space to the trailing edge of a bar or space over time. Pulse width is also referred to as a transition. Tilt, pitch, and skew affect the pulse width of the code.

D

Decode
: The process of translating a barcode into data characters using a specific set of rules for each symbology.

Decoder
: As part of a barcode reading system, the electronic package that receives the signals from the scanner, performs the algorithm to interpret the signals into meaningful data, and provides the interface to other devices. The decoder is normally integrated into the scanner.

E

EAN
: European Article Number System. The international standard barcode for retail food packages.

F

FLASH
: An on-board non-volatile memory chip.

Full Duplex
: Simultaneous, two-way, independent transmission in both directions.

H

Half Duplex
: Transmission in either direction, but not simultaneously.

Host
: A computer that serves other terminals in a network, providing services such as network control, database access, special programs, supervisory programs, or programming languages.

I

Interface
A shared boundary defined by common physical interconnection characteristics, signal characteristics and meanings of interchanged signals.

L

LED (Light Emitting Diode)
A low power electronic device that can serve as a visible or near infrared light source when voltage is applied continuously or in pulses. It is commonly used as an indicator light and uses less power than an incandescent light bulb but more than a Liquid Crystal Display (LCD). LEDs have extremely long lifetimes when properly operated.

M

Multidrop Line
A single communications circuit that interconnects many stations, each of which contains terminal devices. See RS485.

P

Parameter
A value you specify to a program. Typically parameters are set to configure a device to have particular operating characteristics.

Picket-Fence Orientation
When the barcode's bars are positioned vertically on the product, causing them to appear as a picket fence. The first bar will enter the scan window first.

Pitch
Rotation of a code pattern about the X-axis. The normal distance between center line or adjacent characters.

Position
The position of a scanner or light source in relation to the target of a receiving element.

Protocol
A formal set of conventions governing the formatting and relative timing of message exchange between two communicating systems.

R

Raster
The process of projecting the laser beam at varied angles spaced evenly from each other. Typically, the mirrored rotor surfaces are angled to create multiple scan lines instead of a single beam.

Resolution
The narrowest element dimension, which can be distinguished by a particular reading device or printed with a particular device or method.

RS232
Interface between data terminal equipment and data communication equipment employing serial binary data interchange.

RS485
Interface that specifies the electrical characteristics of generators and receivers for use in balanced digital multipoint systems such as on a Multidrop line.

S

Scanner
: A device that examines a printed pattern (barcode) and either passes the uninterpreted data to a decoder or decodes the data and passes it onto the Host system.

Serial Port
: An I/O port used to connect a scanner to your computer, identifiable by a 9-pin or 25-pin connector.

Signal
: An impulse or fluctuating electrical quantity (for example, a voltage or current) the variations of which represent changes in information.

Skew
: Rotation about the Y-axis. Rotational deviation from correct horizontal and vertical orientation; may apply to single character, line or entire encoded item.

Step-Ladder Orientation
: When the barcode's bars are positioned horizontally on the product, causing them to appear as a ladder. The ends of all bars will enter the scan window first.

Symbol
: A combination of characters including start/stop and checksum characters, as required, that form a complete scannable barcode.

T

Tilt
: Rotation around the Z axis. Used to describe the position of the barcode with respect to the laser scan line.

Trigger Signal
: A signal, typically provided by a photoelectric sensor or proximity switch, which informs the scanner of the presence of an object within its reading zone.

U

UPC
: Acronym for Universal Product Code. The standard barcode type for retail food packaging in the United States.

V

Visible Laser Diode
: A light source used in scanners to illuminate the barcode symbol. Generates visible red light at wavelengths between 630 and 680 nm.