Quick Start Guide for -PB2 Point-to-Point Networks

This Quick Start Guide describes how to replace discrete and analog signal wires using one Node and one Gateway when using the DX80G2M6S-PB2 Gateway's DIP switch-based mapping.



Node Model
DX80N2X6S-PB2

Gateway Model
DX80G2M6S-PB2

Step 1: Set the Gateway's DIP Switches

In the example network shown, the Node and Gateway are a mapped pair. To configure this I/O mapping, set the Gateway's DIP switch 2 and switch 8 ON. Refer to the Gateway's datasheet for other mapping options and the link loss settings.

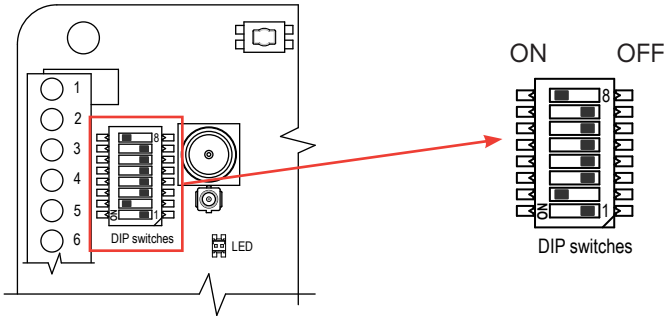

Step 2: Wire the Node and Gateway

Wire the power, discrete I/O, and analog I/O on the Node and Gateway according to the wiring diagram shown.

I/O Mapping

Node Inputs		Gateway Output
Analog IN 1	→	Analog OUT 1
Analog IN 2	→	Analog OUT 2
Discrete IN 1	→	Discrete OUT 1
Discrete IN 2	→	Discrete OUT 2

Gateway Inputs		Node Outputs
Analog IN 1	→	Analog OUT 1
Analog IN 2	→	Analog OUT 2
Discrete IN 1	→	Discrete OUT 1
Discrete IN 2	→	Discrete OUT 2

Node and Gateway Wiring

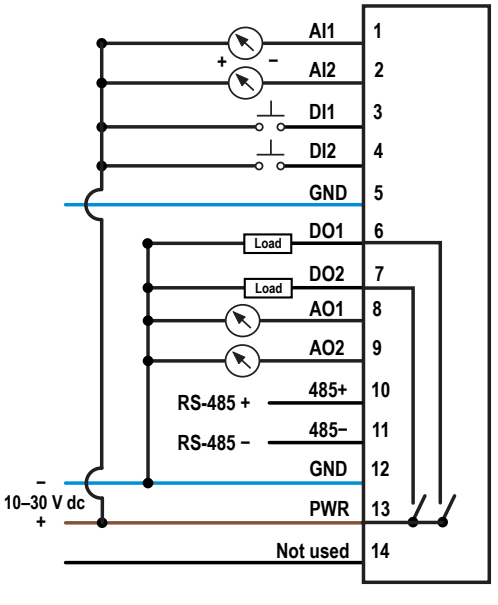

Printed in USA Nov 2020 P/N 164886 Rev. D

ПРОМЭЛЕКТРОНИКА/ sales@prom-elec.com

Step 3: Bind the Node to the Gateway

Binding Nodes to their Gateway ensures the Nodes only exchange data with the Gateway they are bound to. To create your network, bind the Nodes to the Gateway and assign them a unique Node address.

1. On the Gateway, enter binding mode by triple-clicking the button.
2. On the Node, use both rotary dials to assign the Node address. Set the left dial to 0 and the right dial to 1.

   After the Node is bound, the LED flashes four times. The Node automatically exits binding mode.
3. On the Node, enter binding mode by triple-clicking the button.
4. On the Gateway, single-click button the button to exit binding mode.

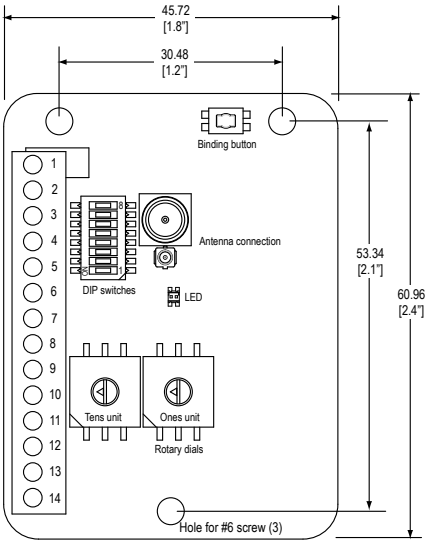

Step 4: Verify Radio Communication

To verify the Gateway and Nodes are communicating:

- Gateway's LED 1 is solid green.
- Until communication is established with the Gateway, the Node's red LED flashes.
- After communication is established, the Node's green LED flashes.

Step 5: Conduct a Site Survey

To test the radio signal strength between the Gateway and the Node, conduct a site survey.

1. On the Gateway, set the rotary dials to 00 to first turn the site survey off.
2. On the Gateway, set the rotary dials to the Node's address. In this example, set the rotary dials to 01.
3. The Gateway's amber LED blinks to indicate the signal strength.

   The LED blinks faster to indicate a stronger signal. For the definition of the blink speed and how it corresponds to the signal strength, refer to the -PB2 Gateway datasheet (p/n 163211).
4. To end the site survey, change the Gateway's rotary dials back to 00.
5. If there is no radio signal between the Gateway and Node, the LED turns a solid amber.

Banner Engineering Corp. • Minneapolis, MN U.S.A
www.bannerengineering.com • Tel: 763.544.3164