MINI-ARRAY Heated Enclosure

Datasheet

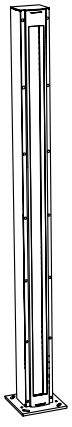

- Heavy-duty stainless steel or extruded aluminum housing protects emitter or receiver in an outdoor environment
- Thermostatically controlled resistance wires keep glass window free of condensation, snow or ice for effective sensor operation in cold weather environments
- Humidistat also controls heated window to keep glass clear, even on damp or foggy days
- Choose from stainless steel or aluminum housings, in 3 sizes
- Compatible with 4 ft, 5 ft, and 6 ft MINI-ARRAY sensors
- Space-saving, vertical design requires only 8 in × 8 in footprint
- An excellent solution for outdoor applications such as toll booths

Models

Models	Enclosure Material	Finish [1]	Array Length (ft)	Overall Enclosure Height (H)	Clear Window Height (C)
BMHE4A/BMHL4G	Aluminum	Painted	4	1.7 m (66.5 in)	1.5 m (59)
BMHE5A/BMHL5G			5	2 m (78.5 in)	1.8 m (71 in)
BMHE6A/BMHL6G			6	2.2 m (86.5 in)	2 m (79 in)
BMHE4SS/BMHL4GSS	Stainless steel		4	1.7 m (67.5 in)	1.5 m (59)
BMHE5SS/BMHL5GSS			5	2 m (79.5 in)	1.8 m (72 in)
BMHE6SS/BMHL6GSS			6	2.2 m (87.5 in)	2 m (80 in)
BMHE4SSN/BMHL4GSSN		Not painted	4	1.7 m (67.5 in)	1.5 m (59)
BMHE5SSN/BMHL5GSSN			5	2 m (79.5 in)	1.8 m (72 in)
BMHE6SSN/BMHL6GSSN			6	2.2 m (87.5 in)	2 m (80 in)

Overview

The Series BMHE Heated Enclosure is designed to offer weather protection for a MINI-ARRAY emitter or receiver in an outdoor application such as a toll booth.

The Enclosure has a laminated safety glass window with a series of resistance wires. The resistance wires connect through two thermostats to a power source to heat the glass as necessary to prevent condensation, ice or snow from inhibiting the beams. When humidity inside the enclosure rises, a humidistat prompts the heater to warm the window, to prevent condensation.

The Series BMHE MINI-ARRAY Heated Enclosure is designed to accommodate MINI-ARRAY emitters and receivers 4 ft, 5 ft, or 6 ft long, with enough extra space at top and bottom to ensure accurate mounting.

[1] Standard color is Federal Safety Yellow (Federal Standard color# 23538). Consult Factory for other colors.

Original Document
55557 Rev. B

15 July 2022

55557

ПРОМЭЛЕКТРОНИКА/ sales@prom-elec.com

Installation Instructions

Components

Figure 1. Exploded view of the assembly

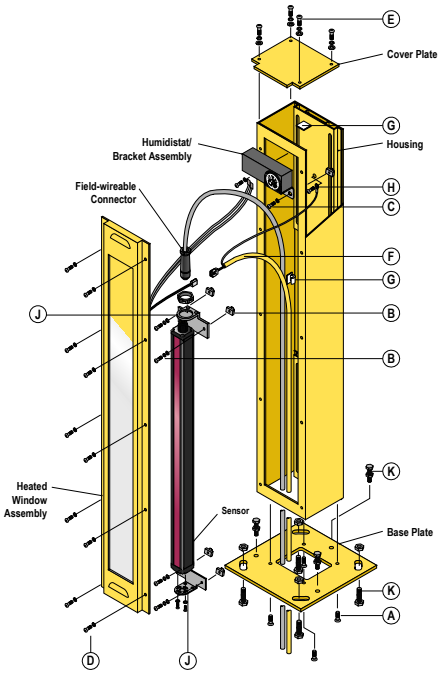

Table 1: Banner-supplied stainless steel hardware

Item	Use	Description	Packet No.	Stainless Steel Enclosure Qty	Aluminum Enclosure Qty
A	Mount the base plate to the enclosure	1/4-20 x .75" Phillips flat head screw	3	4	4
B	Mount the sensor and humidistat brackets	10-32 x .50" socket head cap screw	3	6	6
		Split ring lock washer, #10	3	6	6
		Flat washer, #10	3	6	6
		10-32 spring nut*	4	6	6
C	Grounding screw	Phillips pan head machine screw	4	1	1
		ITLW washer, #10	4	1	1
D	Mount the window assembly to the enclosure	8-32 x 0.38" Phillips pan head machine screw	4	16	-
		8-32 x 0.50" Phillips pan head machine screw	1	-	12
		Lock washer, ITLW, #8	1	16	12
E	Mount the cover plate to the enclosure	8-32 x .38" Phillips pan head machine screw	2	4	4
		Split ring lock washer, #8	2	4	4
		Flat washer, #8	2	4	4

* All fasteners are stainless steel, except for the zinc-plated steel spring nuts.

Table 2: Additional hardware included with the heated enclosure

Item	Use	Description	Stainless Steel Enclosure Qty	Aluminum Enclosure Qty
F	Connect power to the heater cable	Male connector pins	2	2
		2-pin connector	1	1
G	Fasten power cable	Cable holder clip (3/4 x 3/4)	2	2
H	Ground power cable	Ring terminal	1	1
J	Mount sensors	Sensor brackets (packed with heated enclosure)	2	2
		Humidistat/bracket assembly	1	1

Table 3: User-supplied hardware

Item	Use	Description	Stainless Steel Enclosure Qty	Aluminum Enclosure Qty
K	Mount and level the base	3/8" - 24 leveling bolts (2" recommended)	3	3
		3/8" - 24 lock nuts	3	3
		3/8" Mounting studs	4	4
		3/8" Mounting nuts	4	4

Assemble the Heated Enclosure

Follow these instructions to assemble the heated enclosure.

Figure 2. Level the heated enclosure

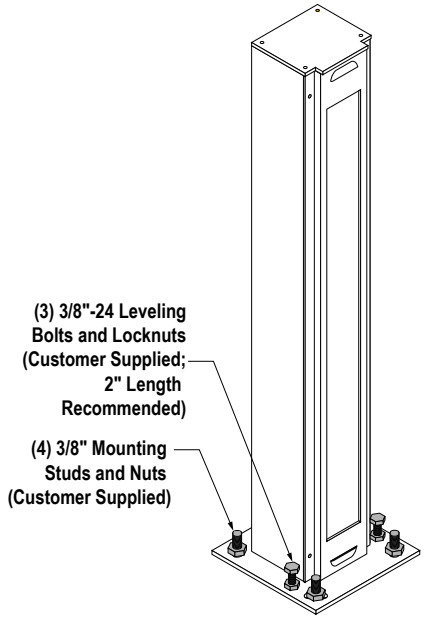

1. Prepare a 6 in × 6 in square mounting pad, using four 3/8" studs (not included).
2. Mount the base plate to the housing with four stainless steel flat head screws (1/4" - 20 x 3/4", included).
3. Feed the heater cable and the sensor cable through the cutout in the base plate; set the housing/base plate assembly onto the mounting pad.
4. Level the housing in one of two ways:
   - Use three user-supplied 3/8" - 24 x 2" bolts and lock nuts; or
   - Use four leveling nuts, threaded onto the four mounting studs, under the base plate. After leveling, secure the housing assembly using four 3/8" nuts on the four mounting studs. Add flat washers and lock washers, as required (not included).

Wire the Enclosure

Follow these instructions to make the electrical connections.

1. Connect the heater supply cable. The heated window is powered at the top of the enclosure.

   Transformer Power Supplies convert 115 V AC to the voltage required by the heated window and humidistat.

Figure 3. Assembly of the Molex conector

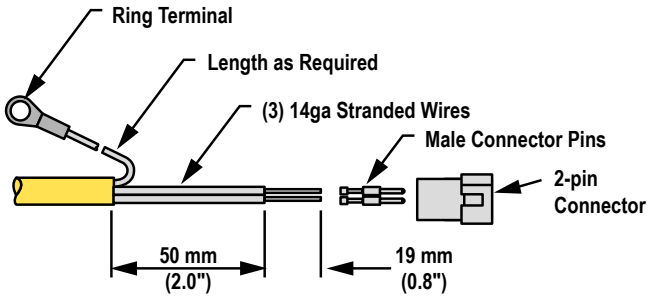

a) Route the heater supply cable to the top of the enclosure along one side wall.
b) Cut off any excess cable, leaving enough to make the connections.
c) Secure the cable midway along the sidewall, using one of the supplied cable clips.
d) Strip the heater supply cable insulation as shown.
e) Install the ring terminal on the ground wire.
f) Install the male connector pins on the two power wires, using Molex crimping tool model HTR01031E, or equivalent.
g) Push the power wires into the two male connector pins, and crimp.
h) Insert the pins into the Molex 2-pin connector. Attach the ring terminal to the hole at the upper back of the enclosure, using the supplied #10 hardware.

2. Connect the humidistat supply cable.
   a) Insert six spring nuts into the rear slots in the back of the enclosure, three on each side. (Two nuts will be for attaching the humidistat bracket, and four will be for attaching the sensor brackets, at top and bottom.)
   b) Mount the humidistat/bracket assembly to the upper back of the enclosure.
   c) Push the two wires with blade terminals into place on the humidistat wiring harness; push firmly until they “click” into place. (Connect either wire to either terminal; polarity is not important.)
3. Connect the sensor cable.

Figure 4. MINI-ARRAY sensor cable wiring to the field-wireable connector

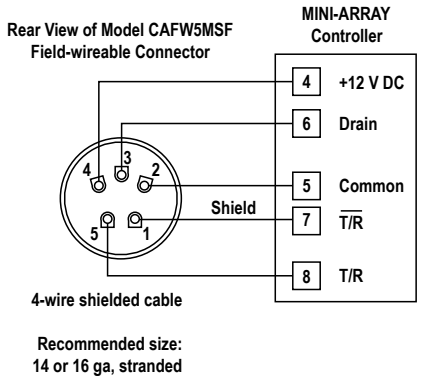

a) Route the sensor cable terminal to the top of the enclosure, leaving enough to bend it at the top and plug it into the sensor. If you are supplying non-Banner cables and using the field-wireable connector, go to the next sub-step.
b) To install the field-wireable connector, follow the wiring connections as shown. Allow enough space at the top of the Heated Enclosure when mounting the sensors to accommodate this connector’s additional length (as compared with the standard Banner QD cable).

The connector pins accept up to 14 gauge stranded wire; 16 gauge stranded wire is recommended for the sensor cable wires.

Mount and Align the Sensor

Follow these instructions to mount and align the sensor.

Note:
- **Heat and Burn Warning**
- The glass and window frame are hot; a burn may result.
- Do not touch the glass or window frame when the heating element is on.

1. Assemble the brackets supplied with the Heated Enclosure to each end of the sensor, using 2 hex head screws with integral compression washer per bracket (M4 x 10 – non QD end; M30 Nut and washer – QD end, supplied with sensors).

   (Although both screws and brackets are supplied with each MINI-ARRAY sensor, use only the brackets packed with the Heated Enclosure.)
2. Adjust the location of the spring nuts in the rear slots to align with the holes in the sensor mounting brackets and install the sensor using the supplied #10 hardware.
3. Adjust the height of the sensor to match the height of the opposing sensor; ensure that the sensor lens is oriented parallel to the enclosure window.
4. Connect the sensor cable to the sensor’s QD connector. See the instructions packed with each sensor for connecting the sensor cable to the array controller.
5. After all sensor wiring is completed, follow the instructions packed with the sensor controller for optimizing alignment. Rotate the enclosure as needed to align the emitter and receiver arrays.

Final Assembly Instructions

1. Attach the second cable clip to the inside of the cover plate. See Figure 1 on page 2.

2. Assemble the cover plate to the housing using the supplied #8 hardware.
3. Attach the heater supply cable to the cable clip on the cover plate.
4. Connect the heater supply cable to the heated window assembly.
5. Mount the heated window assembly to the enclosure using the supplied #8 hardware.
6. Connect the heater power cable to the cable from the Transformer Power Supply (see instructions packed with Power Supply).

   The red LED at the top of the heated window assembly indicates when the heater element is active.

Operating the Heated Enclosure

The humidistat is adjustable between 20% and 80% relative humidity. The factory setting is 80% relative humidity, which is the optimal setting for most applications.

- To eliminate the humidistat from the window control circuit, turn the knob fully counter-clockwise to the OFF position.
- To manually close the contacts on the humidistat, turn the knob fully clockwise to the ON position.

For accurate operation, do not attempt to adjust the humidistat below 20% or above 80% relative humidity.

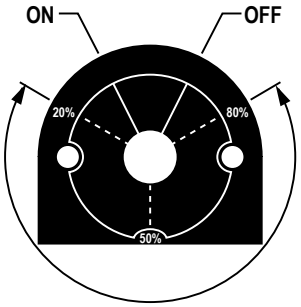

For accurate operation, do not set humidistat below 20% or above 80%

Specifications

Heated Power Requirement
BMHE4 Models: 4 amps at 24 V AC
BMHE5 Models: 4 amps at 28 V AC
BMHE6 Models: 4 amps at 36 V AC

Control Thermostat
Encapsulated disc-type
Closing Temperature: 4 °C (39 °F)
Open Temperature: 29 °C (84 °F)

Back-up Thermostat
Encapsulated disc-type
Closing Temperature: 32 °C (90 °F)
Open Temperature: 49 °C (120 °F)

Humidistat
Mechanical switch activated by hygroscopic nylon film
Humidity Range: 20% to 80% relative humidity

Status Indicator
Front-mounted red LED indicates when heater element is ON

Temperature Range
–20 °C to +70 °C (–4 °F to +158 °F)

Construction
Housing: 6063 T6 aluminum, extruded; or 304 stainless steel, formed
Window: Laminated safety glass with embedded resistance wires

Environmental Rating
NEMA 3R (IEC IP54)

Connections
Sensors: MINI-ARRAY emitters and receivers have 5-pin Ministyle connectors; use Banner 5-wire cables or user-supplied 5-wire shielded cable with optional field-wireable connector; see sensor data sheet for further details. For other sensor models, see individual sensor data sheet for connection specifications.
Heater: (Cable not supplied) Requires 2-wire 14 gauge stranded cable, with ground wire. Loop resistance < 0.75 ohms (up to 45 m / 150 ft of 14 gauge cable) Connectors accept up to 14 gauge stranded wire.
Humidistat: Blade connectors on the humidistat housing connect to the wire receptacles on the heated window wiring harness

Figure 5. Dimensions

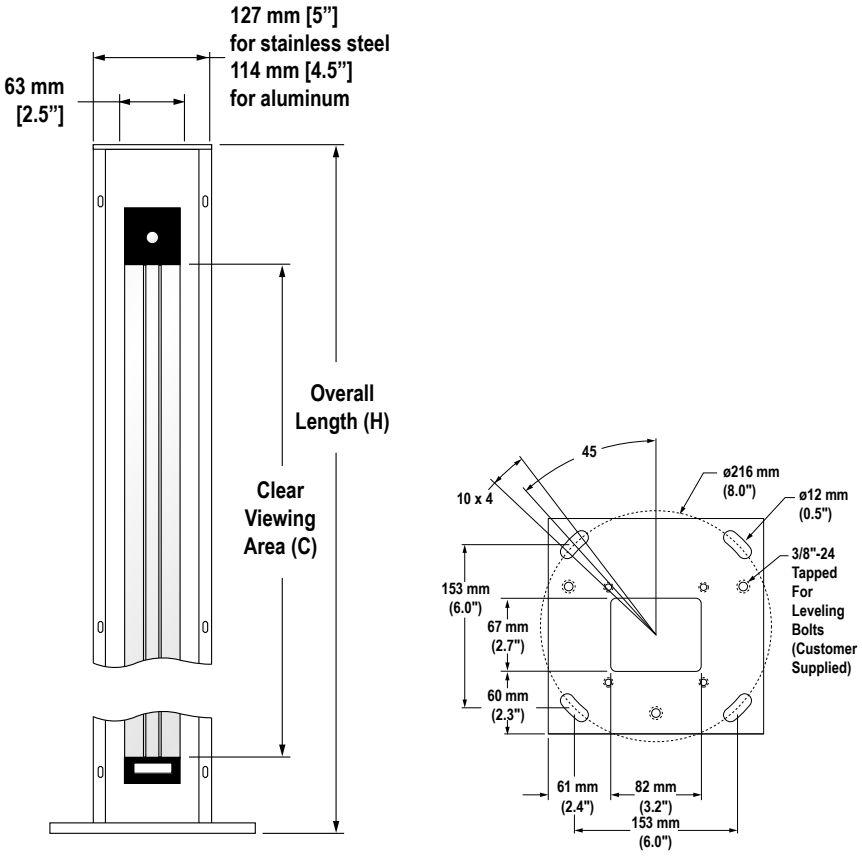

Accessories

Power Supply Models	Description	Primary	Secondary
BMHPS4	Power supply for two BMHE4 enclosures	105 to 130 V AC	23 V AC
BMHPS5	Power supply for two BMHE5 enclosures	105 to 130 V AC	27 V AC
BMHPS6	Power supply for two BMHE6 enclosures	105 to 130 V AC	35 V AC

5-Pin 7/8-in Cordsets with Shield and “Twisted Pair”—Single Ended

Model	Length	Style	Dimensions	Pinout (Female)
QDC-515C	4.57 m (15 ft)	Straight	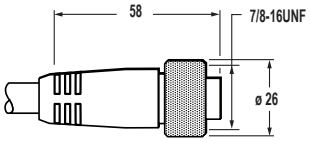	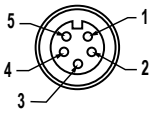
QDC-525C	7.62 m (25 ft)			
QDC-550C	15.2 m (50 ft)			
MAQDC-575C	22.9 m (75 ft)			
MAQDC-5100C	30.5 m (100 ft)			
MAQDC-5125C	38.1 m (125 ft)			
MAQDC-5150C	45.7 m (150 ft)			

1 = Black
2 = Blue
3 = Drain
4 = Brown
5 = White

MINI-ARRAY Field-wireable Connectors for User-supplied Cable

Model	To Fit Cable Dia	Termination	Dimensions
CAFW5MSF1	6–8 mm	5-pin 7/8 in-16UNF Female	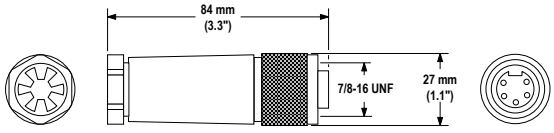
CAFW5MSF3	10–12 mm		
CAFW5MSF4	12–14 mm		

Replacement Heated Window Models	Material	Finish	Array Length (ft)	
BMHL4G	Aluminum Window Assembly	Painted (Yellow)	4	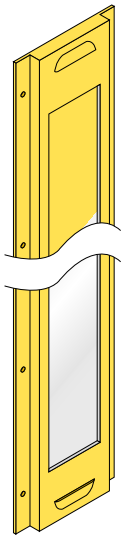
BMHL5G			5	
BMHL6G			6	
BMHL4GSS	Stainless Steel Window Assembly		4	
BMHL5GSS			5	
BMHL6GSS			6	
BMHL4GSSN		Not painted	4	
BMHL5GSSN			5	
BMHL6GSSN			6	

Banner Engineering Corp Limited Warranty

Banner Engineering Corp. warrants its products to be free from defects in material and workmanship for one year following the date of shipment. Banner Engineering Corp. will repair or replace, free of charge, any product of its manufacture which, at the time it is returned to the factory, is found to have been defective during the warranty period. This warranty does not cover damage or liability for misuse, abuse, or the improper application or installation of the Banner product.

THIS LIMITED WARRANTY IS EXCLUSIVE AND IN LIEU OF ALL OTHER WARRANTIES WHETHER EXPRESS OR IMPLIED (INCLUDING, WITHOUT LIMITATION, ANY WARRANTY OF MERCHANTABILITY OR FITNESS FOR A PARTICULAR PURPOSE), AND WHETHER ARISING UNDER COURSE OF PERFORMANCE, COURSE OF DEALING OR TRADE USAGE.

This Warranty is exclusive and limited to repair or, at the discretion of Banner Engineering Corp., replacement. **IN NO EVENT SHALL BANNER ENGINEERING CORP. BE LIABLE TO BUYER OR ANY OTHER PERSON OR ENTITY FOR ANY EXTRA COSTS, EXPENSES, LOSSES, LOSS OF PROFITS, OR ANY INCIDENTAL, CONSEQUENTIAL OR SPECIAL DAMAGES RESULTING FROM ANY PRODUCT DEFECT OR FROM THE USE OR INABILITY TO USE THE PRODUCT, WHETHER ARISING IN CONTRACT OR WARRANTY, STATUTE, TORT, STRICT LIABILITY, NEGLIGENCE, OR OTHERWISE.**

Banner Engineering Corp. reserves the right to change, modify or improve the design of the product without assuming any obligations or liabilities relating to any product previously manufactured by Banner Engineering Corp. Any misuse, abuse, or improper application or installation of this product or use of the product for personal protection applications when the product is identified as not intended for such purposes will void the product warranty. Any modifications to this product without prior express approval by Banner Engineering Corp will void the product warranties. All specifications published in this document are subject to change; Banner reserves the right to modify product specifications or update documentation at any time. Specifications and product information in English supersede that which is provided in any other language. For the most recent version of any documentation, refer to: www.bannerengineering.com.

For patent information, see www.bannerengineering.com/patents.

© Banner Engineering Corp. All rights reserved