EZ-SCREEN® Type 2 Heavy Duty V-Series Light Screen

Supplement to Instruction Manual (p/n 122452)

This supplemental document describes the EZ-SCREEN Type 2 Heavy Duty V-Series Light Screen (EZ-SCREEN Type 2 HD V-Series) applications and limitations, models, names, alignment aids, replacement parts, literature, mounting brackets, dimensions, and mounting instructions. It is to be used in conjunction with the standard EZ-SCREEN Type 2 Light Screen manual.

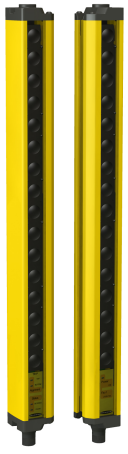

- An optoelectronic safeguarding device in a compact, rugged package for heavy-duty machines
- Two-piece design
- Choose from 12 sizes, in 150 mm (6 in) increments: defined areas from 150 mm to 1.8 m (6 in. to 71 in)
- Models available with Trip output operation (automatic start/restart)
- 30 mm (1.18 in) resolution
- Remote Test input terminals for simulating a "blocked" condition
- Operating range up to 4 m (13 ft)
- Type 2 per IEC 61496-1/-2; Category 2 PLc per EN ISO 13849-1
- FMEA tested according to IEC 61496-1, Type 2 requirements
- Receiver LEDs provide system status and emitter/receiver alignment indications
- Highly immune to EMI, RFI, ambient light, weld flash, and strobe light
- Vibration-tolerant, factory burned-in emitter and receiver circuitry for toughness and dependability

Applications and Limitations

The Banner EZ-SCREEN Type 2 HD V-Series sensors are intended for lower-risk machine guarding applications and other safeguarding applications, as determined by a risk assessment. The user is responsible to verify whether the safeguarding is appropriate for the application and is installed, as instructed by the EZ-SCREEN Type 2 Light Screen Instruction Manual (p/n 122452), by a Qualified Person (as defined in the Glossary of that manual).

Before installing the EZ-SCREEN Type 2 HD V-Series, read the EZ-SCREEN Type 2 Light Screen Instruction Manual in its entirety. The System's ability to perform its safeguarding function depends upon the appropriateness of the application and upon its proper mechanical and electrical installation, and interfacing to the guarded machine. If all mounting, installation, interfacing, and checkout procedures are not followed properly, the System cannot provide the protection for which it was designed.

EZ-SCREEN Type 2 HD V-Series sensors are typically used, but are not limited to, the following applications (dependent on machine risk assessment):

- Punch presses
- Assembly equipment
- Automated production equipment
- Equipment and process protection (non-personnel safety)
- Applications that could result in only minor (normally reversible) injuries (such as a bump, knock-down, trapping but not crushing, minor cuts, abrasions, etc.)

Original Document
179425 Rev. B

23 May 2014

179425

ПРОМЭЛЕКТРОНИКА/ sales@prom-elec.com

Dimensions

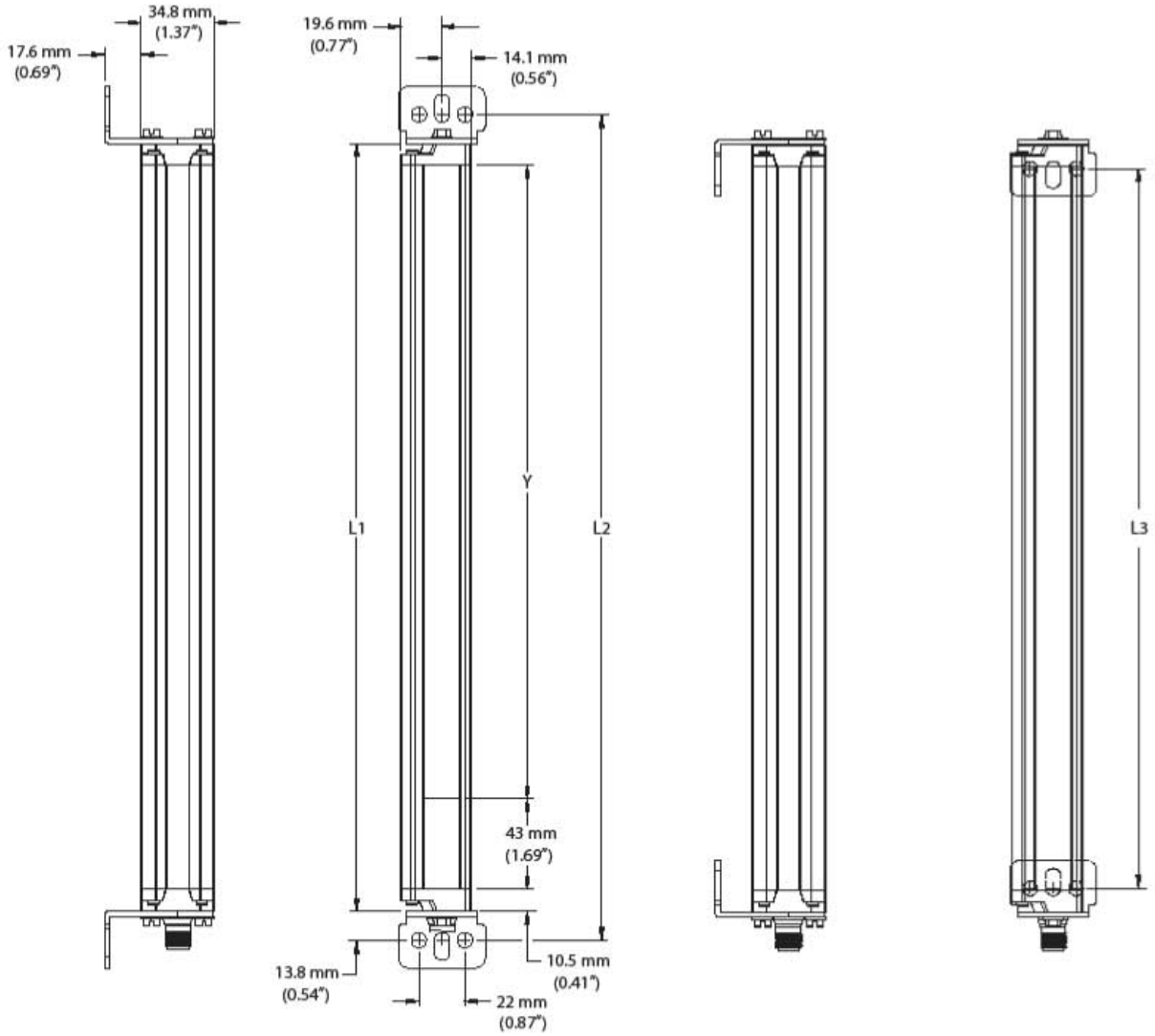

Emitter or Receiver Model	Housing Length	Distance Between Bracket Holes		Defined Area
	L1	L2	L3	Y
LS2HDVA..150	216 mm (8.5 in)	243.6 mm (9.6 in)	193 mm (7.6 in)	150 mm (5.9 in)
LS2HDVA..300	366 mm (14.4 in)	393.6 mm (15.5 in)	343 mm (14.5 in)	300 mm (11.8)
LS2HDVA..450	516 mm (20.3 in)	543.6 mm (21.4 in)	493 mm (19.4 in)	450 mm (17.7 in)
LS2HDVA..600	666 mm (26.2 in)	693.6 mm (27.3 in)	643 mm (25.3 in)	600 mm (23.6 in)
LS2HDVA..750	816 mm (32.1 in)	843.6 mm (33.2 in)	793 mm (31.2 in)	750 mm (29.5 in)
LS2HDVA..900	965 mm (38.0 in)	992.6 mm (39.1 in)	942 mm (37.1 in)	900 mm (35.4 in)
LS2HDVA..1050	1115 mm (43.9 in)	1142.6 mm (45.0 in)	1092 mm (43.0 in)	1050 mm (41.3 in)
LS2HDVA..1200	1265 mm (49.8 in)	1292.6 mm (50.9 in)	1242 mm (48.9 in)	1200 mm (47.2 in)
LS2HDVA..1350	1415 mm (55.7 in)	1442.6 mm (56.8 in)	1392 mm (54.8 in)	1350 mm (53.1 in)
LS2HDVA..1500	1564 mm (61.6 in)	1591.6 mm (62.7 in)	1541 mm (60.7 in)	1500 mm (59.1 in)
LS2HDVA..1650	1714 mm (67.5 in)	1741.6 mm (68.6 in)	1691 mm (66.6 in)	1650 mm (65.0 in)
LS2HDVA..1800	1864 mm (73.4 in)	1891.6 mm (74.5 in)	1841 mm (72.5 in)	1800 mm (70.9 in)

Figure 1. Mounting Dimensions

Mounting Brackets

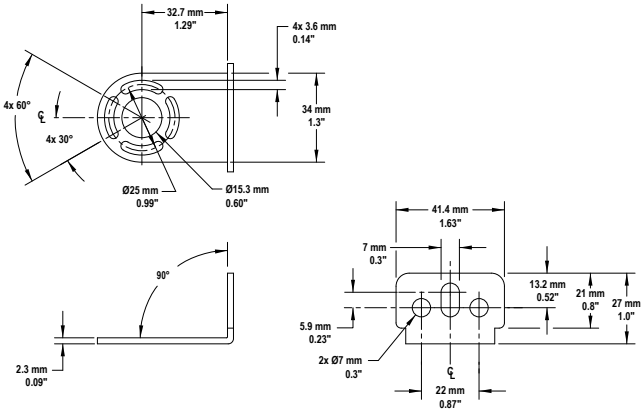

Figure 2. Standard End Cap Bracket LSHDMB-1. Supplied Qty: 2

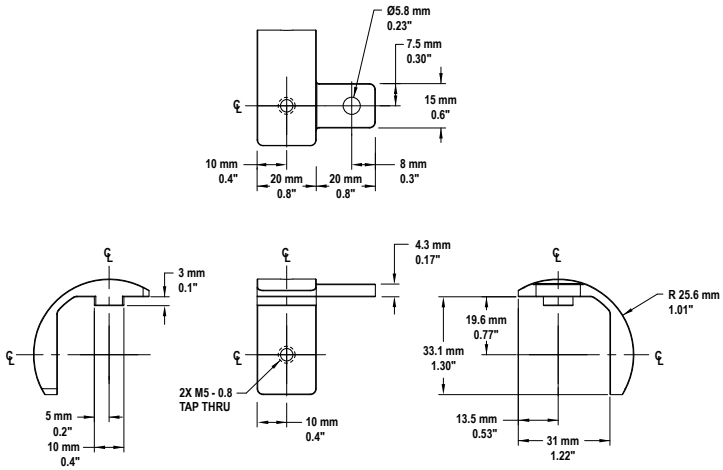

Figure 3. Standard Center Bracket LSHDCMB-1, for sensors 750-1050 mm long. Supplied Qty: 1

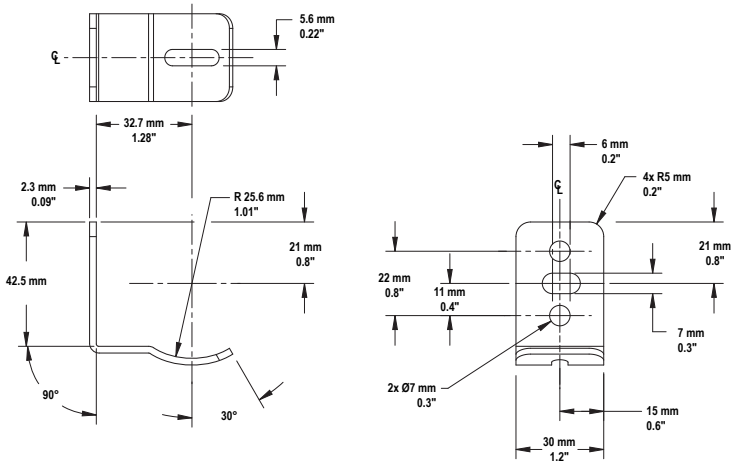

Figure 4. Standard Center Bracket LSHDCMB-2, for sensors 1200-1800 mm long. Supplied Qty: 2

Mounting

Sensors are designed to be mounted with up to 600 mm unsupported distance between brackets (see the EZ-SCREEN Type 2 Instruction Manual and *Figure 5* on page 4).

Supplied brackets for each emitter or receiver:

Sensor Length	Brackets
150 mm - 600 mm	2 End Brackets
750 mm - 1050 mm	2 End Brackets + 1 Center Bracket
1200 mm - 1800 mm	2 End Brackets + 2 Center Brackets

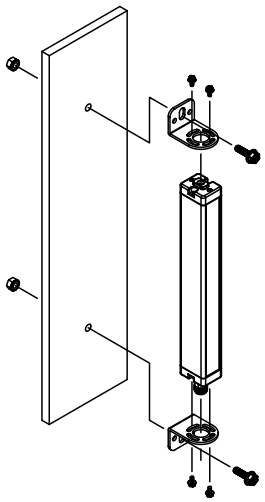

Figure 5. EZ-SCREEN Type 2 HD V-Series Standard End Cap

NOTE: Brackets are designed to mount directly to MSA-series stands using the hardware supplied with the stands.

Center Mounting Brackets must be used with the longer sensors whenever the sensors are subjects to shock or vibration. In such situations the sensors are designed to be mounted with up to 600 mm (23.6 in) distance between brackets. Sensors 750 mm (29.5 in) to 1050 mm (41.3 in) long are supplied with one center bracket, which needs to be centered on the sensor. Longer sensors are supplied with two center mounting brackets, which need to be positioned 1/3 of the sensor's length from each sensor end (see *Figure 6* on page 4).

1. Place the T-nut in the side slot of the sensor housing.
2. Fasten the cylindrical inner bracket to the T-nut using the M5-0.8x10 screw provided.
3. Fasten the curved outer mounting bracket to the inner bracket using M5-0.8x10 screw provided.
4. Loosen all the mounting bracket screws to the sensor.
5. Align the sensors.
6. Tighten the end screws.
7. Tighten the M5 screws of the center mounting bracket parts.

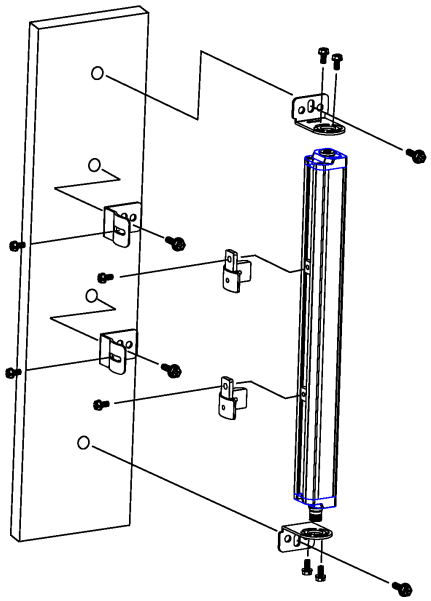

Figure 6. EZ-SCREEN Type 2 HD V-Series Center Bracket

Models

Model	Sensor Type	Defined Area Height	Number of Beams	Response Time (Tr)
LS2HDVAE30-150Q8	Emitter	150 mm (5.9 in)	8	11 ms
LS2HDVAR30-150Q8	Receiver			
LS2HDVAP30-150Q88	Pair			
LS2HDVAE30-300Q8	Emitter	300 mm (11.8 in)	16	13 ms
LS2HDVAR30-300Q8	Receiver			
LS2HDVAP30-300Q88	Pair			
LS2HDVAE30-450Q8	Emitter	450 mm (17.7 in)	24	14 ms
LS2HDVAR30-450Q8	Receiver			
LS2HDVAP30-450Q88	Pair			
LS2HDVAE30-600Q8	Emitter	600 mm (23.6 in)	32	16 ms
LS2HDVAR30-600Q8	Receiver			
LS2HDVAP30-600Q88	Pair			
LS2HDVAE30-750Q8	Emitter	750 mm (29.5 in)	40	17 ms
LS2HDVAR30-750Q8	Receiver			
LS2HDVAP30-750Q88	Pair			
LS2HDVAE30-900Q8	Emitter	900 mm (35.4 in)	48	19 ms
LS2HDVAR30-900Q8	Receiver			
LS2HDVAP30-900Q88	Pair			
LS2HDVAE30-1050Q8	Emitter	1050 mm (41.3 in)	56	21 ms
LS2HDVAR30-1050Q8	Receiver			
LS2HDVAP30-1050Q88	Pair			
LS2HDVAE30-1200Q8	Emitter	1200 mm (47.2 in)	64	22 ms
LS2HDVAR30-1200Q8	Receiver			
LS2HDVAP30-1200Q88	Pair			
LS2HDVAE30-1350Q8	Emitter	1350 mm (53.1 in)	72	24 ms
LS2HDVAR30-1350Q8	Receiver			
LS2HDVAP30-1350Q88	Pair			
LS2HDVAE30-1500Q8	Emitter	1500 mm (59.0 in)	80	25 ms
LS2HDVAR30-1500Q8	Receiver			
LS2HDVAP30-1500Q88	Pair			
LS2HDVAE30-1650Q8	Emitter	1650 mm (65.0 in)	88	27 ms
LS2HDVAR30-1650Q8	Receiver			
LS2HDVAP30-1650Q88	Pair			
LS2HDVAE30-1800Q8	Emitter	1800 mm (70.9 in)	96	29 ms
LS2HDVAR30-1800Q8	Receiver			
LS2HDVAP30-1800Q88	Pair			

Replacement Parts and Accessories

Model	Description	
MGA-KSO-1	Keyed reset switch	
MGA-K-1	Replacement key	
STP-14	30 mm test piece	
LSHDMB-1	Standard end bracket kit with hardware (includes 2 end brackets and hardware)	
LSHD-TN4-4	Hardware kit to mount to MSA series stands (M4 T-nuts and screws; use with end brackets)	
LSHDCMB-1	1 bracket for 750-1050 mm long sensors	Center bracket kit (includes bracket(s)and hardware to mount to MSA series stands)
LSHDCMB-2	2 brackets for 1200-1800 mm long sensors	
LSHDVM-4	Vibration mounts	

Literature

Part Number	Description
122452	EZ-SCREEN Type 2 Instruction Manual
122450	Checkout Procedure Card (Daily)
122451	Checkout Procedure Card (Semi-Annual)