SSA-EBM Series Emergency Stop Buttons

Datasheet

22 mm Panel Mount Electro-Mechanical Push Buttons



- Push-to-stop, twist-to-release operation
- Rugged, modular design; easy assembly and installation
- Kits available for easy selection
- Choice of a metal base with or without enclosure; all kits include disc label with “Emergency Stop” legend
- Choice of normally closed (safety) or combination normally closed/normally open (non safety) contacts
- Latching design complies with ISO 13850; direct (positive) opening operation per EN 60947-5-1

WARNING:

- **Not a safeguarding device**
- Failure to follow these instructions could result in serious injury or death.
- This device is not considered a safeguarding device because it requires an overt action by an individual to stop machine motion or hazards. A safeguarding device limits or eliminates an individual's exposure to a hazard without action by the individual or others. This device cannot be substituted for required safeguarding. Refer to the applicable standards to determine those requirements.

SSA-EBM Models

Models		Contacts	Enclosure Included
SSA-EBM-02L		2 normally closed	No
SSA-EBM-11L		1 normally closed and 1 normally open	
SSA-EBM-12L		2 normally closed and 1 normally open	
SSA-EBM-02E		2 normally closed	Yes
SSA-EBM-11E		1 normally closed and 1 normally open	
SSA-EBM-12E		2 normally closed and 1 normally open	

Important -- Read This First!

The user is responsible for satisfying all local, state, and national laws, rules, codes, and regulations relating to the use of this product and its application. Banner Engineering Corp. has made every effort to provide complete application, installation, operation, and maintenance instructions. Please contact a Banner Applications Engineer with any questions regarding this product.

The user is responsible for making sure that all machine operators, maintenance personnel, electricians, and supervisors are thoroughly familiar with and understand all instructions regarding the installation, maintenance, and use of this product, and with the machinery it controls. The user and any personnel involved with the installation and use of this product must be thoroughly familiar with all applicable standards, some of which are listed within the specifications. Banner Engineering Corp. makes no claim regarding a specific recommendation of any organization, the accuracy or effectiveness of any information provided, or the appropriateness of the provided information for a specific application.

Applicable U.S. Standards

ANSI B11 Standards for Machine Tools Safety

Contact: Safety Director, AMT – The Association for Manufacturing Technology, 7901 Jones Branch Drive, Suite 900, McLean, VA 22102-4206 USA, www.amtonline.org

NFPA 79 Electrical Standard for Industrial Machinery

Contact: National Fire Protection Association, 1 Batterymarch Park, Quincy, MA 02169-7471 USA, www.nfpa.org/

ANSI/RIA R15.06 Safety Requirements for Industrial Robots and Robot Systems

Contact: Robotic Industries Association, 900 Victors Way, Suite 140, Ann Arbor, MI 48108 USA, www.robotics.org

Applicable International Standards

EN ISO 12100 Safety of Machinery – Basic Concepts, General Principles for Design

EN 60204-1 Electrical Equipment of Machines Part 1: General Requirements

EN ISO 13849-1:2015 Safety-Related Parts of Control Systems

ISO 13856-1 (EN1760-1), Safety of Machinery – Pressure-Sensitive Protective Devices

Contact: IHS Markit (Global Engineering Documents), 15 Inverness Way East, Englewood, CO 80112 USA, https://global.ihs.com/

© Banner Engineering Corp.

ПРОМЭЛЕКТРОНИКА/ sales@prom-elec.com

Overview

Models SSA-EB series are metal “mushroom-style” mechanical emergency stop buttons, available with or without a compact enclosure housing, to provide emergency stop actuation.

When the button is armed, the switch’s normally closed contacts are closed and its normally open contacts, if present, are open. When the button is pushed, the switch’s normally closed contacts open and its normally open contacts close. The contacts remain in this condition until the push button is manually rearmed. To manually rearm, twist the push button.

These emergency stop buttons are not safeguarding devices. They do not automatically protect personnel from injury.

Installation

Mechanical Installation

1. Latch the push button onto the mounting adapter by rotating it.
2. Attach the mounting adapter to the mounting surface using the incorporated screws. (Tmax = 7.14 in-lb/0.8 Nm). Snap the auxiliary contacts onto the mounting adapter. Use the disc label with legend at every switch per appropriate standards
3. Mount the E-Stop button on a rigid surface that is easily accessible and visible to operators and other personnel. Refer to appropriate standards for recommendations on number and placement.

Electrical Installation

To access the wiring chamber, remove four screws and the cover. Conduit mounting via removable rubber plug or knockout.

Assembly

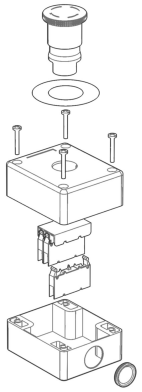

Maintenance

At machine set up, a Designated Person[1] should test each emergency stop push button for proper machine shutdown response.

The Designated Person should check the emergency stop buttons for proper operation, physical damage, button looseness, and excessive environmental contamination. This should take place on a periodic schedule determined by the user, based on the severity of the operating environment and the frequency of switch actuations

Adjust, repair, or replace components as needed. If inspection reveals contamination on the switch, thoroughly clean the switch and eliminate the cause of the contamination. Replace the switch and/or appropriate components when any parts or assemblies are damaged, broken, deformed, or badly worn; or if the electrical/mechanical specifications (for the environment and operating conditions) have been exceeded.

Always test the control system for proper functioning under machine control conditions after performing maintenance, replacing the emergency stop device, or replacing any component of the device.

Replacement Parts

IMPORTANT: Model numbers have been updated. 8-LM2T replacement parts are not compatible with LPS/LPX models. Please contact Banner Engineering with any questions.

LPSB6644

- 22.5 mm metal button (mounting adapter sold separately)
- Twist to release, mechanical latching ISO 13850 (EN 418) compliant
- Diameter 40 mm (without mounting adapter).



[1] A Designated Person is identified in writing by the employer as being appropriately trained to perform a specified checkout procedure. A Qualified Person possesses a recognized degree or certificate or has extensive knowledge, training, and experience to solve problems relating to the emergency stop installation (reference ANSI B30.2).

© Banner Engineering Corp. All rights reserved.

LPXAU120M
Metal mounting adapter for metal button



LPXC01
- Normally closed (N.C.) positively driven contact element
- Direct (positive) opening operation per IEC/EN 60947-5-1



LPXC10
Normally open (N.O.) auxiliary contact element



LPZP1A5
- Compact size - 70mm x 70mm x 56mm (2.7” x 2.7” x 2.2”)
- One 22mm hole (with keyway) for installation of emergency stop palm/push button
- Maximum of three contact blocks
- Polycarbonate construction
- Wire entry via three sides (M16, M20 or M25) or the bottom (M16)
- Environmental rating: IP66, IP67, and IP69K (with proper installation and rated button)
- Mounting hole location (x4) - 45mm x 58mm



LPXAU115
- 60 mm diameter
- Non-adhesive plastic legend with “Emergency Stop” inscription



Specifications

Emergency Stop Push Button

Mechanical Life
300,000 operations

Operating Force
0.8 kg

Environmental Rating
IP65; NEMA 4/13

Operating Temperature
–25 °C to +60 °C (–13 °F to +140 °F)

Mounting Adapter
The adapter is fixed to the mounting surface using incorporated screws (Tmax = 0.8 N·m)

Construction
Plastic parts: Polyamide and polycarbonate
Metal parts: Aluminum and zinc alloy

Certifications

Banner Engineering BV
Park Lane, Culliganlaan 2F bus 3
1831 Diegem, BELGIUM

Turck Banner LTD Blenheim House
Blenheim Court
Wickford, Essex SS11 8YT
GREAT BRITAIN

Compliant with EN/IEC 60497-1; -5-1

© Banner Engineering Corp. All rights reserved.

Required Overcurrent Protection

WARNING: Electrical connections must be made by qualified personnel in accordance with local and national electrical codes and regulations.

Overcurrent protection is required to be provided by end product application per the supplied table.

Overcurrent protection may be provided with external fusing or via Current Limiting, Class 2 Power Supply.

Supply wiring leads < 24 AWG shall not be spliced.

For additional product support, go to www.bannerengineering.com.

Supply Wiring (AWG)	Required Overcurrent Protection (A)	Supply Wiring (AWG)	Required Overcurrent Protection (A)
20	5.0	26	1.0
22	3.0	28	0.8
24	1.0	30	0.5

Contacts

European Rating

Utilization categories: AC15 and DC13

Ui = 690 V AC

Ith = 10 A

UL designation = A 600 Q600

Mechanical Life

1,000,000 operations

Connections

(1 or 2) 12 AWG (2.5 mm²) maximum wire size

Construction

Polyamide and polycarbonate

Environmental Rating

IP20

Operating Temperature

–25 °C to +60 °C (–13 °F to +140 °F)

Certifications

Banner Engineering BV
Park Lane, Culliganlaan 2F bus 3
1831 Diegem, BELGIUM

Turck Banner LTD Blenheim House
Blenheim Court
Wickford, Essex SS11 8YT
GREAT BRITAIN

Compliant with EN/IEC 60497-1; -5-1

SSA-EBM Dimensions

SSA-EBM-xxE E-Stop Buttons

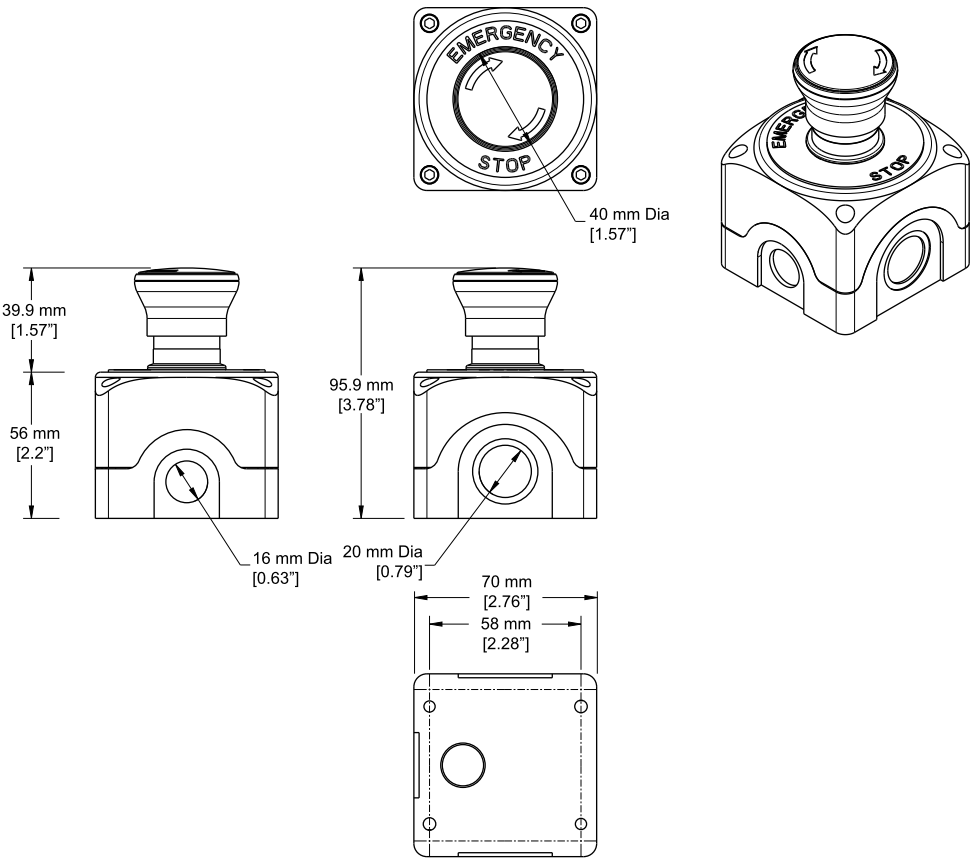

© Banner Engineering Corp. All rights reserved.

SSA-EBM-02L E-Stop Buttons

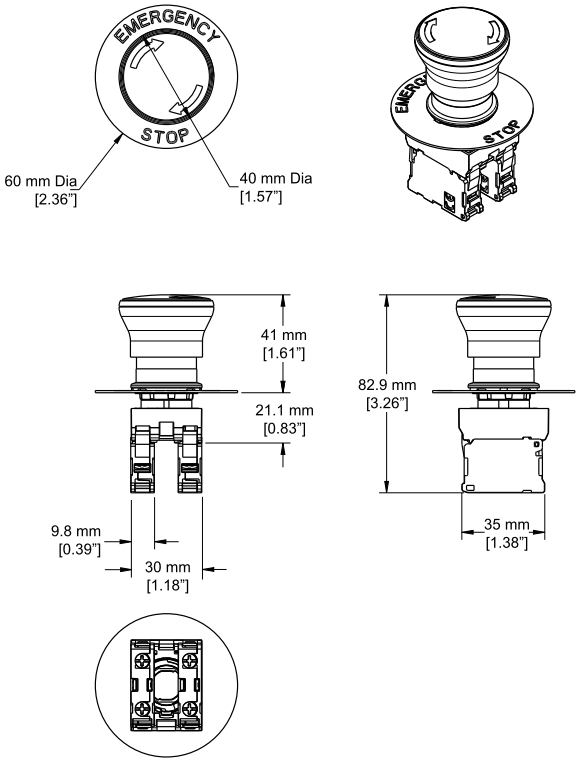

SSA-EBM-11L E-Stop Buttons

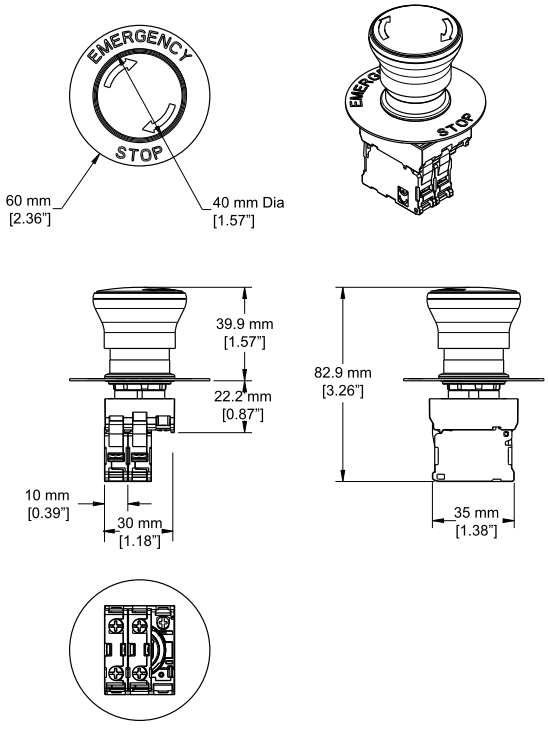

© Banner Engineering Corp. All rights reserved.

SSA-EBM-12L E-Stop Buttons

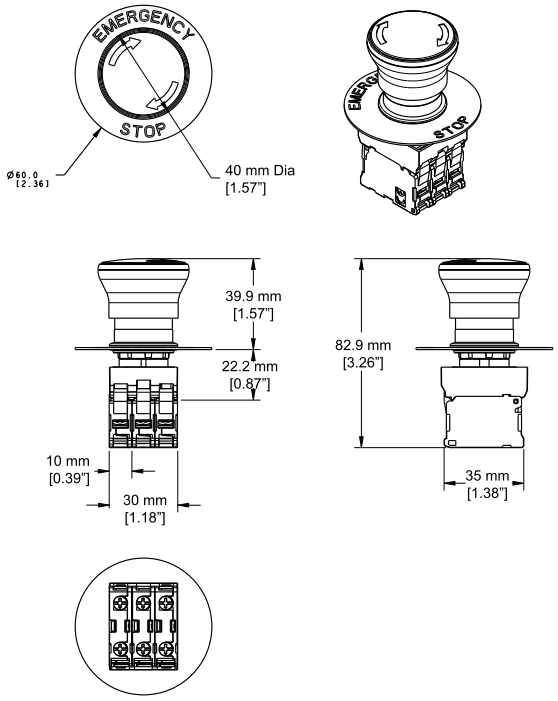

Banner Engineering Corp Limited Warranty

Banner Engineering Corp. warrants its products to be free from defects in material and workmanship for one year following the date of shipment. Banner Engineering Corp. will repair or replace, free of charge, any product of its manufacture which, at the time it is returned to the factory, is found to have been defective during the warranty period. This warranty does not cover damage or liability for misuse, abuse, or the improper application or installation of the Banner product.

THIS LIMITED WARRANTY IS EXCLUSIVE AND IN LIEU OF ALL OTHER WARRANTIES WHETHER EXPRESS OR IMPLIED (INCLUDING, WITHOUT LIMITATION, ANY WARRANTY OF MERCHANTABILITY OR FITNESS FOR A PARTICULAR PURPOSE), AND WHETHER ARISING UNDER COURSE OF PERFORMANCE, COURSE OF DEALING OR TRADE USAGE.

This Warranty is exclusive and limited to repair or, at the discretion of Banner Engineering Corp., replacement. **IN NO EVENT SHALL BANNER ENGINEERING CORP. BE LIABLE TO BUYER OR ANY OTHER PERSON OR ENTITY FOR ANY EXTRA COSTS, EXPENSES, LOSSES, LOSS OF PROFITS, OR ANY INCIDENTAL, CONSEQUENTIAL OR SPECIAL DAMAGES RESULTING FROM ANY PRODUCT DEFECT OR FROM THE USE OR INABILITY TO USE THE PRODUCT, WHETHER ARISING IN CONTRACT OR WARRANTY, STATUTE, TORT, STRICT LIABILITY, NEGLIGENCE, OR OTHERWISE.**

Banner Engineering Corp. reserves the right to change, modify or improve the design of the product without assuming any obligations or liabilities relating to any product previously manufactured by Banner Engineering Corp. Any misuse, abuse, or improper application or installation of this product or use of the product for personal protection applications when the product is identified as not intended for such purposes will void the product warranty. Any modifications to this product without prior express approval by Banner Engineering Corp will void the product warranties. All specifications published in this document are subject to change; Banner reserves the right to modify product specifications or update documentation at any time. Specifications and product information in English supersede that which is provided in any other language. For the most recent version of any documentation, refer to: www.bannerengineering.com.

For patent information, see www.bannerengineering.com/patents.

© Banner Engineering Corp. All rights reserved.