MULTI-BEAM® Ambient Light Scanner Blocks

Datasheet

For MULTI-BEAM modular photoelectric sensors

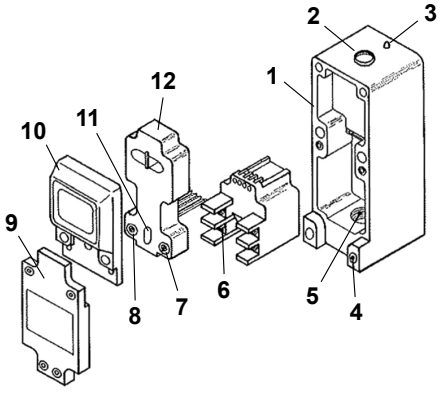

1. Scanner block housing
2. Sensitivity adjustment access
3. Status/alignment indicator LED
4. Mounting hole
5. Conduit entrance
6. Wiring terminals on the power block
7. Logic timing adjustment
8. Logic timing adjustment
9. Lower cover, supplied with the scanner block
10. Upper cover (lens), supplied with the scanner block
11. Light/dark operate select
12. Logic module

MULTI-BEAM modular components (scanner block, power block, and logic module) are all purchased separately.

WARNING:

- **Do not use this device for personnel protection**
- Using this device for personnel protection could result in serious injury or death.
- This device does not include the self-checking redundant circuitry necessary to allow its use in personnel safety applications. A device failure or malfunction can cause either an energized (on) or de-energized (off) output condition.

WARNING:

- **Not a stand-alone point-of-operation guarding device**
- This Banner device is not a stand-alone point-of-operation guarding device, as defined by OSHA regulations. Failure to install point-of-operation guards on hazardous machinery can result in a dangerous condition that could lead to serious injury or death.
- Install point-of-operation guarding devices, such as safety light curtains and/or hard guards, to protect personnel from hazardous machinery.

Overview

A Banner MULTI-BEAM Sensor is a compact modular self-contained photoelectric switch consisting of three components: a scanner block, a power block, and a logic module.

The **scanner** block comprises the housing for the sensor and contains a complete modulated photoelectric amplifier, the emitter and receiver optoelements and lenses, and space for the other modules.

The **power** block module provides the interface between the scanner block and the external circuit. It contains a power supply for the MULTI-BEAM plus a switching device (except in emitter-only power blocks) to interface the sensor to the circuit to be controlled.

The **logic** module interconnects the power block and scanner block both electrically and mechanically. It provides the desired timing logic function (if any) plus the ability to program the output for either light- or dark-operate.

The emitters of MULTI-BEAM opposed mode emitter/receiver pairs do not require a logic module. Emitter scanner blocks are supplied with a blade-pin to interconnect the scanner block and power block. Power block and logic modules are purchased separately. This modular design, with field-replaceable power block and logic modules, permits a large variety of sensor configurations, resulting in exactly the right sensor for any photoelectric application.

Ambient Light Scanner Block

A Banner MULTI-BEAM Ambient Light Receiver is a compact modular self-contained photoelectric switch that is operated by sunlight or an incandescent, fluorescent, infrared, or laser light source.

A common application involves mounting the scanner block underneath a roller conveyor, with the sensor pointing upwards between the rollers at the overhead factory lighting. Any objects passing over the sensor would then cast a shadow, resulting in an output (dark operate). Ambient receivers are used with LM5-14 delay logic to sense daylight for outdoor lighting control. These sensors can also sense the large amounts of infrared light (heat energy) which is emitted by hot or molten glass, metal, or plastic during processing of these materials.

Original Document
03497 Rev. B

7 July 2022

03497

ПРОМЭЛЕКТРОНИКА/ sales@prom-elec.com

Note: Ambient light receiver scanner blocks also work with 2-wire AC power blocks and logic modules. However, the light/dark operate functions are reversed when using 2-wire operation.

The circuitry of all MULTI-BEAM components is encapsulated within rugged, corrosion-resistant PBT polyester housings that meet or exceed NEMA 1, NEMA 3, NEMA 12, and NEMA 13 ratings. MULTI-BEAM ambient light receiver scanner blocks have a top-mounted red indicator LED that lights whenever a light level sufficient to cause a change in the output is being sensed. All MULTI-BEAM scanner blocks are totally solid-state for unlimited life.

Models

Ambient Light Receiver Models

Model Number	Amplifier	Response	Optical Response	Diagram
SBAR1	Normal Gain	10 ms on/off	Ultraviolet through near infrared (includes all visible wavelengths)	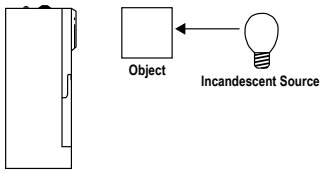
SBAR1GH	High Gain			

Model SBAR1 is for general applications, while model SBAR1GH is a high gain version and is about twenty times more sensitive to light as compared to the SBAR1. The range at which either model senses a light source depends on both the intensity of the light source and the contrast in intensity between the source and the rest of the ambient light in the viewing area.

Figure 1. Functional schematic

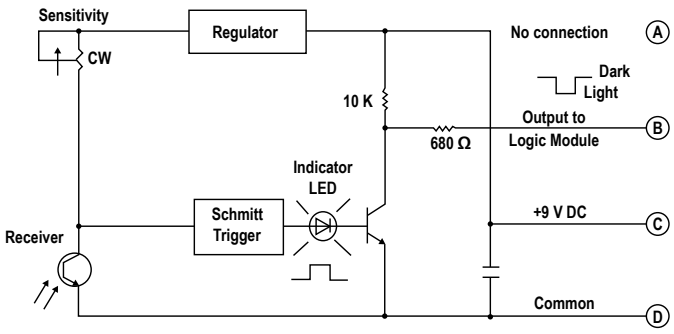

Glass Fiber Optic Ambient Light Receiver Model

Model Number	Amplifier	Response	Optical Response	Diagram
SBAR1GHF	High Gain	10 ms on/off	Wavelengths from visible blue through near infrared	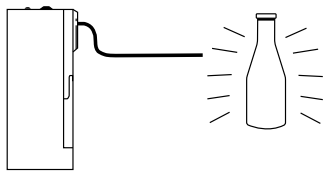

Model SBAR1GHF is identical to model SBAR1GH except that it is equipped with an upper cover assembly (model UC-RF) which allows an individual glass fiber optic assembly to be attached to the receiver optoelement. This model is used for ambient light detection in locations which are either too confined or too hot for the mounting of a complete scanner block. A typical application involves sensing product presence or counting during processing of red-hot or molten glass or metal. The addition of an L9, L16F, L16FAL, or L16FSS lens to a threaded fiber assembly (for example, IT23S) can narrow the angle of light acceptance to less than the angle of the SBAR1 lens. The high gain amplifier of model SBAR1GHF helps to offset light losses which are experienced with fiberoptic light pipes.

Note: Glass fibers do not efficiently pass ultraviolet wavelengths.

Figure 2. Direct Sensing of Radiant Infrared Energy

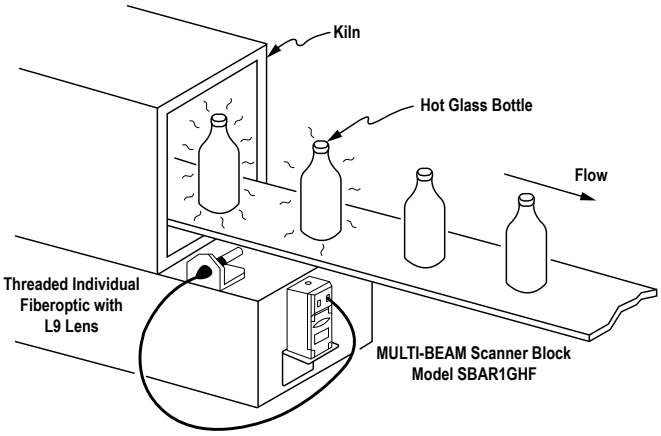

Alignment of Ambient Light Receivers

The alignment of SBAR1, SBAR1GH, and SBAR1GHS receivers is a matter of locating and adjusting them to pick up as much of the desired ambient light source as possible, while detecting as little as possible of other possibly interfering light sources.

Alignment to Lamp, Laser, or Infrared (Red-Hot Object) Light Source

1. Position the receiver where it will be mounted and point it at the light source.
2. If the LED indicator is not on, increase the SENSITIVITY control (rotate clockwise) until the LED turns on.
3. Direct the receiver (or fiber optic sensing tip) up-down and right-left, and locate the center of the zone of movement within which the LED indicator remains on.

   This is easiest to accomplish by reducing the SENSITIVITY control (rotate counterclockwise) to a point just above the lowest setting needed for the LED to turn on. The center of the on-zone corresponds to optimum alignment to the light source.
4. Remove the light source or otherwise create a dark condition for the receiver.
5. Turn the SENSITIVITY control clockwise until the LED turns on, and then reduce it two or more full turns (counterclockwise) past the point where the LED turns off.
6. If the LED never turns on, set the SENSITIVITY control at the maximum clockwise position.
7. Alternately present the light and dark conditions to the receiver.
   The indicator LED should be on in the light condition and off in the dark condition.
8. Secure all mounting hardware.
9. Connect the load to the output (terminals #3 and/or #4 of the power block).
10. Check the operation of the load by alternately presenting the light and dark conditions to the receiver.
    The action of the load should follow the receiver output.

Alignment to Sunlight

1. Point the receiver to the north, if possible (or to the south in the southern hemisphere), or otherwise angle the receiver so that it does not detect the sun directly at any time.
2. Adjust the SENSITIVITY control at dawn or dusk. Follow steps 4 through 10 in Alignment to Lamp, Laser, or Infrared (Red-Hot Object) Light Source on page 3.
3. For best results, use the model LM5-14 logic module. Set both DELAY settings to the maximum clockwise position.

Specifications

Supply Voltage
Input power and output connections are made via a power blocks
See datasheet 03499 (DC Power Blocks) or 03501 (AC Power Blocks), or refer to the Banner product catalog

Response Time
10 ms "on" and "off" independent of signal strength

Sensitivity Adjustment
Easily-accessible, located on top of scanner block beneath o-ring gasketed nylon screw cover
15-turn clutched control: rotate clockwise to increase sensitivity

Alignment Indicator
A red LED indicator on top of the scanner block lights when enough light is present to cause a change in the output of the scanner block
The threshold level is set by the SENSITIVITY adjustment

Construction
Reinforced PBT polyester housing
Components totally encapsulated
Stainless steel hardware

Environmental Rating
Meets NEMA 1, NEMA 2, NEMA 12, and NEMA 13

Operating Temperature
–40 °C to +70 °C (–40 °F to +158 °F)

Dimensions

All measurements are listed in millimeters [inches], unless noted otherwise.

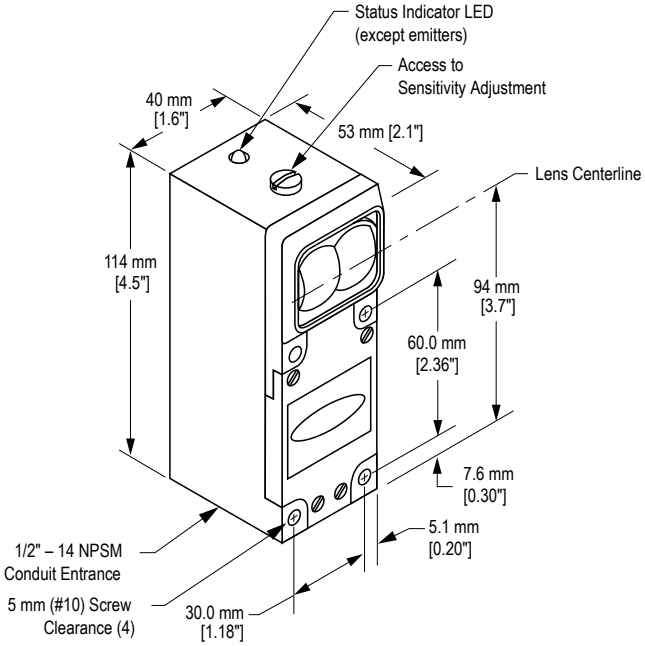

Banner Engineering Corp Limited Warranty

Banner Engineering Corp. warrants its products to be free from defects in material and workmanship for one year following the date of shipment. Banner Engineering Corp. will repair or replace, free of charge, any product of its manufacture which, at the time it is returned to the factory, is found to have been defective during the warranty period. This warranty does not cover damage or liability for misuse, abuse, or the improper application or installation of the Banner product.

THIS LIMITED WARRANTY IS EXCLUSIVE AND IN LIEU OF ALL OTHER WARRANTIES WHETHER EXPRESS OR IMPLIED (INCLUDING, WITHOUT LIMITATION, ANY WARRANTY OF MERCHANTABILITY OR FITNESS FOR A PARTICULAR PURPOSE), AND WHETHER ARISING UNDER COURSE OF PERFORMANCE, COURSE OF DEALING OR TRADE USAGE.

This Warranty is exclusive and limited to repair or, at the discretion of Banner Engineering Corp., replacement. **IN NO EVENT SHALL BANNER ENGINEERING CORP. BE LIABLE TO BUYER OR ANY OTHER PERSON OR ENTITY FOR ANY EXTRA COSTS, EXPENSES, LOSSES, LOSS OF PROFITS, OR ANY INCIDENTAL, CONSEQUENTIAL OR SPECIAL DAMAGES RESULTING FROM ANY PRODUCT DEFECT OR FROM THE USE OR INABILITY TO USE THE PRODUCT, WHETHER ARISING IN CONTRACT OR WARRANTY, STATUTE, TORT, STRICT LIABILITY, NEGLIGENCE, OR OTHERWISE.**

Banner Engineering Corp. reserves the right to change, modify or improve the design of the product without assuming any obligations or liabilities relating to any product previously manufactured by Banner Engineering Corp. Any misuse, abuse, or improper application or installation of this product or use of the product for personal protection applications when the product is identified as not intended for such purposes will void the product warranty. Any modifications to this product without prior express approval by Banner Engineering Corp will void the product warranties. All specifications published in this document are subject to change; Banner reserves the right to modify product specifications or update documentation at any time. Specifications and product information in English supersede that which is provided in any other language. For the most recent version of any documentation, refer to: www.bannerengineering.com.

For patent information, see www.bannerengineering.com/patents.

© Banner Engineering Corp. All rights reserved