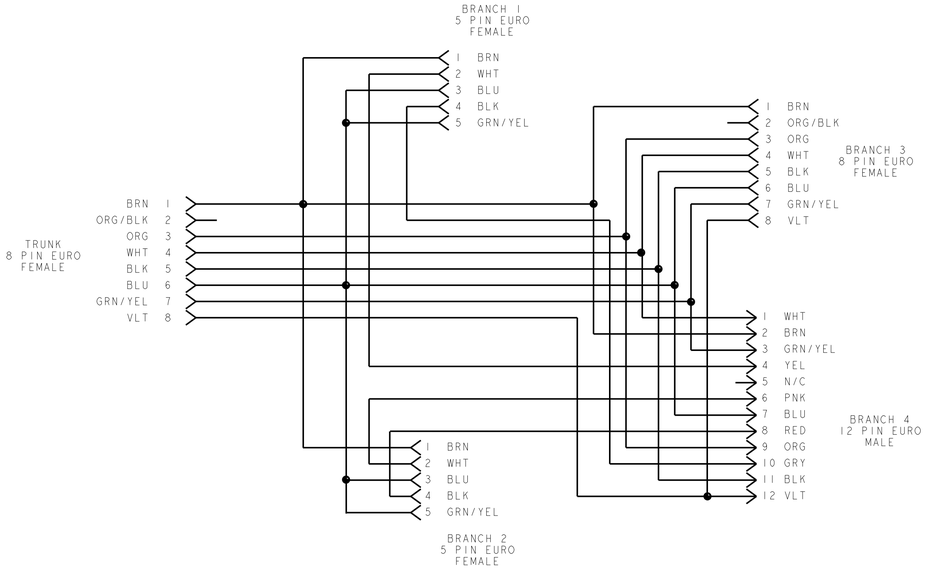

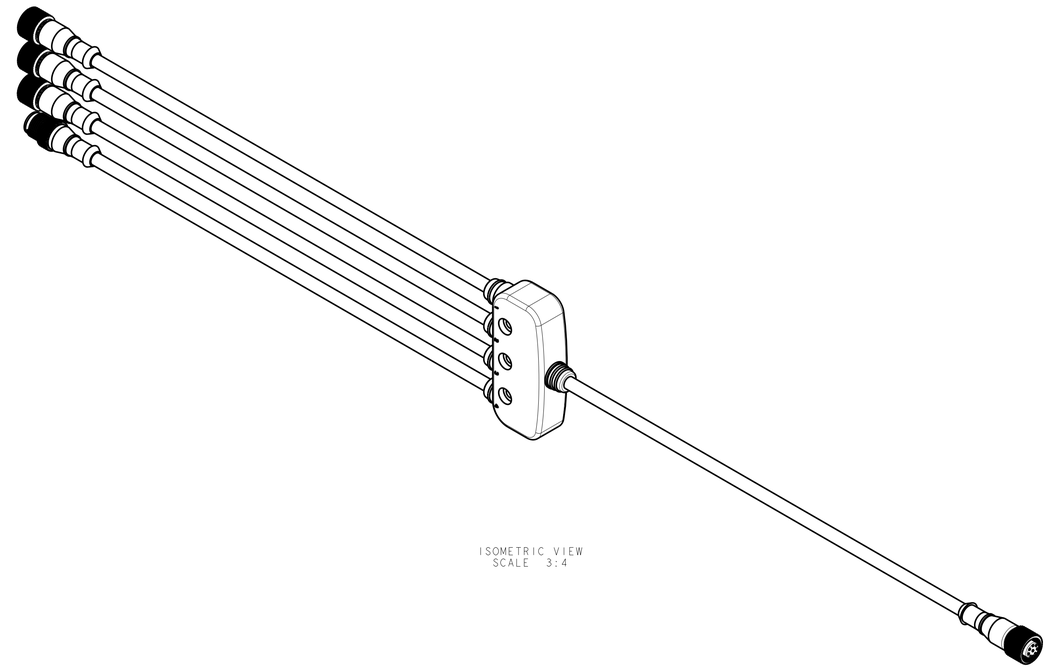

ISOMETRIC VIEW
SCALE 3:4

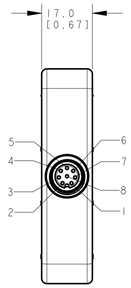

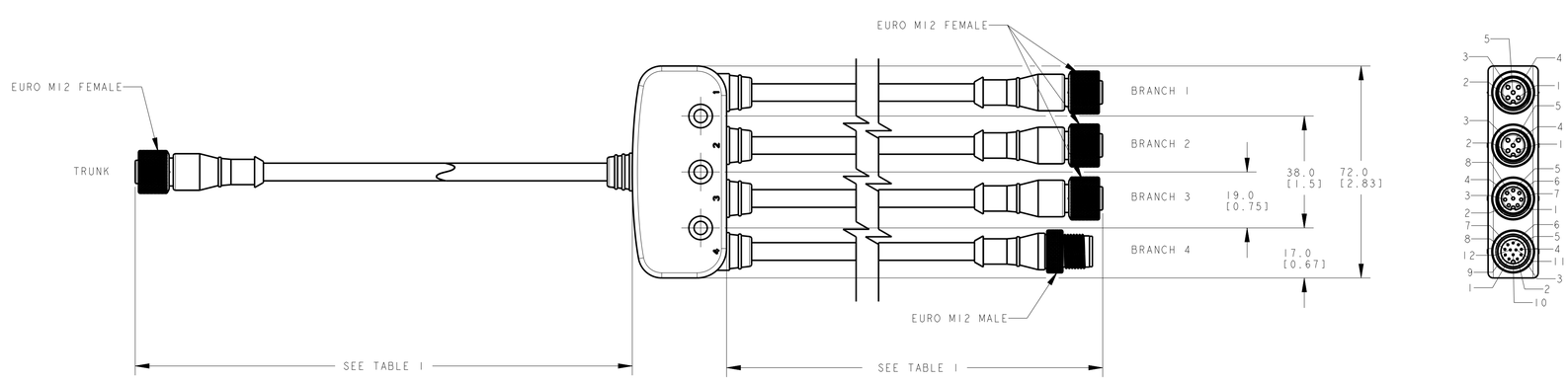

TABLE 1						
P/N	MODEL NUMBER	LENGTH OF TRUNK (mm)	LENGTH OF BRANCH 1 (mm)	LENGTH OF BRANCH 2 (mm)	LENGTH OF BRANCH 3 (mm)	LENGTH OF BRANCH 4 (mm)
94951	CSM4-M128IM125IM128I	300	300	300	300	300

NOTES:
1. ALL DIMENSIONS ARE MILLIMETERS [INCHES] UNLESS OTHERWISE NOTED.
2. REFER TO "www.bannerengineering.com" FOR ADDITIONAL DATA AND SPECIFICATIONS.

This drawing is the property of BANNER ENGINEERING CORP. Any use or reproduction, in any form, without prior written permission of Banner is prohibited.
© 2015 Banner Engineering Corp.

THIRD ANGLE PROJECTION

BANNER ENGINEERING CORP.
www.bannerengineering.com

TITLE
CSM4-M128IM125IM128I

SIZE	DRAWING NO.	REV.
D	211094	A
SCALE 1:1	SHEET 1 OF 1	

CREO

ПРОМЭЛЕКТРОНИКА/ sales@prom-elec.com