Datasheet

For use with Banner Safety Light Screen and Safety Light Grid Systems

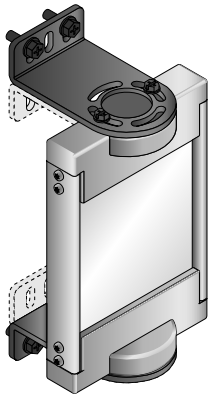

- Allows guarding of multi-sided applications with one emitter and receiver pair
- Sturdy, robust construction
- Extra width for use with long-range optical safety systems
- Safety glass reflective surface provides 85 percent reflectivity (equal to MSM Series corner mirrors)
- Black anodized aluminum extrusion and molded PBT end caps
- Mounts easily to MSA Series stands or other surfaces
- Available in 18 lengths

Models

Mirror Model	Reflective Area Length (Y)	Mounting Height (L1)[1]	Overall Height (L2)	Max. Light Screen Defined Area Height
SSM-100	100 mm (3.9 in)	211 mm (8.3 in)	178 mm (7.0 in)	50 mm (1.9 in)
SSM-200	200 mm (7.9 in)	311 mm (12.2 in)	278 mm (10.9 in)	150 mm (5.9 in)
SSM-375	375 mm (14.8 in)	486 mm (19.1 in)	453 mm (17.8 in)	325 mm (12.8 in)
SSM-475	475 mm (18.7 in)	586 mm (23.1 in)	553 mm (21.8 in)	425 mm (16.7 in)
SSM-550	550 mm (21.7 in)	661 mm (26.0 in)	628 mm (24.7 in)	500 mm (19.7 in)
SSM-675	675 mm (26.6 in)	786 mm (31.0 in)	753 mm (29.6 in)	625 mm (24.6 in)
SSM-825	825 mm (32.5 in)	936 mm (36.9 in)	903 mm (35.6 in)	775 mm (30.5 in)
SSM-875	875 mm (34.4 in)	986 mm (38.8 in)	953 mm (37.5 in)	825 mm (32.5 in)
SSM-975	975 mm (38.4 in)	1086 mm (42.8 in)	1053 mm (41.5 in)	925 mm (36.4 in)
SSM-1100	1100 mm (43.3 in)	1211 mm (47.7 in)	1178 mm (46.4 in)	1050 mm (41.3 in)
SSM-1175	1175 mm (46.3 in)	1286 mm (50.6 in)	1253 mm (49.3 in)	1125 mm (44.3 in)
SSM-1275	1275 mm (50.2 in)	1386 mm (54.6 in)	1353 mm (53.3 in)	1225 mm (48.2 in)
SSM-1400	1400 mm (55.1 in)	1511 mm (59.5 in)	1478 mm (58.2 in)	1350 mm (53.1 in)
SSM-1475	1475 mm (58.1 in)	1586 mm (62.5 in)	1553 mm (61.1 in)	1425 mm (56.1 in)
SSM-1550	1550 mm (61.0 in)	1661 mm (65.4 in)	1628 mm (64.1 in)	1500 mm (59.1 in)
SSM-1675	1675 mm (65.9 in)	1786 mm (70.3 in)	1753 mm (69.0 in)	1625 mm (63.9 in)
SSM-1750	1750 mm (68.9 in)	1861 mm (73.3 in)	1828 mm (72.0 in)	1700 mm (66.9 in)
SSM-1900	1900 mm (74.8 in)	2011 mm (79.2 in)	1978 mm (77.9 in)	1850 mm (72.8 in)

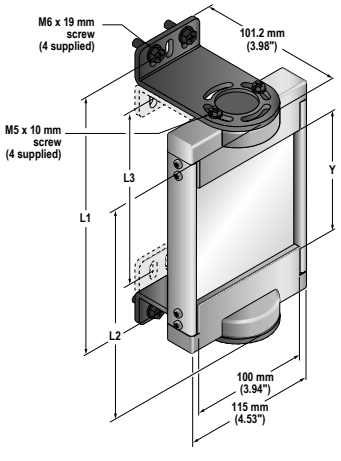

[1] The mounting brackets may be inverted from the positions shown at left (flanges pointing “inward” instead of “outward,” as shown). When this is done, dimension L1 decreases by 58 mm (2.3 inches).

Original Instructions
04-Apr-25

© Banner Engineering Corp. All rights reserved.
www.bannerengineering.com

61934
p/n: 61934 Rev. D

ПРОМЭЛЕКТРОНИКА/ sales@prom-elec.com

Overview

Banner SSM Series corner mirrors are designed for use with Banner Safety Light Screen systems and other optical safety systems, including the SGS Safety Grid System. They enable guarding along more than one side of an area using only one emitter/receiver pair.

SSM Series mirrors are compact and extremely robust to withstand industrial environments. Brackets are included for quick and easy mounting. Once mounted, a unique mirror end cap design allows rotation of the mirror to any angle. Each mirror is supplied with two mounting brackets and associated hardware.

The rear-surface glass mirrors are rated at 85 percent efficiency.

SSM Series mirrors are available in 18 lengths. SSM Series mirrors may be used with light screen sensors up to 1900 mm long. The mirror height (Y) should be a minimum of 50 mm longer than the distance between the top and bottom beams.

SSM Models	Light Curtain Series					
	SLS	S4B	LP	LS	Type 2	SGS
SSM-100						
SSM-200	150				150	
SSM-375	300	300	270	280	300	
SSM-475			410	350/420		
SSM-550	450	450		490	450	2–500
SSM-675	600	600	550	560/630	600	
SSM-825	750	750	690	700/770	750	
SSM-875			830	840		3–400
SSM-975	900	900		910	900	4–300
SSM-1100	1050	1050	970	980/1050	1050	
SSM-1175			1110	1120		
SSM-1275	1200	1200		1190	1200	4–400
SSM-1400	1350	1350	1250	1260/1330	1350	
SSM-1475			1390	1400		
SSM-1550	1500	1500		1470	1500	
SSM-1675			1530	1540/1610		
SSM-1750	1650	1650	1670	1680		
SSM-1900	1800	1800	1810	1750/1820		

Mirrors should be securely mounted to a solid surface that is free from vibration. Mirrors must be mounted parallel to their sensors, with the midpoint of the mirror(s) directly in line with the midpoint of the sensor’s defined area.

MSA Series stands may be used to mount SSM Series mirrors (requires adapter kit EZA-MBK-2, p/n 38722, sold separately). These stands offer an extruded channel design for convenient mirror (or sensor) height adjustment. See datasheet p/n 43687 for complete information. Several stand heights are available.

Stand Model	Stand Height (inches)	Mirror Length	
		Brackets Outward	Brackets Inward
MSA-S24-1	24	100 mm to 250 mm	100 mm to 375 mm
MSA-S42-1	42	100 mm to 675 mm	100 mm to 825 mm
MSA-S66-1	66	100 mm to 1275 mm	100 mm to 1275 mm
MSA-S84-1	84	100 mm to 1675 mm	100 mm to 1900 mm

Specifications

Construction

Mirror: Safety glass; rear-surface mirror

Mirror Frame: Molded PBT end caps; rigid aluminum extrusion

Bracket: Cold-rolled steel; black zinc chromate finish

Maintenance

Clean with a mild glass cleaning solution and a soft cloth

© Banner Engineering Corp. All rights reserved.
www.bannerengineering.com

Aligning Sensors and Corner Mirrors

Corner Mirror Alignment

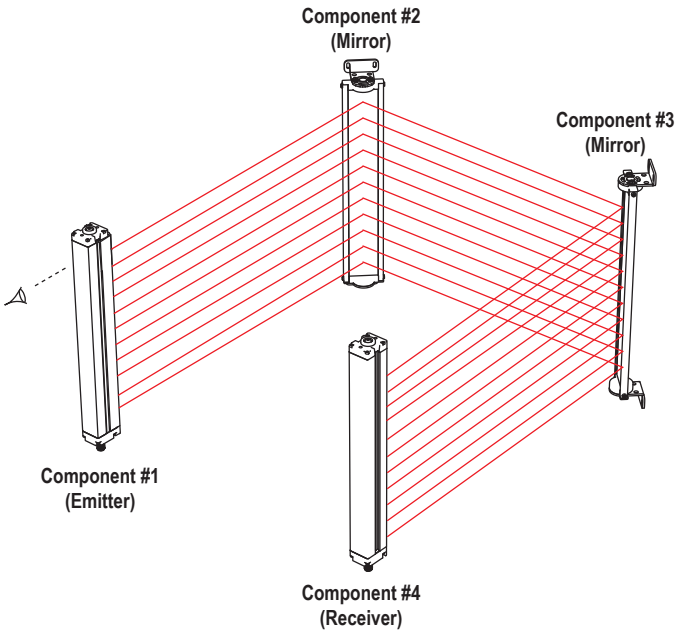

Mount the mirror(s) and the sensors so that they are all parallel. Use a level, if possible. Adjust the position of the sensors and the mirror(s) so that the midpoints of the mirror(s) and the sensors' defined areas are even. (A line connecting the midpoint of all components is illustrated by the dashed line in the drawing.) The midpoint of the defined area of a light curtain system can be determined by referring to the dimensions of the light curtain in its instruction manual.

Adjust the corner mirror(s) so that the angle of incidence to the mirrors equals the angle of reflection from the mirror. Sight from behind one of the sensors directly towards the mirror (or the first mirror in line). When alignment is correct, you will see the straight and centered reflection of the lens of the other sensor in the mirror.

Use the alignment indicator(s) of the safety light screen system (and the appropriate instruction manual) for final alignment.

Range Reduction Using Corner Mirrors

Use of corner mirrors reduces light curtain range (the maximum separation between the emitter and receiver). The following table lists the resultant range when using from one to four corner mirrors in the sensing path.

Light Curtain Maximum Range

Light Curtain Series	0 Mirrors	1 Mirror	2 Mirrors	3 Mirrors	4 Mirrors
EZ-SCREEN® LP Basic (SLPVA)	4 m (13 ft)	3.7 m (12.1 ft)	3.4 m (11.2 ft)	3.1 ft m (10.3 ft)	2.8 m (9.2 ft)
14 mm EZ-SCREEN® (SLS)	6 m (20 ft)	5.6 m (18.4 ft)	5.2 m (17.0 ft)	4.8 m (15.7 ft)	4.4 m (14.5 ft)
EZ-SCREEN® LP (SLP)	7 m (23 ft)	6.5 m (21.2 ft)	6.0 m (19.5 ft)	5.5 m (18.0 ft)	5.1 m (16.6 ft)
EZ-SCREEN® LS Basic (SLLV)	8 m (26.2 ft)	7.4 m (24.3 ft)	6.8 m (22.3 ft)	6.2 m (20.3 ft)	5.7 m (18.7 ft)
EZ-SCREEN® LS (SLL)	12 m (39 ft)	11 m (36 ft)	10.1 m (33 ft)	9.3 m (30.5 ft)	8.6 m (28 ft)
S4B Safety Light Curtain	12 m (39 ft)	11 m (36 ft)	10.1 m (33 ft)	9.3 m (30.5 ft)	8.6 m (28 ft)
EZ-SCREEN® Type 2 (LS2)	15 m (50 ft)	13.8 m (45 ft)	12.7 m (42 ft)	11.7 m (38 ft)	10.8 m (35 ft)
30 mm EZ-SCREEN® (SLS)	18 m (60 ft)	16.8 m (55 ft)	15.5 m (51 ft)	14.3 m (47 ft)	13.1 m (43 ft)
SGS Safety Grid System - Standard Range	30 m (98 ft)	27.6 m (90.6 ft)	25.4 m (83.3 ft)	23.4 m (76.8 ft)	21.5 m (70.5 ft)
SGS Safety Grid System - Long Range	60 m (197 ft)	55.2 m (181 ft)	50.8 m (166.7 ft)	46.7 m (153.2 ft)	42.9 m (140.9 ft)
SGS Safety Grid System - Active/Passive	8 m (26.2 ft)	7.4 m (24.3 ft)	6.8 m (22.3 ft)	6.2 m (20.3 ft)	5.7 m (18.7 ft)
SGS Safety Grid System - Active/Passive	6.5 m (21.2 ft)	6 m (19.5 ft)	5.5 m (18.0 ft)	5.1 m (16.6 ft)	4.7 m (15.4 ft)

Maximized excess gain is always important when installing a safety light curtain. Use hard guarding whenever possible to reduce the overall sensing range and the number of mirrors required. Also, keep sensor lenses and mirrors clean and properly aligned.

Excess Gain

```
Excess Gain = Maximum Range² ÷ Separation Distance²
```

Given the range, excess gain can be calculated for any distance by using the inverse square law. For example, the excess gain for a 12 m range EZ-SCREEN LS system at 3 m separation, using two corner mirrors, is calculated as follows:

© Banner Engineering Corp. All rights reserved.
www.bannerengineering.com

`E.G. ÷ 1x = 10.1² ÷ 3² = 11.3`

`E.G. = (1x)(11.3) = 11.3x`

Excess Gain Value Guidelines	
Maximum Excess Gain Required	**Operation Environment**
1.5x	Clean air: no dirt buildup on lenses or mirrors
5x	Slightly dirty: slight buildup of dust, dirt, oil, moisture, etc. on lenses or mirrors. Lenses and mirrors cleaned on a regular schedule.
10x	Moderately dirty: obvious contamination on lenses or mirrors (but not obscured). Lenses and mirrors cleaned occasionally or when necessary.
50x	Very dirty: heavy contamination on lenses and mirrors. Heavy fog, mist, dust, smoke, or oil film. Minimal cleaning of lenses and mirrors.

Banner Engineering Corp Limited Warranty

Banner Engineering Corp. warrants its products to be free from defects in material and workmanship for one year following the date of shipment. Banner Engineering Corp. will repair or replace, free of charge, any product of its manufacture which, at the time it is returned to the factory, is found to have been defective during the warranty period. This warranty does not cover damage or liability for misuse, abuse, or the improper application or installation of the Banner product.

THIS LIMITED WARRANTY IS EXCLUSIVE AND IN LIEU OF ALL OTHER WARRANTIES WHETHER EXPRESS OR IMPLIED (INCLUDING, WITHOUT LIMITATION, ANY WARRANTY OF MERCHANTABILITY OR FITNESS FOR A PARTICULAR PURPOSE), AND WHETHER ARISING UNDER COURSE OF PERFORMANCE, COURSE OF DEALING OR TRADE USAGE.

This Warranty is exclusive and limited to repair or, at the discretion of Banner Engineering Corp., replacement. **IN NO EVENT SHALL BANNER ENGINEERING CORP. BE LIABLE TO BUYER OR ANY OTHER PERSON OR ENTITY FOR ANY EXTRA COSTS, EXPENSES, LOSSES, LOSS OF PROFITS, OR ANY INCIDENTAL, CONSEQUENTIAL OR SPECIAL DAMAGES RESULTING FROM ANY PRODUCT DEFECT OR FROM THE USE OR INABILITY TO USE THE PRODUCT, WHETHER ARISING IN CONTRACT OR WARRANTY, STATUTE, TORT, STRICT LIABILITY, NEGLIGENCE, OR OTHERWISE.**

Banner Engineering Corp. reserves the right to change, modify or improve the design of the product without assuming any obligations or liabilities relating to any product previously manufactured by Banner Engineering Corp. Any misuse, abuse, or improper application or installation of this product or use of the product for personal protection applications when the product is identified as not intended for such purposes will void the product warranty. Any modifications to this product without prior express approval by Banner Engineering Corp will void the product warranties. All specifications published in this document are subject to change; Banner reserves the right to modify product specifications or update documentation at any time. Specifications and product information in English supersede that which is provided in any other language. For the most recent version of any documentation, refer to: www.bannerengineering.com.

For patent information, see www.bannerengineering.com/patents.

© Banner Engineering Corp. All rights reserved.
www.bannerengineering.com