BANNER®
the photoelectric specialist

T8 Opposed-Mode Sensors

Miniature Self-Contained Emitters and Receivers



T8 Opposed-Mode Sensor Features

- Extremely compact self-contained miniature sensor
- 10 to 30V dc operation
- Visible red sensing beam
- Choose dark- or light-operate models
- Choose models with NPN (sinking) or PNP (sourcing) output
- 2-wire (emitter) or 3-wire (receiver) hookup; output load capacity to 50 mA
- Choice of integral cable or quick-disconnect connector



Visible red, 660 nm

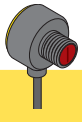

T8 Series Opposed-Mode Emitter (E) and Receiver (R) Models

Models	Range	Cable	Supply Voltage	Output Type	Excess Gain	Beam Pattern
T86EV emitter **T86EVQ emitter**	2.0 m (6.6')	2 m (6.5') 2-wire 3-Pin Pico pigtail QD	10 to 30V dc	—	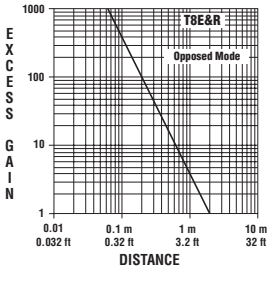	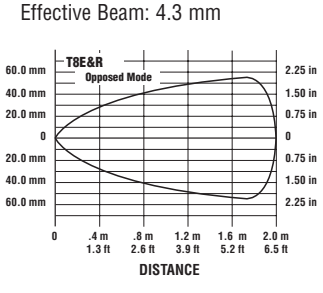
T8AN6R Receiver **T8AN6RQ Receiver**		2 m (6.5') 3-Pin Pico pigtail QD		NPN Light Operate		
T8RN6R Receiver **T8RN6RQ Receiver**		2 m (6.5') 3-Pin Pico pigtail QD		NPN Dark Operate		
T8AP6R Receiver **T8AP6RQ Receiver**		2 m (6.5') 3-Pin Pico pigtail QD		PNP Light Operate		
T8RP6R Receiver **T8RP6RQ Receiver**		2 m (6.5') 3-Pin Pico pigtail QD		PNP Dark Operate		

Effective Beam: 4.3 mm

WARNING . . . Not To Be Used for Personnel Protection

Never use these products as sensing devices for personnel protection. Doing so could lead to serious injury or death.

These sensors do NOT include the self-checking redundant circuitry necessary to allow their use in personnel safety applications. A sensor failure or malfunction can cause either an energized or de-energized sensor output condition. Consult your current Banner Safety Products catalog for safety products which meet OSHA, ANSI and IEC standards for personnel protection.

68669

Printed in USA 04/02 P/N 68669 rev. A

ПРОМЭЛЕКТРОНИКА/ sales@prom-elec.com

T8 Opposed-Mode Sensors

T8 Opposed-Mode Sensor Specifications

Supply Voltage and Current	10 to 30V dc (10% maximum ripple) at less than 25 mA (exclusive of load)
Supply Protection Circuitry	Protected against reverse polarity and transient voltages
Output Configuration	SPST solid-state switch Choose NPN (current sinking) or PNP (current sourcing) models Choose light operate (N.O.) or dark operate (N.C.) models
Output Rating	50 mA maximum **Off-state leakage current:** < 1 microamp at 24V dc **On-state saturation voltage:** < 0.25V at 10 mA dc; < 0.5V at 50 mA dc
Output Protection Circuitry	Protected against false pulse on power-up and continuous overload or short circuit of outputs Overload trip point ≥ 100 mA
Output Response Time	1 millisecond ON and 0.5 millisecond OFF (NOTE: 100 millisecond delay maximum on power-up; output does not conduct during this time)
Repeatability	100 microseconds
Indicators	**Receiver has both Green and Red LEDs** **Emitter has one Green LED** **Green ON steady** = power to sensor is ON **Green flashing** = output overload **Red ON steady** = light is sensed **Red flashing** = marginal excess gain (1-1.5x) in light condition
Construction	Reinforced polycarbonate/ABS alloy housing, acrylic window
Environmental Rating	IEC IP67; NEMA 6
Connections	2 m (6.5') attached cable: three #28 ga stranded conductors with PE insulation; PVC outer cable jacket; or 3-pin Pico-style pigtail quick-disconnect fitting. QD cables are ordered separately.
Operating Conditions	**Temperature:** -20° to +55°C (-4° to +131°F) **Maximum Relative Humidity:** 80% at 50°C (non-condensing)
Vibration and Mechanical Shock	**Vibration:** All models meet IEC 60068-2-6, IEC 60947-5-2, UL491 Section 40, MIL-STD-202F Method 201A; 10 to 60 Hz, 0.5 mm peak to peak **Shock:** All models meet IEC 60068-2-27, IEC 60947-5-2; 30g peak acceleration, 11 millisecond pulse duration, half-sine wave pulse shape
Application Notes	Reinforced polycarbonate/ABS alloy 8 mm threaded nut (included). Optional mounting bracket is available (page 4).
Certifications	CE

T8 Opposed-Mode Sensor Hookups

Emitters Cabled Hookup

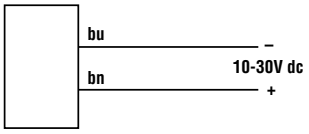

Receivers with NPN Outputs Cabled Hookup

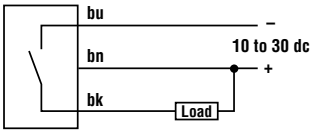

Receivers with PNP Outputs Cabled Hookup

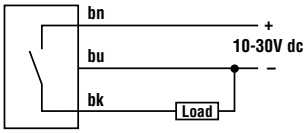

Quick-Disconnect Hookup

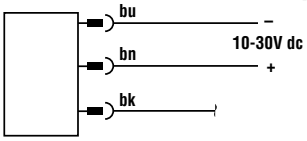

Quick-Disconnect Hookup

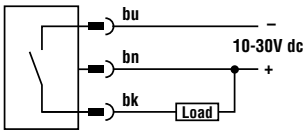

Quick-Disconnect Hookup

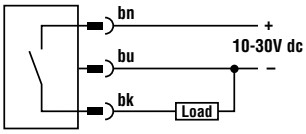

T8 Opposed-Mode Sensor Dimensions

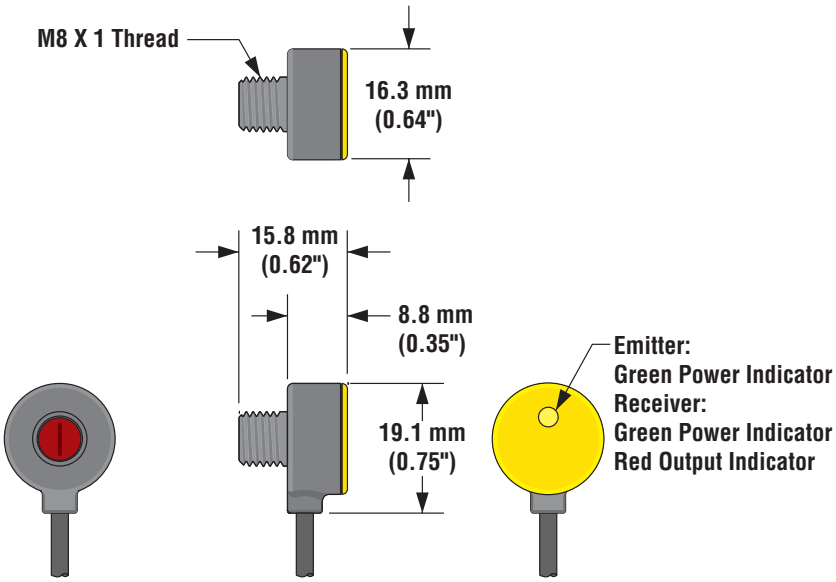

Accessories

Quick-Disconnect (QD) Cables

Style	Models	Length	Dimensions	Pin Out (Female View)
3-pin Pico-Style Straight	**PKG3M-2** **PKG3M-9**	2 m (6.5') 9 m (30')	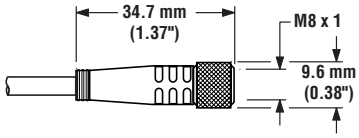	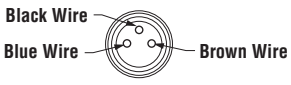

T8 Opposed-Mode Sensors

T8 Series Mounting Brackets

SMB8MM	• Right-angle bracket • 300 series stainless steel

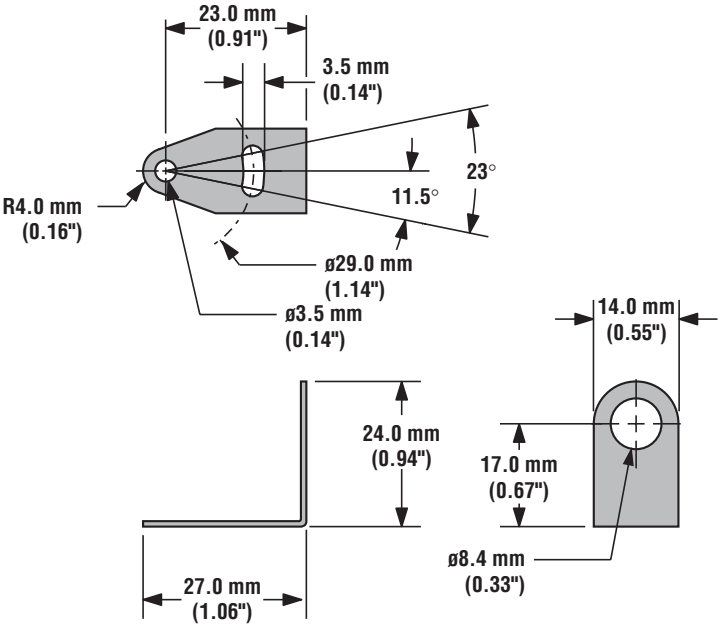



BANNER®
the photoelectric specialist

WARRANTY: Banner Engineering Corp. warrants its products to be free from defects for one year. Banner Engineering Corp. will repair or replace, free of charge, any product of its manufacture found to be defective at the time it is returned to the factory during the warranty period. This warranty does not cover damage or liability for the improper application of Banner products. This warranty is in lieu of any other warranty either expressed or implied.