MULTI-BEAM 3- and 4-wire DC Power Block Modules

Datasheet

For MULTI-BEAM modular photoelectric sensors

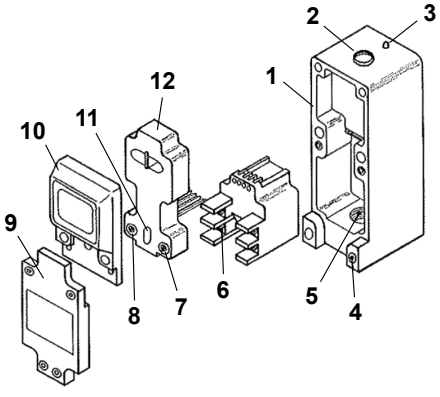

1. Scanner block housing
2. Sensitivity adjustment
3. Status/alignment indicator LED
4. Mounting hole
5. Conduit entrance
6. Wiring terminals on the power block
7. Logic timing adjustment
8. Logic timing adjustment
9. Lower cover, supplied with the scanner block
10. Upper cover (lens), supplied with the scanner block
11. Light/dark operate select
12. Logic module

MULTI-BEAM modular components (scanner block, power block, and logic module) are all purchased separately.

WARNING:

- **Do not use this device for personnel protection**
- Using this device for personnel protection could result in serious injury or death.
- This device does not include the self-checking redundant circuitry necessary to allow its use in personnel safety applications. A device failure or malfunction can cause either an energized (on) or de-energized (off) output condition.

Models

Models	Input	Output	Specifications	Certifications
PBT	10 V DC to 30 V DC at less than 60 mA (current draw depends on scanner block used). 10% max. ripple.	One open-collector NPN transistor. Current flows from the transistor to the negative side of the power supply. 250 mA max.	On-state voltage drop of less than 1 V DC. Off-state leakage current less than 10 microamps.	CE c UL us LISTED IND. CONT. EQ. 447Y
PBT48	44 V DC to 52 V DC at less than 60 mA (current draw depends on scanner block used). 10% max. ripple.			CE
PBT2	10 V DC to 30 V DC at less than 60 mA (current draw depends on scanner block used). 10% max. ripple.	Two open-collector NPN transistors: one normally open, one normally closed. 250 mA max. for each output.		
PBP	10 V DC to 30 V DC at less than 60 mA (current draw depends on scanner block used). 10% max. ripple.	One open-collector PNP transistor. Current flows from the positive side of the power supply to the transistor. 250 mA max.		
PBP48	44 V DC to 52 V DC at less than 60 mA (current draw depends on scanner block used). 10% max. ripple.			CE CSA
PBT-1	10 V DC to 30 V DC at less than 60 mA (current draw depends on scanner block used). 10% max. ripple.	N/A	N/A	CE
PBT48-1	44 V DC to 52 V DC at less than 60 mA (current draw depends on scanner block used). 10% max. ripple.			

Overview

A Banner MULTI-BEAM Sensor is a compact modular self-contained photoelectric switch consisting of three components: a scanner block, a power block, and a logic module.

The **scanner** block comprises the housing for the sensor and contains a complete modulated photoelectric amplifier, the emitter and receiver optoelements and lenses, and space for the other modules.

The **power** block module provides the interface between the scanner block and the external circuit. It contains a power supply for the MULTI-BEAM plus a switching device (except in emitter-only power blocks) to interface the sensor to the circuit to be controlled.

The **logic** module interconnects the power block and scanner block both electrically and mechanically. It provides the desired timing logic function (if any) plus the ability to program the output for either light- or dark-operate.

The emitters of MULTI-BEAM opposed mode emitter/receiver pairs do not require a logic module. Emitter scanner blocks are supplied with a blade-pin to interconnect the scanner block and power block. Power block and logic modules are purchased separately. This modular design, with field-replaceable power block and logic modules, permits a large variety of sensor configurations, resulting in exactly the right sensor for any photoelectric application.

Original Document
03499 Rev. C

8 July 2022

03499

ПРОМЭЛЕКТРОНИКА/ sales@prom-elec.com

Power Block Modules



MULTI-BEAM 3- and 4-wire DC power block modules provide regulated low voltage DC to power the scanner block module and logic module in MULTI-BEAM modular photoelectric sensors. They also contain a solid-state infinite-life switch (except in emitter-only scanner blocks) for switching external circuitry. Open-collector output transistors switch up to 250 mA maximum - see Specifications in Models on page 1.

On-state voltage drop is less than 1 V DC. Off-state leakage current is less than 10 microamps. Connections are made to heavy-duty screw terminals which accept up to #14 gauge wire (no lugs are necessary). All power blocks are epoxy-encapsulated and rated for –40 °C to +70 °C (–40 °F to +158 °F). Response times are determined by the scanner block used.

Models are available to operate from either 10 V DC to 30 V DC, or 44 V DC to 52 V DC. All 3- and 4-wire DC power block modules are color-coded gray.

If you are unable to find the power block for your interface, contact Banner Engineering.

Wiring Descriptions and Diagrams

PBT, PBT48

PBT is the most commonly used DC power block. Its output is an NPN transistor, which sends current to the negative side of the power supply. The load is connected between the output and the positive side of the power supply. The switching capacity is 250 mA. There is no connection to terminal #4.

PBT48 has exactly the same configuration as the PBT, but for 48 V DC systems.

Figure 1. Wiring of PBT and PBT48

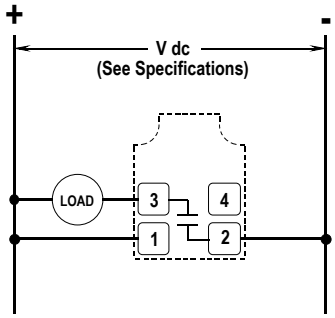

PBT2

PBT2 provides two NPN outputs: one normally open, and one normally closed (equivalent to SPDT relay). The normally closed output may be used when a load must de-energize when the MULTI-BEAM operates (for example, normally closed one-shot).

Note: Both outputs are open when DC power is removed.

Figure 2. Wiring of PBT2

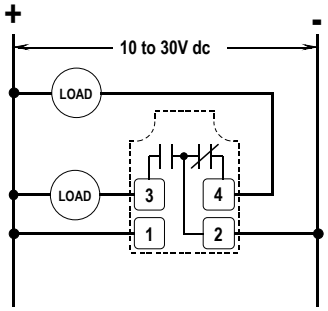

PBP, PBP48

PBP is similar to model PBT, except that it provides a PNP type output transistor. PNP outputs are frequently required when interfacing to logic systems and programmable logic controllers (PLCs) which require a positive source of DC voltage to generate an input condition. This type of interface may also be accomplished by using PBT with a pull-up resistor installed between transistors #1 and #3.

PBP48 has exactly the same configuration as the PBP, but for 48 V DC systems.

Figure 3. Wiring of PBP and PBP48

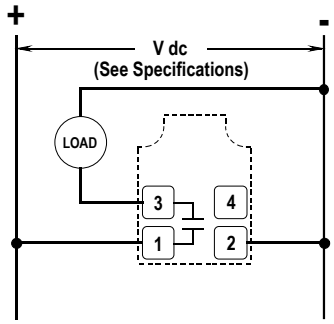

PBT-1, PBT48-1

These are power blocks for emitter scanner blocks only (models SBE, SBED, SBEX, SBEV, SBEXD, SBEF, SBEXF). Emitter assemblies do not require logic modules.

Figure 4. Wiring of PBT-1 and PBT48-1

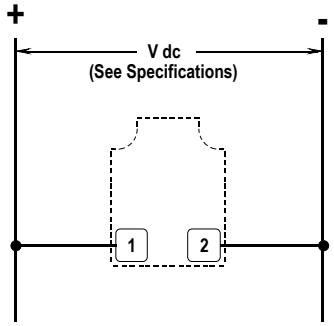

General Wiring

Figure 5. Wiring to a Programmable Controller (requiring an NPN current)

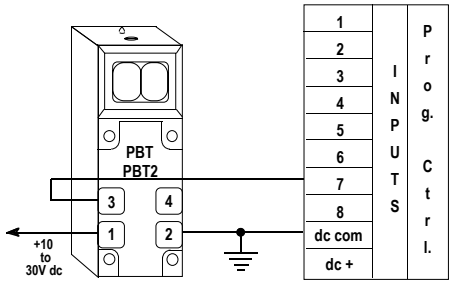

Use power blocks with NPN outputs to interface to PLCs and other logic devices requiring a current sink at the inputs. Connect the output of the power block (terminal #3) to any input of the PLC. Also, connect the negative of the MULTI-BEAM power supply (terminal #2) to the negative of the PLC power supply.

Figure 6. Wiring to a Programmable Controller (requiring a PNP current)

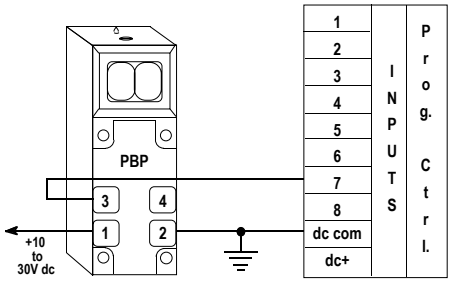

Use power blocks with PNP outputs to interface to PLCs and other logic devices requiring a current source at the inputs. Connect the output of the power block (terminal #3) to any input of the PLC. Also, connect the negative of the MULTI-BEAM power supply (terminal #2) to the negative of the PLC power supply.

Figure 7. Wiring to DC Relay or Solenoid (using NPN output)

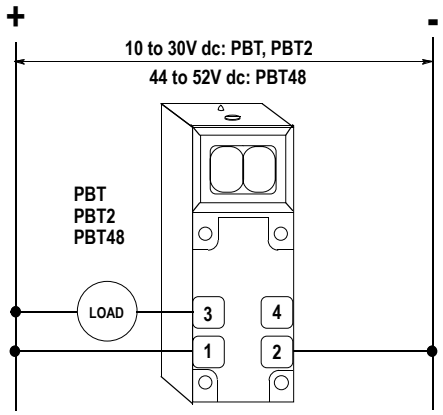

When using power blocks with current NPN outputs, simple loads connect between the power block output (terminal #3) and the positive supply (terminal #1).

Figure 8. Wiring to DC Relay or Solenoid (using PNP output)

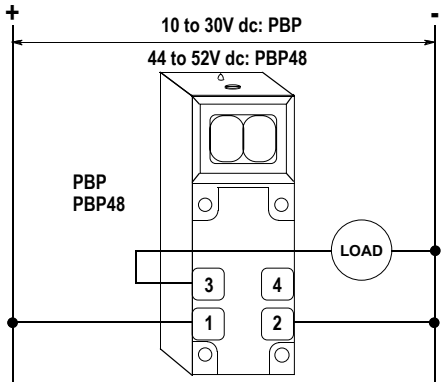

When using power blocks with current PNP outputs, simple loads connect between the power block output (terminal #3) and DC common (terminal #2).

Any number of MULTI-BEAMs may be connected in parallel to one load to create LIGHT-OR (light operate mode) or DARK-OR (dark operate mode) multiple sensor logic. In most situations, MULTI-BEAM DC power blocks cannot wire in series. However, addition of an interposing relay with a normally closed contact or a Banner logic module will permit AND logic with a parallel sensor array.

Note: MULTI-BEAM DC power blocks cannot be wired in series.

Figure 9. Parallel Wiring to a Common Load (requiring NPN current)

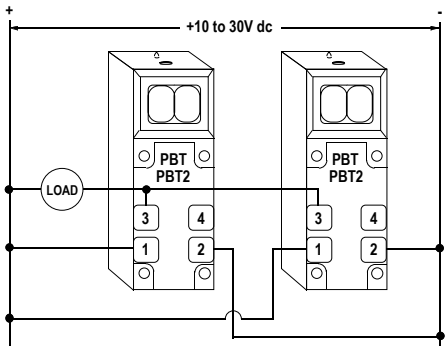

Figure 10. Parallel Wiring to a Common Load (requiring PNP current)

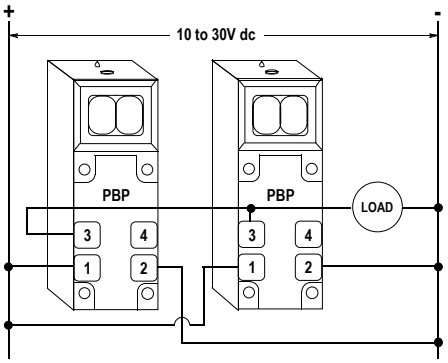

Figure 11. Wiring to Logic Gate

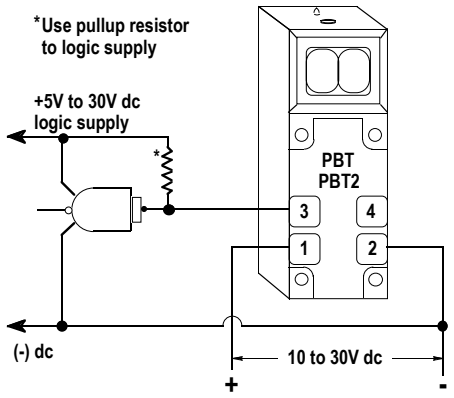

A logic zero (0 V DC) is applied to the gate input when the MULTI-BEAM output is energized. When de-energized, a logic one is applied. The logic supply must be common to the MULTI-BEAM supply negative.

Figure 12. Wiring of DC Emitter

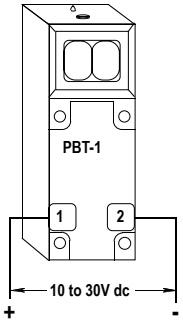

MULTI-BEAM emitter-only scanner blocks use DC power block models PBT-1 or PBT48-1. These power blocks connect directly across the DC supply, as shown. Emitter models: SBE, SBED, SBEX, SBEV, SBEXD, SBEF.

Figure 13. Wiring to MAXI-AMP Logic Module

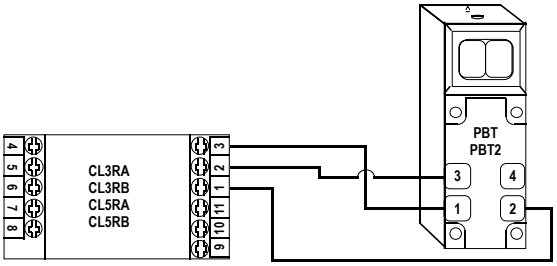

The NPN output(s) of MULTI-BEAM power block models PBT and PBT2 may be connected directly to the input of CL-series MAXI-AMP modules. A MAXI-AMP which is powered by AC voltage offers a DC supply with enough capacity to power one MULTI-BEAM sensor, as shown in this wiring diagram. When emitter/receiver pairs are used, the emitter should be powered from a separate power source (for example, using PBA-1, etc.).

Figure 14. Wiring to B-Series Logic (MRB chassis)

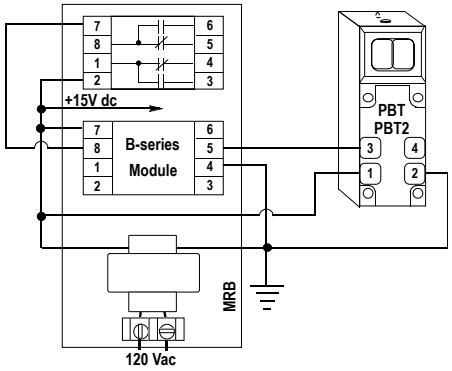

The NPN output(s) of MULTI-BEAM power block models PBT and PBT2 may be connected directly to the input (terminal #5) or to the auxiliary input (terminal #3) of any Banner B-series logic model. The MULTI-BEAM is powered by the MRB chassis as shown. Additional logic may be added on a longer chassis. Banner PLUG-LOGIC modules may also be used.

Figure 15. Wiring to MICRO-AMP Logic (model MPS-15 chassis)

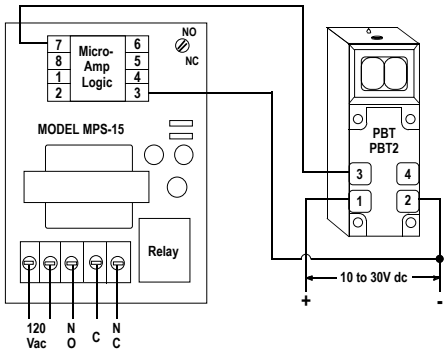

The NPN output(s) of MULTI-BEAM power block models PBT and PBT2 may be connected directly to the primary input (terminal #7) or the other inputs of MICRO-AMP logic modules. The following logic modules may be used:

MA4-2 (one shot)
MA5 (on/off delay)
MA4G (4-input AND)
MA4L (latch)

Figure 16. Wiring to Counter

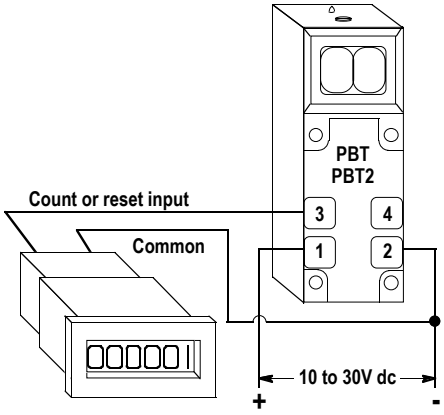

Most counters, totalizers, rate meters, etc., including the battery-powered LCD types, accept the NPN output of MULTI-BEAM power block models PBT and PBT2 as an input. Counters which are powered by AC line voltage usually offer a low voltage DC supply with enough capacity to power one MULTI-BEAM (≥10 V DC at ≥60 mA).

Banner Engineering Corp. Limited Warranty

Banner Engineering Corp. warrants its products to be free from defects in material and workmanship for one year following the date of shipment. Banner Engineering Corp. will repair or replace, free of charge, any product of its manufacture which, at the time it is returned to the factory, is found to have been defective during the warranty period. This warranty does not cover damage or liability for misuse, abuse, or the improper application or installation of the Banner product.

THIS LIMITED WARRANTY IS EXCLUSIVE AND IN LIEU OF ALL OTHER WARRANTIES WHETHER EXPRESS OR IMPLIED (INCLUDING, WITHOUT LIMITATION, ANY WARRANTY OF MERCHANTABILITY OR FITNESS FOR A PARTICULAR PURPOSE), AND WHETHER ARISING UNDER COURSE OF PERFORMANCE, COURSE OF DEALING OR TRADE USAGE.

This Warranty is exclusive and limited to repair or, at the discretion of Banner Engineering Corp., replacement. **IN NO EVENT SHALL BANNER ENGINEERING CORP. BE LIABLE TO BUYER OR ANY OTHER PERSON OR ENTITY FOR ANY EXTRA COSTS, EXPENSES, LOSSES, LOSS OF PROFITS, OR ANY INCIDENTAL, CONSEQUENTIAL OR SPECIAL DAMAGES RESULTING FROM ANY PRODUCT DEFECT OR FROM THE USE OR INABILITY TO USE THE PRODUCT, WHETHER ARISING IN CONTRACT OR WARRANTY, STATUTE, TORT, STRICT LIABILITY, NEGLIGENCE, OR OTHERWISE.**

Banner Engineering Corp. reserves the right to change, modify or improve the design of the product without assuming any obligations or liabilities relating to any product previously manufactured by Banner Engineering Corp. Any misuse, abuse, or improper application or installation of this product or use of the product for personal protection applications when the product is identified as not intended for such purposes will void the product warranty. Any modifications to this product without prior express approval by Banner Engineering Corp will void the product warranties. All specifications published in this document are subject to change; Banner reserves the right to modify product specifications or update documentation at any time. Specifications and product information in English supersede that which is provided in any other language. For the most recent version of any documentation, refer to: www.bannerengineering.com.

For patent information, see www.bannerengineering.com/patents.

© Banner Engineering Corp. All rights reserved