Telescoping Stands and Brackets for DUO-TOUCH® Run Bar with STB Buttons

Telescoping Stands

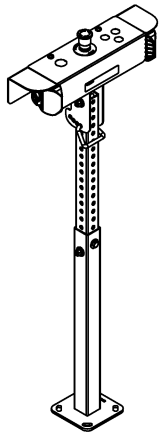

Model: STBA-RB1-S1

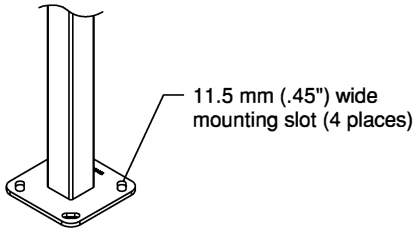

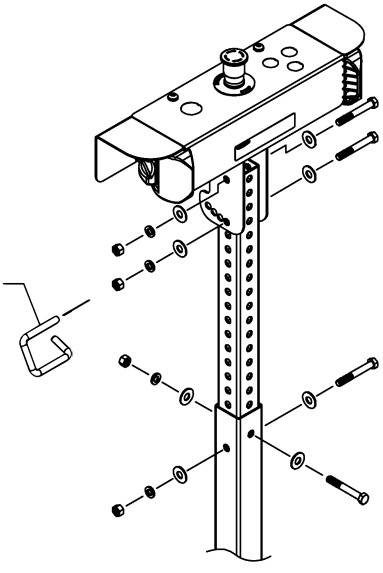

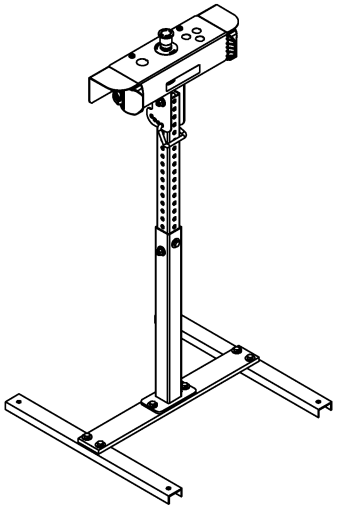

Model: STBA-RB1-S2

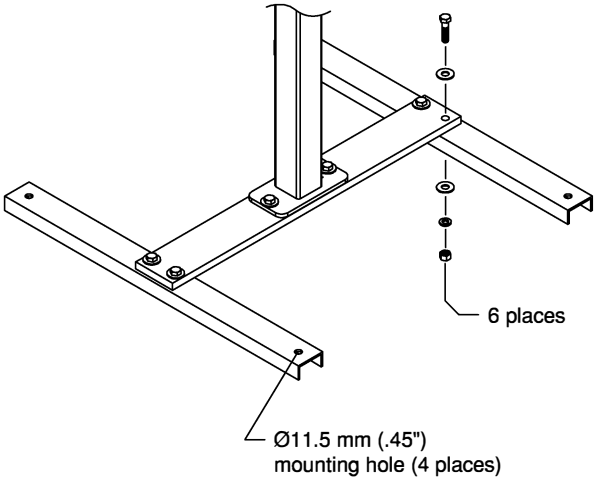

Mounting Brackets

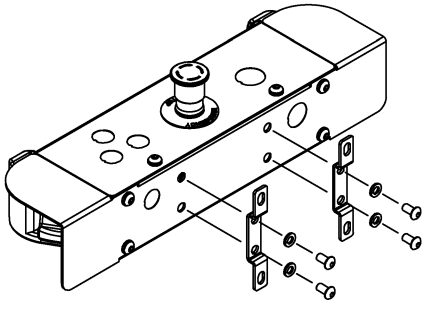

Model: STBA-RB1-MB1

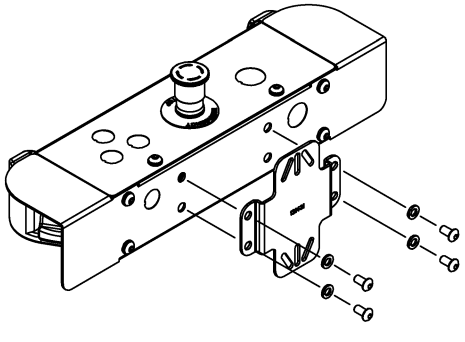

Model: STBA-RB1-MB2

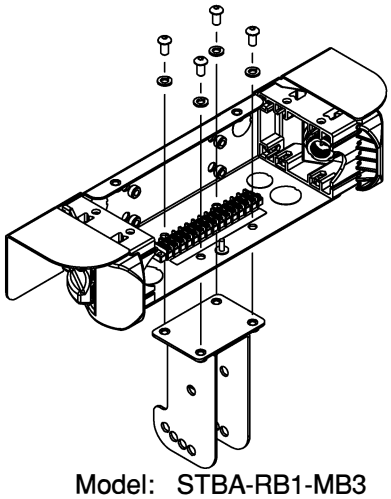

Model: STBA-RB1-MB3

Rev. A

Banner Engineering Corp. - Minneapolis, MN U.S.A.
www.bannerengineering.com - Tel.: 763.544.3164

135635

ПРОМЭЛЕКТРОНИКА/ sales@prom-elec.com

Dimensions

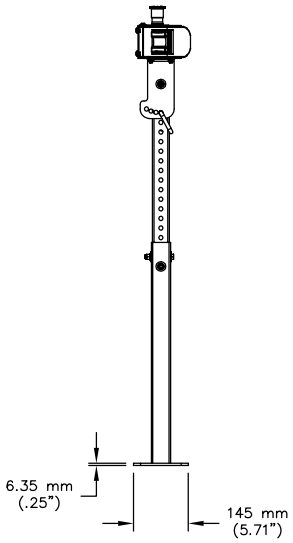

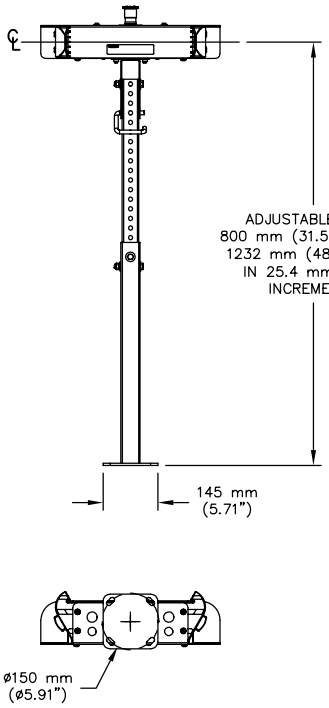

Model: STBA-RB1-S1

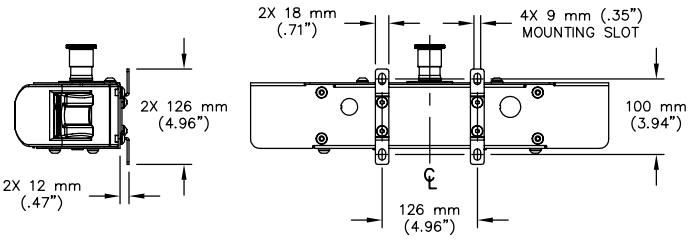

Model: STBA-RB1-MB1

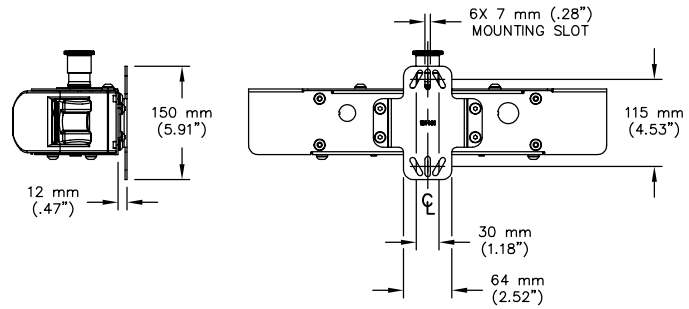

Model: STBA-RB1-MB2

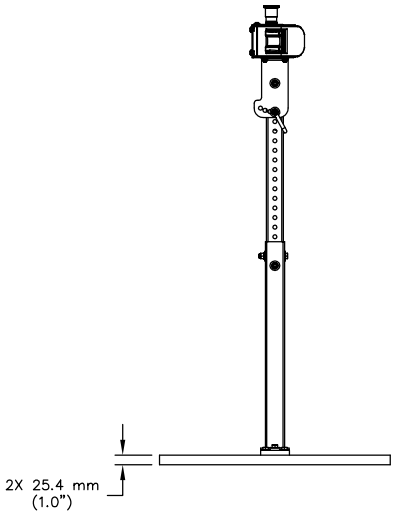

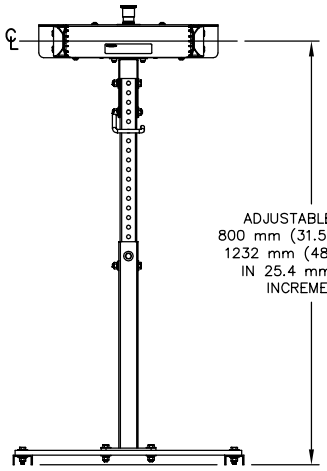

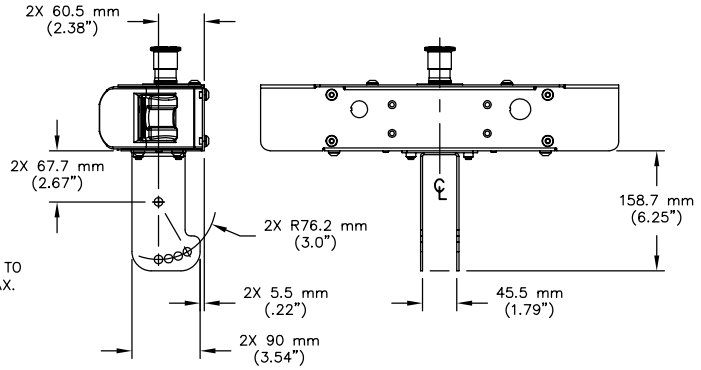

Model: STBA-RB1-MB3

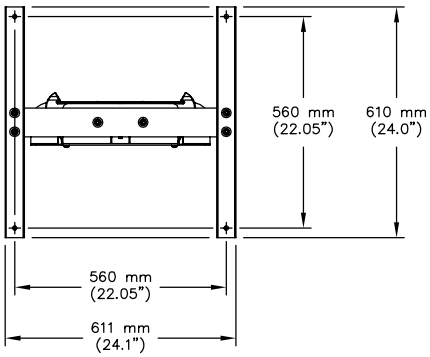

Model: STBA-RB1-S2

more sensors, more solutions

WARRANTY: Banner Engineering Corp. warrants its products to be free from defects for one year. Banner Engineering Corp. will repair or replace, free of charge, any product of its manufacture found to be defective at the time it is returned to the factory during the warranty period. This warranty does not cover damage or liability for the improper application of Banner products. This warranty is in lieu of any other warranty either expressed or implied.