MODEL NO.	"L"	"BL"	"D"	P/N
BT250S	600	7.5 ±.5	.125	17398
BT.752S	24	7.5 ±.5	.046	17862
BT.753S	36	7.5 ±.5	.046	17381
BT11S	12	7.5 ±.5	.062	20487
BT12S	24	7.5 ±.5	.062	20216
BT13S	36	7.5 ±.5	.062	17264
BT14S	48	7.5 ±.5	.062	20105
BT15S	60	7.5 ±.5	.062	20340
BT16S	72	7.5 ±.5	.062	20068
BT18.3S	99	7.5 ±.5	.062	20057
BT18S	96	7.5 ±.5	.062	20353
BT19.6S	115	7.5 ±.5	.062	20056
BT21.2S	14	7.5 ±.5	.125	17969
BT21.5S	18	7.5 ±.5	.125	17266
BT21.7S	20	7.5 ±.5	.125	20759
BT210.5S	126	7.5 ±.5	.125	20055
BT210S	120	7.5 ±.5	.125	17267
BT211S	132	7.5 ±.5	.125	17383
BT23S	36	7.5 ±.5	.125	17276

NOTES:

1. 'M600' SUFFIX INDICATES FIBER POTTED ON ANGLED END WITH EPOXY OPERATES IN MAX. TEMPERATURE OF 600°F.
2. TABLE IS INCHES ONLY.

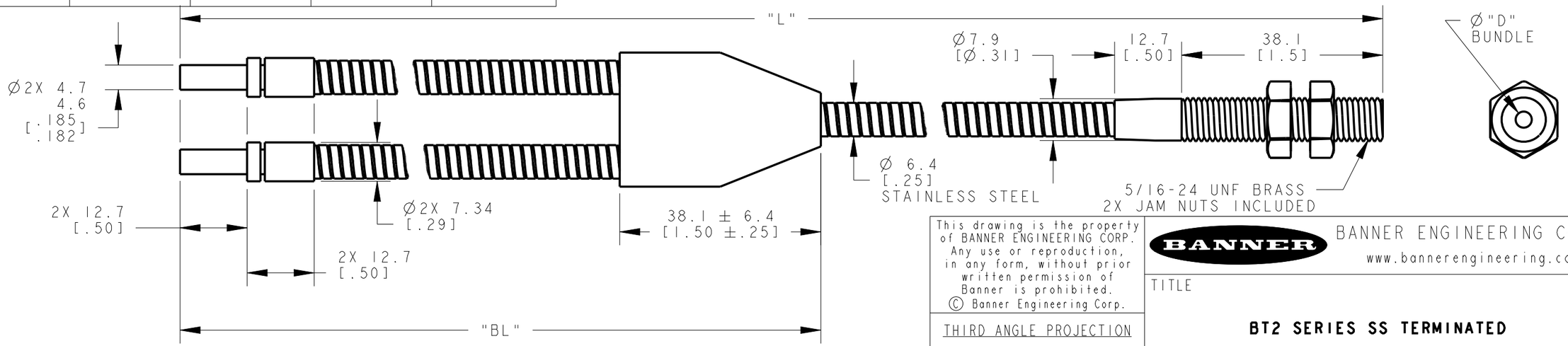

NOTES:
1. ALL DIMENSIONS ARE MILLIMETERS [INCHES] UNLESS OTHERWISE NOTED.
2. REFER TO "www.bannerengineering.com" FOR ADDITIONAL DATA AND SPECIFICATIONS.

This drawing is the property of BANNER ENGINEERING CORP. Any use or reproduction, in any form, without prior written permission of Banner is prohibited.
© Banner Engineering Corp.

THIRD ANGLE PROJECTION

BANNER ENGINEERING CORP.
www.bannerengineering.com

TITLE

BT2 SERIES SS TERMINATED

SIZE	DRAWING NO.	REV.
B	161908	B
SCALE 5:4		SHEET 1 OF 3

CREO

ПРОМЭЛЕКТРОНИКА/ sales@prom-elec.com

MODEL NO.	"L"	"BL"	"D"	P/N
BT25S	60	7.5 ±.5	.125	17284
BT26S	72	7.5 ±.5	.125	17285
BT27S	84	7.5 ±.5	.125	17367
BT28S	96	7.5 ±.5	.125	17286
BT29S	108	7.5 ±.5	.125	17287
BT11.2S	14	7.5 ±.5	.062	21126
BT249S	588	7.5 ±.5	.125	21253
BT112S	144	7.5 ±.5	.062	21296
BT116.4S	197	7.5 ±.5	.062	21361
BT122S	264	7.5 ±.5	.062	21819
BT216S	192	7.5 ±.5	.125	21877
BT120S	240	7.5 ±.5	.062	22029
BT110S	120	7.5 ±.5	.062	22088
BT.443S	36	7.5 ±.5	.027	22424
BT.4410S	120	7.5 ±.5	.027	22481
BT21.33S	16	7.5 ±.5	.125	22542
BT21.3S	15	7.5 ±.5	.125	22544
BT214S	168	7.5 ±.5	.125	22568
BT2.8S	9	4.5 ±.5	.125	22621
BT21.8S	21	7.5 ±.5	.125	00000
BT11.5S	18	7.5 ±.5	.062	22773
BT17S	84	7.5 ±.5	.062	22786
BT223S	276	7.5 ±.5	.125	22803
BT13.5S	42	7.5 ±.5	.062	22891
BT1.53S	36	7.5 ±.5	.090	23086
BT213S	156	7.5 ±.5	.125	23352
BT.754S	48	7.5 ±.5	.046	23241
BT216.4S	197	7.5 ±.5	.125	00000
BT14.5S	54	7.5 ±.5	.062	23357
BT1.53.5S	42	7.5 ±.5	.090	00000

MODEL NO.	"L"	"BL"	"D"	P/N
BT.756S	72	7.5 ±.5	.046	23407
BT240S	480	7.5 ±.5	.125	00000
BT219S	228	7.5 ±.5	.125	24468
BT.55S	60	7.5 ±.5	.032	24508
BT226S	312	7.5 ±.5	.125	24577
BT115S	180	7.5 ±.5	.062	24590
BT.755S	60	7.5 ±.5	.046	24593
BT217S	204	7.5 ±.5	.125	24626
BT130S	360	7.5 ±.5	.062	00000
BT1.51.5S	18	7.5 ±.5	.090	00000
BT113S	156	7.5 ±.5	.062	64371
BT2.83S	10	7.5 ±.5	.125	64409
BT.446S	72	7.5 ±.5	.027	00000
BT28.33S	100	7.5 ±.5	.125	00000
BT212S	144	7.5 ±.5	.125	17268
BT215S	180	7.5 ±.5	.125	17269
BT21S	12	7.5 ±.5	.125	17271
BT22.5S	30	7.5 ±.5	.125	20833
BT220S	240	7.5 ±.5	.125	17272
BT225S	300	7.5 ±.5	.125	17838
BT22S	24	7.5 ±.5	.125	17274
BT230S	360	7.5 ±.5	.125	20372
BT24.33S	52	7.5 ±.5	.125	20307
BT24.5S	54	7.5 ±.5	.125	17280
BT24S	48	7.5 ±.5	.125	17282

NOTES:
1. ALL DIMENSIONS ARE MILLIMETERS [INCHES] UNLESS OTHERWISE NOTED.
2. REFER TO "www.bannerengineering.com" FOR ADDITIONAL DATA AND SPECIFICATIONS.

This drawing is the property of BANNER ENGINEERING CORP. Any use or reproduction, in any form, without prior written permission of Banner is prohibited.
© Banner Engineering Corp.

THIRD ANGLE PROJECTION

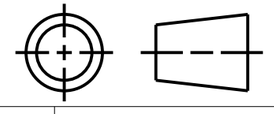

BANNER ENGINEERING CORP.
www.bannerengineering.com

TITLE

BT2 SERIES SS TERMINATED

SIZE	DRAWING NO.	REV.
B	161908	B

SCALE 3:2 | SHEET 2 OF 3

CREO

MODEL NO.	"L"	"BL"	"D"	P/N
BTI9S	108	7.5 ±.5	.062	83029
BT26.3S	75	7.5 ±.5	.125	23834
BTI.52.5S	30	7.5 ±.5	.090	23865
BT.75I.5S	18	7.5 ±.5	.046	00000
BT22IS	252	7.5 ±.5	.125	24445
BT224S	288	7.5 ±.5	.125	24446
BT227S	324	7.5 ±.5	.125	24447
BT232S	384	7.5 ±.5	.125	24448
BT236S	432	7.5 ±.5	.125	24449

NOTES:
1. ALL DIMENSIONS ARE MILLIMETERS [INCHES] UNLESS OTHERWISE NOTED.
2. REFER TO "www.bannerengineering.com" FOR ADDITIONAL DATA AND SPECIFICATIONS.

This drawing is the property of BANNER ENGINEERING CORP. Any use or reproduction, in any form, without prior written permission of Banner is prohibited.
© Banner Engineering Corp.

THIRD ANGLE PROJECTION

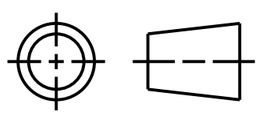

BANNER ENGINEERING CORP.
www.bannerengineering.com

TITLE

BT2 SERIES SS TERMINATED

SIZE	DRAWING NO.	REV.
B	161908	B
SCALE 5:4		SHEET 3 OF 3

CREO